800
(Gas/LPG)

(S/N 004000- 008399)

Sweeper Parts Manual

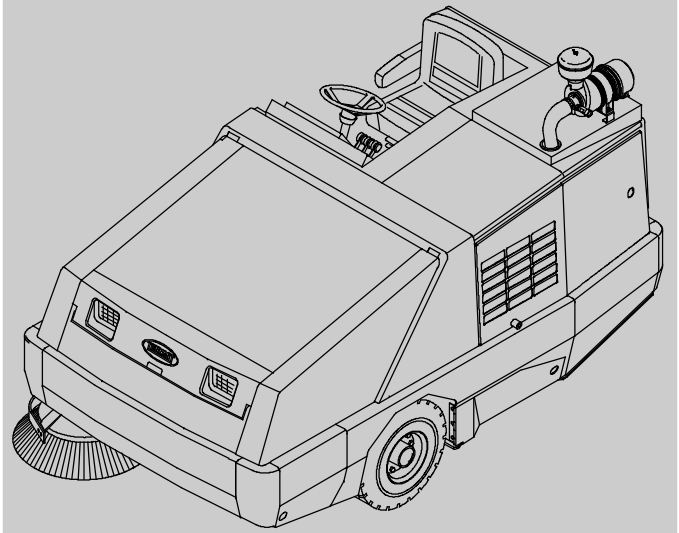

North America / International

For latest Parts manual and other language Operator manuals, visit:

www.tennantco.com/manuals

330120
Rev. 25 (5-2017)

When ordering replacement parts, use the illustrated parts list section in this manual. Before ordering parts or supplies, be sure to have your machine model number and serial number available. Only use TENNANT Company supplied or equivalent parts. Parts and supplies may be ordered online, by phone, or mail from any authorized parts and service center, distributor or from any of the manufacturer's subsidiaries.

This machine will provide excellent service. However, the best results will be obtained at minimum costs if:

- The machine is operated with reasonable care.
- The machine is maintained regularly - per the machine maintenance instructions provided.
- The machine is maintained with manufacturer supplied or equivalent parts.

MACHINE DATA

Please fill out at time of installation for future reference.

Model No. - _____

Serial No. - _____

Machine Options - _____

Sales Rep. - _____

Sales Rep. phone no. - _____

Customer Number - _____

Installation Date - _____

Tennant Company
PO Box 1452
Minneapolis, MN 55440
Phone: (800) 553- 8033
www.tennantco.com

II Speed and Thermo- Sentry are trademarks of Tennant Company.

Specifications and parts are subject to change without notice.

Original instructions, Copyright © 1998- 2000, 2002- 2005, 2007- 2011, 2013- 2017 TENNANT Company, Printed in U.S.A.

HOW TO USE THIS MANUAL

This section on *HOW TO USE THIS MANUAL* will tell you how to:

- Find important machine information for ordering correct repair parts.
- Find TENNANT part numbers.
- Order TENNANT parts and supplies.

IMPORTANT INFORMATION

When placing an order for parts, the machine model and machine serial number are important. Refer to the *MACHINE DATA* box which is filled out during the installation of your machine. The *MACHINE DATA* box is located on the inside of the front cover of this manual.

MACHINE DATA

Please fill out at time of installation for future reference.

Machine Model Number – 800

Machine Serial Number – _____

Machine Options – _____

TENNANT Representative/phone no. – _____

Customer ID Number – _____

Date of Installation – _____

Manual Number – 330120

Revision: 00

Published: 9-97

The model number of your machine is on the side of the machine.

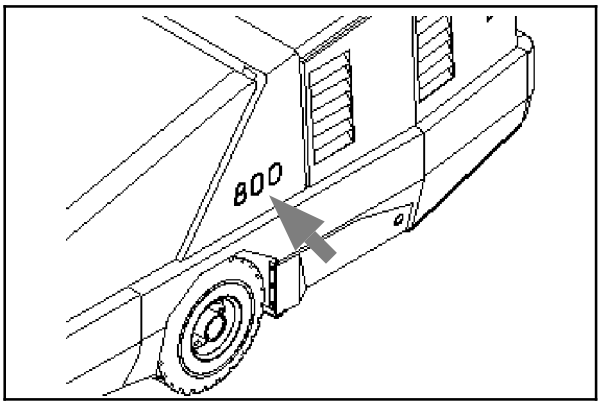

The serial number of your machine is printed on the machine data plate located as shown.

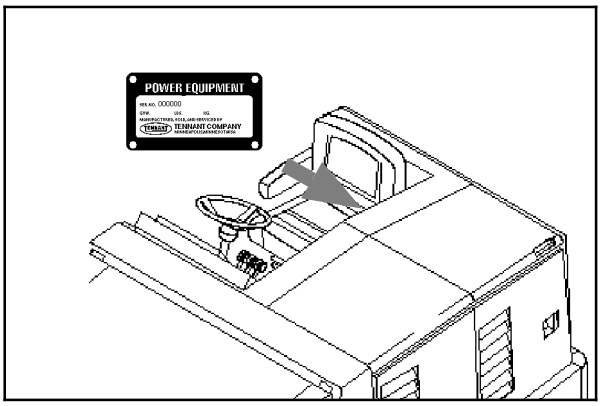

FINDING A TENNANT PART NUMBER

This manual contains the following sections:

- HOW TO USE THIS MANUAL
- STANDARD PARTS
- OPTIONS
- BREAKDOWNS
- PERKINS ENGINE BREAKDOWN
- CAT ENGINE BREAKDOWN
- CROSS REFERENCE

The STANDARD PARTS section lists repair parts for standard machines. They are grouped in this general order:

- General wear parts.
- Machine frame and related parts.
- Machine propelling system.
- Sweeping components.
- Electrical parts.

The OPTION section lists repair parts of options.

The BREAKDOWN section lists available repair parts of major components.

All sections in this manual consist of parts illustrations and corresponding parts lists.

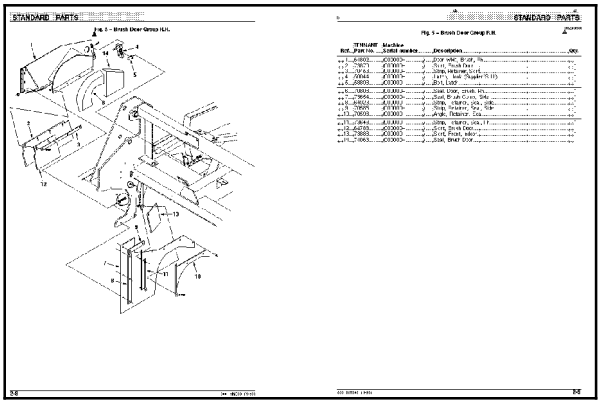

The parts illustrations are numbered with ***Ref*** numbers which refer to corresponding parts lists.

The parts lists include a number of columns of information:

- ***Ref*** - column refers to the reference number on the parts illustration.
  ∇ - indicates the part is an assembly.
  ▲ - indicates the part is included in the assembly listed just before it.

- ***TENNANT Part No.*** - column lists the TENNANT part number for the part.

- ***Serial Number*** - column indicates the set of machines the part number is applicable to. Serial numbers change when the machine design has been modified. The most current design of the machine is shown in the main illustration, older designs are boxed in a corner of the illustration.

- ***Description*** - column is a brief description of the part.

- ***Qty.*** - column lists the quantity of that part used in that area of the machine.

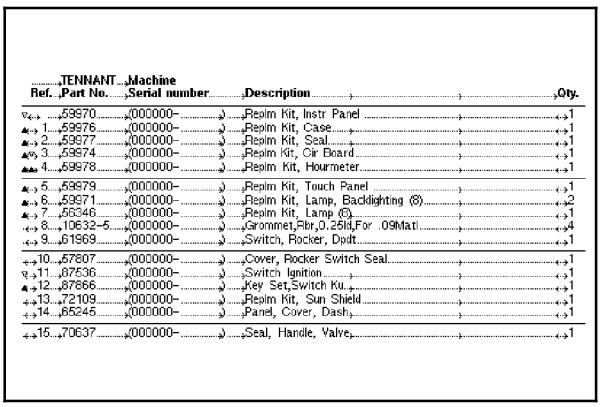

Ref.	TENNANT Part No.	Machine Serial number	Description	Qty.
∇	59970	000000–	Replm Kit, Instr Panel	1
▲ 1	59976	000000–	Replm Kit, Case	1
▲ 2	59977	000000–	Replm Kit, Seal	1
▲ 3	59974	000000–	Replm Kit, Cir Board	1
▲ 4	59978	000000–	Replm Kit, Hourmeter	1
▲ 5	59979	000000–	Replm Kit, Touch Panel	1
▲ 6	59971	000000–	Replm Kit, Lamp, Backlighting (8)	2
▲ 7	56346	000000–	Replm Kit, Lamp (8)	1
8	10632–5	000000–	Grommet,Rbr,0.25Id,For .09Mat	4
9	61969	000000–	Switch, Rocker, Dpdt	1
10	57807	000000–	Cover, Rocker Switch Seal	1
11	87536	000000–	Switch Ignition	1
12	87866	000000–	Key Set,Switch Ku	1
13	72109	000000–	Replm Kit, Sun Shield	1
14	85245	000000–	Panel, Cover, Dash	1
15	70637	000000–	Seal, Handle, Valve	1

NOTE: If a service kit is installed on your machine, be sure to keep the INSTRUCTION BULLETIN which came with the kit. It contains repair parts numbers needed for ordering future parts.

NOTE: Fasteners used in this machine may be metric or non-metric. Take care when replacing hardware to replace with same thread size.

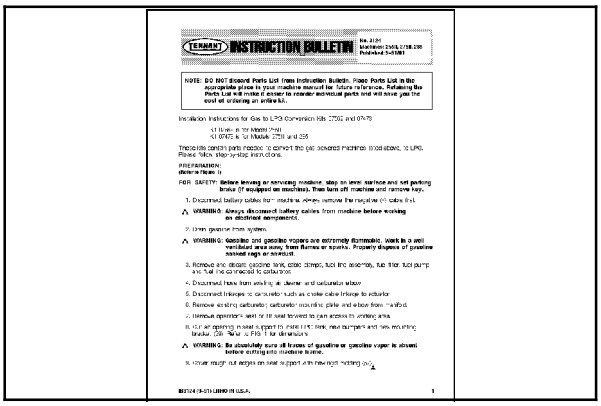

TENNANT INSTRUCTION BULLETIN

No. 31254
Machines: 2555, 2758, 295
Published: 5-31-01

NOTE: DO NOT discard Parts List from Instruction Bulletin. Place Parts List in the appropriate place in your machine manual for future reference. Retaining the Parts List will make it easier to reorder individual parts and will save you the cost of ordering an entire kit.

Installation Instructions for Gas to LPG Conversion Kits 27202 and 07479

<1 Kit for Model 2555
<1 07479 is for Models 2758 and 295

These kits contain parts needed to convert the gas powered machines listed above, to LPG. Please follow step-by-step instructions.

PREPARATION:
(Before Place 1)

FOR SAFETY: **Before leaving or servicing machine, stop on level surface and set parking brake (if equipped on machine). Then turn off machine and remove key.**

1. Disconnect battery cables from machine. Always remove the negative (-) cable first.

⚠ **WARNING: Always disconnect battery cables from machine before working on electrical components.**

2. Drain gasoline from system.

⚠ **WARNING: Gasoline and gasoline vapors are extremely flammable. Work in a well ventilated area away from flames or sparks. Properly dispose of gasoline soaked rags or sawdust.**

3. Remove and discard gasoline tank, cable clamps, fuel line assembly, fuel filter, fuel pump and fuel line connected to carburetor.
4. Disconnect hose from existing air cleaner and carburetor elbow.
5. Disconnect linkages to carburetor such as cable cable linkage to actuator.
6. Remove existing carburetor, carburetor mounting plate and elbow from manifold.
7. Remove operator's seat or tilt seat forward to gain access to working area.
8. Cut air opening in seat support to make LPG tank, new bumpers and new mounting bracket. (29) Refer to FIG. 1 for dimensions.

⚠ **WARNING: Be absolutely sure all traces of gasoline or gasoline vapor is absent before cutting into machine frame.**

9. Cover rough cut edges on seat support with new rigid molding (24).

BIS124 (9-97) LIBRO IN U.S.A. 1

PLACING AN ORDER

Orders may be placed by phone, fax, or by mail. Phone orders may need written confirmation. Follow the steps below to insure prompt delivery:

1. Identify the model number of your machine.
2. Identify the serial number of your machine.
3. Find the part number of the part you need. Do not order by page number or reference number. If you are not able to find the part number, call your TENNANT representative for help or send the old part as a sample.
4. Determine the quantity of the part you need.
5. Provide the following company information:
   - Company name
   - Customer ID Number
   - Shipping address
   - Billing address
   - First and last name of person ordering parts
   - Telephone number
   - Purchase order number
6. Provide definitive shipping instructions.

Any claim for loss or damage to a shipment in transit should be filed promptly with the transportation company making the delivery. Shipments will be complete unless the packing list or order acknowledgement indicates items back ordered.

If parts received are suspected to be incorrect or defective, please contact the TENNANT representative from whom you ordered the part. They will give authorization for return and/or handle replacement shipments when required.

SECTION 2

Contents **Page**

Fig. 1 - General Recommended Maintenance Items 2-4
Fig. 2 - Brushes, Replacement 2-5
Fig. 3 - Main Frame Skirt and Seals Group 2-6
Fig. 4 - Main Frame Left Brush Door Group . . . 2-8
Fig. 5 - Main Frame Right Brush Door Group . 2-10
Fig. 6 - Main Frame Operator Station Group . 2-12
Fig. 7 - Seat Group 2-14
Fig. 8 - Main Frame Top Engine Cover and Horn Group 2-16
Fig. 9 - Main Frame Rear Engine Door Group 2-18
Fig. 10 - Main Frame Engine Side Door Group (004000-006999) 2-20
Fig. 11 - Main Frame Engine Side Door Group (007000-) 2-22
Fig. 12 - Hopper Lift Arms Group 2-24
Fig. 13 - Hopper Lift Cylinders Group 2-26
Fig. 14 - Hopper Group 2-28
Fig. 15 - Hopper Door Group 2-30
Fig. 16 - Hopper Cover Group 2-32
Fig. 17 - Hopper Bumper Group 2-34
Fig. 18 - Hopper Filter Shaker Group 2-36
Fig. 19 - Hopper Pressure Switch Group 2-38
Fig. 20 - Engine and Alternator Group (004000-004936) 2-40
Fig. 21 - Engine Mount Group (004000-004936) 2-42
Fig. 22 - Engine Group (004937-005999) 2-44
Fig. 23 - Engine Group (006000-006999) 2-46
Fig. 24 - Engine Group (007000-) . . . 2-48
Fig. 25 - Engine Alternator Group (004937-005999) 2-52
Fig. 26 - Engine Alternator Group (006000-006999) 2-54
Fig. 27 - Engine Alternator Group (007000-) 2-56
Fig. 28 - Engine Oil Filter and Drain Group (004937-) 2-58
Fig. 29 - Engine Carburetor and Governor Group, Gasoline (004000-004936) . 2-60
Fig. 30 - Engine Electronic Fuel Ignition Group, Gas (004937-005999) 2-62
Fig. 31 - Engine Electronic Fuel Ignition Group, Gas (006000-006999) 2-64
Fig. 32 - Engine Electronic Fuel Ignition Group, Gas (007000-) 2-66
Fig. 33 - Engine Carburetor and Governor Group, LPG (004000-004936) 2-68
Fig. 34 - Engine Vaporizer Group, LPG (004000-004818) 2-70
Fig. 35 - Engine Vaporizer Group, LPG (004819-004936) 2-72
Fig. 36 - Engine Electronic Fuel Ignition and Vaporizer Group, LPG (004937-005999) 2-74
Fig. 37 - Engine Electronic Fuel Ignition and Vaporizer Group, LPG (006000-006999) 2-78
Fig. 38 - Engine Electronic Fuel Ignition and Vaporizer Group, LPG (007000-007593) 2-82
Fig. 39 - Engine EFI Group, LPG (007594-) 2-86
Fig. 40 - Engine Vaporizer Group, LPG (007487-) 2-88
Fig. 41 - Engine Air Cleaner Group (004000-004936) 2-90
Fig. 42 - Engine Air Cleaner Group (004937-005999) 2-92
Fig. 43 - Engine Air Cleaner Group, Gas (006000-006999) 2-94
Fig. 44 - Engine Air Cleaner Group, Gas (007000-) 2-96
Fig. 45 - Engine Air Cleaner Group, LPG (006000-006999) 2-98
Fig. 46 - Engine Air Cleaner Group, LPG (007000-) 2-100
Fig. 47 - Engine Muffler Group (004000-004936) 2-102
Fig. 48 - Engine Muffler Group, Catalytic (004937-005999) 2-104
Fig. 49 - Engine Muffler Group, Catalytic (006000-006999) 2-106
Fig. 50 - Engine Muffler Group, Catalytic (007000-) 2-108
Fig. 51 - Engine Fuel Tank Group, Gas (004000-004936) 2-110
Fig. 52 - Engine Fuel Tank Group, Gas (004937-005999) 2-112
Fig. 53 - Engine Fuel Tank Group, Gas (006000-006999) 2-114
Fig. 54 - Engine Fuel Tank Group, Gas (007000-) 2-116
Fig. 55 - Engine Fuel Tank Group, LPG (004000-004936) 2-118
Fig. 56 - Engine Fuel Tank Group, LPG (004937-005999) 2-120
Fig. 57 - Engine Fuel Tank Group, LPG (006000-006999) 2-122
Fig. 58 - Engine Fuel Tank Group, LPG (007000-) 2-124
Fig. 59 - Engine Radiator Hose Group (004000-004936) 2-126
Fig. 60 - Engine Radiator Hose Group (004937-005999) 2-128

Contents **Page**

Fig. 61 - Engine Radiator Hose Group (006000- 006999) 2- 130
Fig. 62 - Engine Radiator Hose Group (007000-) 2- 132
Fig. 63 - Engine Radiator and Cooling Fan Group (004000- 006308) 2- 134
Fig. 64 - Engine Radiator and Cooling Fan Group (006309- 006999) 2- 136
Fig. 65 - Engine Radiator and Cooling Fan Group (007000-) 2- 138
Fig. 66 - Engine Battery Group (006000- 006999) 2- 140
Fig. 67 - Engine Battery Group (007000-) 2- 142
Fig. 68 - Wheel Group, Rear Drive 2- 144
Fig. 69 - Wheels and Brakes Group, Front . . . 2- 146
Fig. 70 - Wheel Assembly 2- 148
Fig. 71 - Brake Pedals Group 2- 150
Fig. 72 - Directional Pedal Group 2- 152
Fig. 73 - Hydraulic Pumps Group 2- 154
Fig. 74 - Hydraulic Schematic 2- 156
Fig. 75 - Hydraulic Hose Group (004000- 004936) 2- 158
Fig. 76 - Hydraulic Hose Group (004937-) 2- 160
Fig. 77 - Hydraulic Reservoir Group 2- 162
Fig. 78 - Hydraulic Filter and Cooler Group . . 2- 164
Fig. 79 - Hydraulic Solenoid Valve Group 2- 166
Fig. 80 - Hydraulic Lift Valve Group 2- 168
Fig. 81 - Side Brush Motor Group 2- 170
Fig. 82 - Side Brush Pivot Group 2- 172
Fig. 83 - Side Brush Lift Group 2- 174
Fig. 84 - Main Brush Drive Group 2- 178
Fig. 85 - Main Brush Lift Group 2- 180
Fig. 86 - Main Brush Adjustment Group 2- 182
Fig. 87 - Vacuum Fan Impeller Group 2- 184
Fig. 88 - Vacuum Fan Motor Group 2- 186
Fig. 89 - Steering Group 2- 188
Fig. 90 - Electrical Instrument Panel Assembly 2- 190
Fig. 91 - Electrical Circuit Breaker and Relay Group 2- 192
Fig. 92 - Electrical Schematic (004000- 004936) 2- 193
Fig. 93 - Electrical Schematic (004937- 005999) 2- 197
Fig. 94 - Electrical Schematic (006000-) 2- 202
Fig. 95 - Wire Harnesses Group, Gas/LPG, Main (004000- 004274) 2- 208
Fig. 96 - Wire Harnesses Group, Gas/LPG, Hopper (004000-) 2- 212
Fig. 97 - Wire Harnesses Group, Gas/LPG, Tail Lights (004000-) 2- 213
Fig. 98 - Wire Harnesses Group, Gas/LPG, Main (004275- 004936) 2- 214
Fig. 99 - Wire Harnesses Group, Gas/LPG, Main (004937-) 2- 218

Contents **Page**

Fig. 100 - Wire Harnesses Group, Gas/LPG Engine (006000- 006999) 2- 223
Fig. 101 - Wire Harnesses Group, Gas/LPG Injectors (006000- 006999) 2- 226
Fig. 102 - Wire Harnesses Group, Gas/LPG Engine (007000- 007593) 2- 227
Fig. 103 - Wire Harnesses Group, Gas/LPG Engine (007594-) 2- 228
Fig. 104 - Wire Harnesses Schematic, Gas Engine (007000-) 2- 229
Fig. 105 - Wire Harnesses Schematic, LPG Engine (007000-) 2- 232
Fig. 106 - Wire Harnesses Group, Gas/LPG Adaptor (006000- 006999) 2- 236
Fig. 107 - Wire Harnesses Group, Gas/LPG Adaptor (007000-) 2- 238
Fig. 108 - Label Group 2- 240

09922 - 800,G,LP

Fig. 1 - General Recommended Maintenance Items

	Ref.	Part No.	Serial Number		Description	Qty.
▽		77632	(004000-	)	Maintenance Kit, Skirts	1
▲		73870	(004000-	)	Skirt, Brush Door	2
▲		64788	(004000-	)	Skirt, Brush Door	2
▲		70453	(004000-	)	Strip, Retainer, Skirt	2
▲		62955	(004000-	)	Skirt, Seal, Main Brush	1
▲		62957	(004000-	)	Channel, Retainer, Seal, Rear	1
▲		62954	(004000-	)	Blade, Deflector	1
▲		62956	(004000-	)	Strap, Retainer, Seal	1
▲		43500	(004000-	)	Chain, Link#2/0, 7Links	1
▽		79032	(004000-	)	Maintenance Kit, Skirts 800	1
▲		64919	(004000-	)	Seal, Pan, Top	1
▲		64920	(004000-	)	Channel, Retainer	1
▲		73654	(004000-	)	Seal, Brush Comp, Side	2
▲		73888	(004000-	)	Skirt, Front, Indoor	2
▽		380709	(004000- 004936	)	Maintenance Kit, 400HR 800/810 gas	1
▲		39703- 2	(004000- 004936	)	Filter Element, Oil, Cont. Gas- SE	4
▲		60846	(004000- 004936	)	Spark Plug- 10 FD	4
▲		84883	(004000- 004936	)	Valve, PCV	1
▲		36050	(004000- 004936	)	Filter, Fuel	2
▲		60933	(004000- 006999	)	Element, Filter, Air	1
▲		60934	(004000- 006999	)	Element, Filter, Air	1
▽		380710	(004000- 004936	)	Maintenance Kit, 400HR 800/810 lpg	1
▲		39703- 2	(004000- 004936	)	Filter Element, Oil, Cont. Gas- SE	4
▲		60846	(004000- 004936	)	Spark Plug- 10 FD	4
▲		84883	(004000- 004936	)	Valve, PCV	1
▲		60933	(004000- 006999	)	Element, Filter, Air	1
▲		60934	(004000- 006999	)	Element, Filter, Air	1
▽		77634	(004000-	)	Maintenance Kit, 800HR 800/810	1
▲		34306	(004000-	)	Breather, Hyd 40Mic NO DS	1
▲		31613	(004000-	)	Strainer- Hyd Suction 25- 100- 03	1
▲		65221	(004000-	)	Element, Fltr, Hyd Oil	1
▲		1057711	(004000-	)	Oil, Hyd [El, Iso 100, 05gal]	3
		1057710	(004000-	)	Oil, Hyd [El, Iso 100, 01gal]	1
		1057707	(004000-	)	Oil, Hyd [El, Iso 32, 01gal]	1
		1057708	(004000-	)	Oil, Hyd [El, Iso 32, 05gal]	1
		393934	(004937- 006999	)	Sparkplug [Gm 3.0]	4
		9006586	(007000-	)	Sparkplug	4
		372652	(007000-	)	Element, Fltr, Air [Dn]	1
		372651	(007000-	)	Element, Fltr, Air	1
		16411	(004000-	)	Paint, Airdry, Off- White, 12oz	1
		16412	(004000-	)	Paint, Airdry, Teal, 12oz, Solid	1
		377540	(004000-	)	Paint, Airdry, Blk, 12oz	1
		377538	(004000-	)	Paint, Airdry, Gray, 12oz	1
		377537	(004000-	)	Paint, Airdry, Iron Gray, 12oz	1

Fig. 2 - Brushes, Replacement

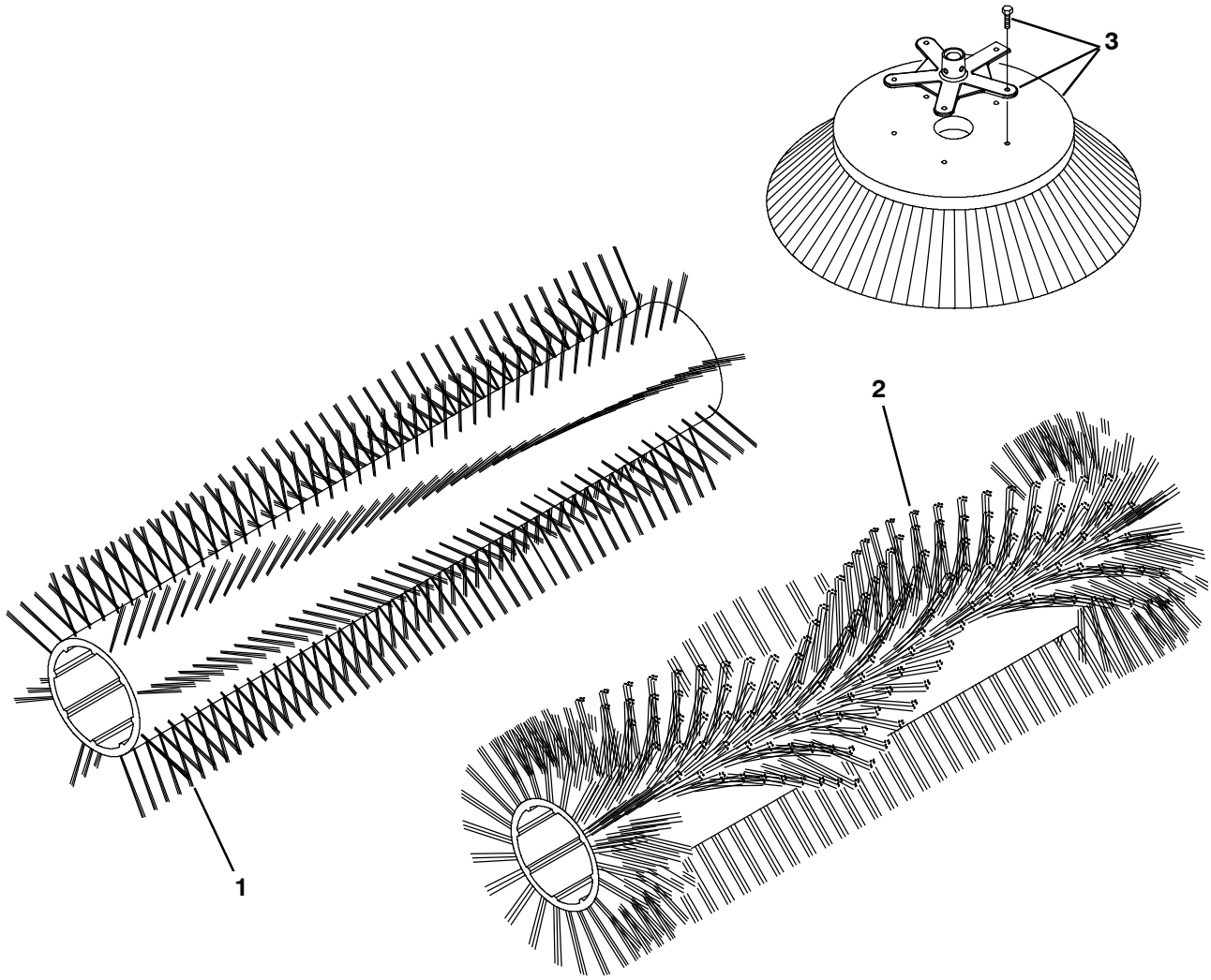

07628 - 800

	Ref.	Part No.	Serial Number		Description	Qty.
	1	35326	(004000-	)	Brush- Sweep - Polypropylene	1
	1	35324	(004000-	)	Brush- Sweep - Polypropylene&Wire	1
	1	35327	(004000-	)	Brush- Sweep - Wire	1
	1	35325	(004000-	)	Brush- Outsd - Polypropylene	1
	1	35336	(004000-	)	Brush- Patrl - Nylon	1
	1	35323	(004000-	)	Brush- Sweep - Nylon (24SR)	1
	1	66020	(004000-	)	Brush- Sweep - Nylon (8DR)	1
	2	370011	(004000-	)	Brush, Swp, Wedge, Polypropylene	1
▽	3	75011	(004000-	)	Brush- Side Swp - Assy- Nylon	1
▲		51021N	(004000-	)	Brush- Side Swp - Nylon	1
▲		1042969	(004000-	)	Hub, Drive, Brush, Side, 1.00b 8.8bc	1
▲		39394	(004000-	)	Screw, Hex, .31- 09 X 1.25, Wood	5
▽	3	75010	(004000-	)	Brush- Side Swp - Assy- Flat Wire	1
▲		51542	(004000-	)	Brush- Side Swp - Flat Wire	1
▲		1042969	(004000-	)	Hub, Drive, Brush, Side, 1.00b 8.8bc	1
▲		39394	(004000-	)	Screw, Hex, .31- 09 X 1.25, Wood	5
▽	3	70649	(004000-	)	Brush- Side Swp - Assy- Polypropylene	1
▲		70538	(004000-	)	Brush- Side Swp - Polypropylene	1
▲		1042969	(004000-	)	Hub, Drive, Brush, Side, 1.00b 8.8bc	1
▲		39394	(004000-	)	Screw, Hex, .31- 09 X 1.25, Wood	5

Fig. 3 - Main Frame Skirt and Seals Group

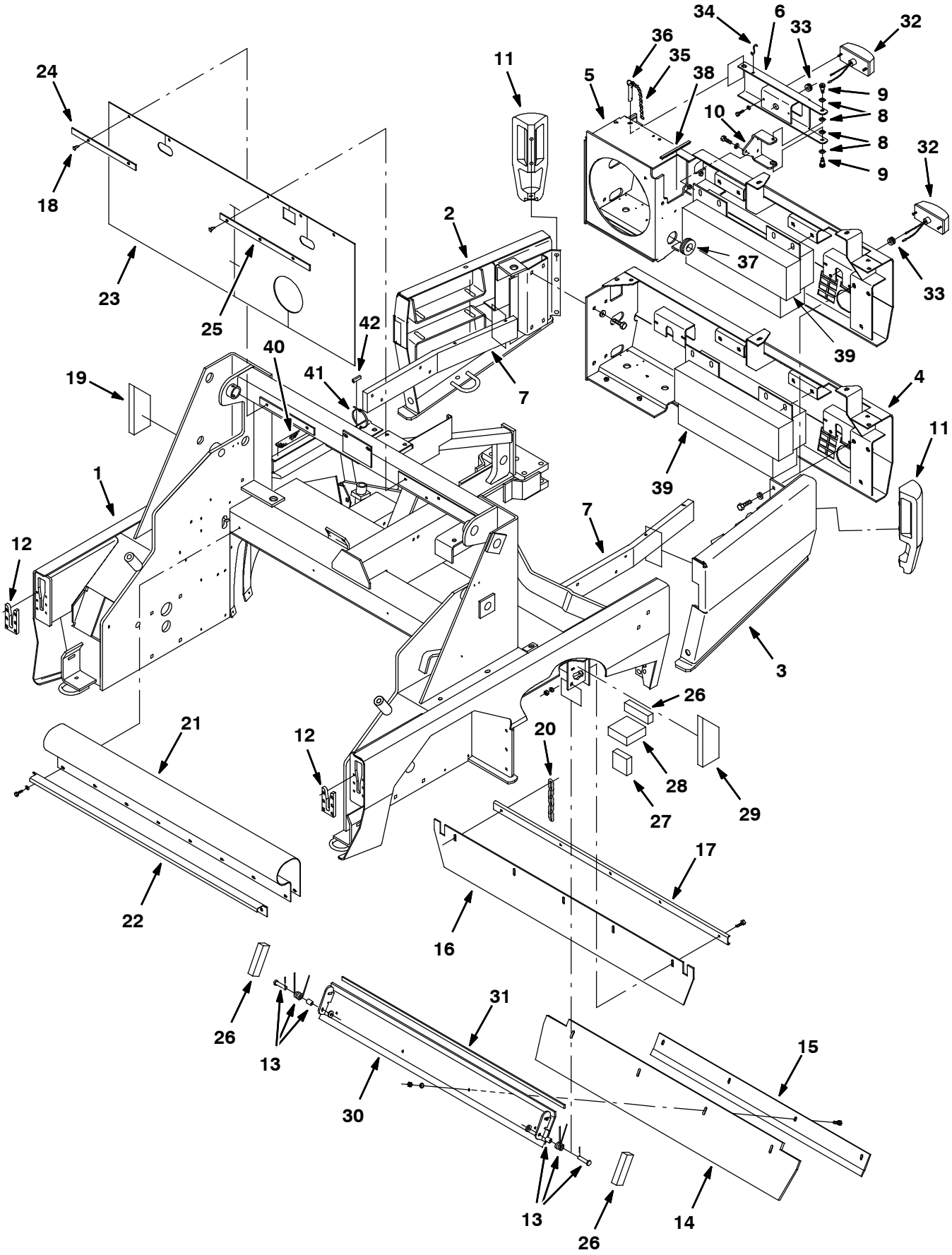

09800 - G,LP

Fig. 3 - Main Frame Skirt and Seals Group

	Ref.	Part No.	Serial Number	Description	Qty.
	1	77777	(004000- 008088)	Frame Wldt, Main [800l]	1
	1	1073839	(008089-)	Frame Wldt, Main [800l Gray]	1
	2	77782	(004000- 008088)	Panel Wldt, Rear, Rh	1
	2	1073840	(008089-)	Panel Wldt, Rear, Rh [800 Gray]	1
	3	77734	(004000- 008088)	Panel Wldt, Rear, Lh	1
	3	1073838	(008089-)	Panel Wldt, Rear, Lh [800 Gray]	1
	4	79680	(004000- 006999)	Bumper Wldt, Rear, Gas/Dsl	1
	4	1028300	(007000- 008088)	Bumper Wldt, Rear, Gas/Dsl	1
	4	1073805	(008089-)	Bumper Wldt, Rear, Gas/Dsl [800 Gray]	1
	5	1032075	(007000- 008088)	Bumper Wldt, Rear, Lpg	1
	5	1073807	(008089-)	Bumper Wldt, Rear, Lpg [800 Gray]	1
	6	77680	(004000-)	Door, Bmpr, Lpg	1
	6	1073836	(008089-)	Door, Bumper, Lpg [800 Gray]	1
	7	77593	(004000-)	Bracket, Frame, 1.0 X 3.50w	2
	8	86860	(004000-)	Washer, Thrust, 0.50b 0.87d 0.06w	4
	9	36758	(004000-)	Bolt, Shld, .50d X 0.50, .38- 16	2
	10	70517	(004000- 008088)	Bracket, Pivot, Hinge, Door, Lpg	1
	10	1073825	(008089-)	Bracket, Hinge, Door, Lpg [800 Gray]	1
	11	63544	(004000- 008088)	Bumper, Corner, Mach	2
	11	1073814	(008089-)	Bumper, Corner, Mach [800 Gray]	2
	12	63663	(004000-)	Guide, Align, Bmpr, Pye	2
	13	69904	(004000-)	Spring Assy Kit	1
	14	62954	(004000-)	Skirt, Neo, .06, 08.00w 53.38l, 04/ Sl	1
	15	62956	(004000-)	Retainer, Blade, Deflector	1
	16	62955	(004000-)	Skirt, Neo, .18, 07.75w 54.75l, 05/ Sl	1
	17	62957	(004000-)	Channel, .12, 1.5w 0.5 49.5l, 5/0.4h	1
	18	21168	(004000-)	Plug, Hole, Rnd, 0.25h 0.8l, Brb, Nyl	5
	19	74066	(004000-)	Insulation, Acstc, 1.0, 03.5 X 09.0 Cham	1
	20	43500	(004000-)	Chain, Coil, Str, 2/0, 09.0l 07 Link	1
	21	64919	(004000-)	Seal	1
	22	64920	(004000-)	Retainer, Seal, Pan Top	1
	23	73724	(004000-)	Shield, Dust, Front Firewall, Full	1
	24	70843	(004000-)	Retainer, Shield, Dust, Rh	1
	25	70844	(004000-)	Retainer, Shield, Dust, Lh	1
	26	74064	(004000-)	Insulation, Acstc, 1.0, 01.5 X 04.0	4
	27	73863	(004000-)	Insulation, Acstc, 1.0, 03.0 X 03.0	2
	28	73862	(004000-)	Insulation, Acstc, 1.5, 04.0 X 04.0	2
	29	74067	(004000-)	Insulation, Acstc, 1.0, 03.5 X 09.0 Cham	1
	30	73645	(004000-)	Channel Wldt, Mtg	1
	31	79010	(004000-)	Seal, Ure, 0.25, 0.50w 47.0l	1
▽	32	57941	(004000-)	Taillight, 12vdc, 6.0 X 2.5, Rwk 57940	2
▲		45780	(004000-)	Lamp, 12vdc, 0.5a, 04cp [#1157]	1
	33	87515	(004000-)	Grommet, Rbr, 0.50id, F/0.8h, .25 Matl	2
	34	43363	(004000-)	Hook, S, .13d 1.0l	1
	35	06121	(004000-)	Chain, Sash, 35, 06.0l 11 Link	1
	36	79608	(004000-)	Pin, Hitch, .500d X 1.00l, Pl	1
	37	74920	(004000-)	Grommet, Flexible, .25 06.0l	1
	38	79670	(004000-)	Grommet, Flexible, .25 24.0l	1
	39	79671	(004000-)	Weight, Counter, Gas/Lpg	1
	40	86798	(004000-)	Tread, Non- Skid, 01.4w 12.0l	1
	41	49263	(004000-)	Tie, Cable, Nyl, 11.4l .19w 3.0 Max D	1
	42	361160	(004000-)	Molding, Trim, Pvc, .08- .11 01.0l	1

Fig. 4 - Main Frame Left Brush Door Group

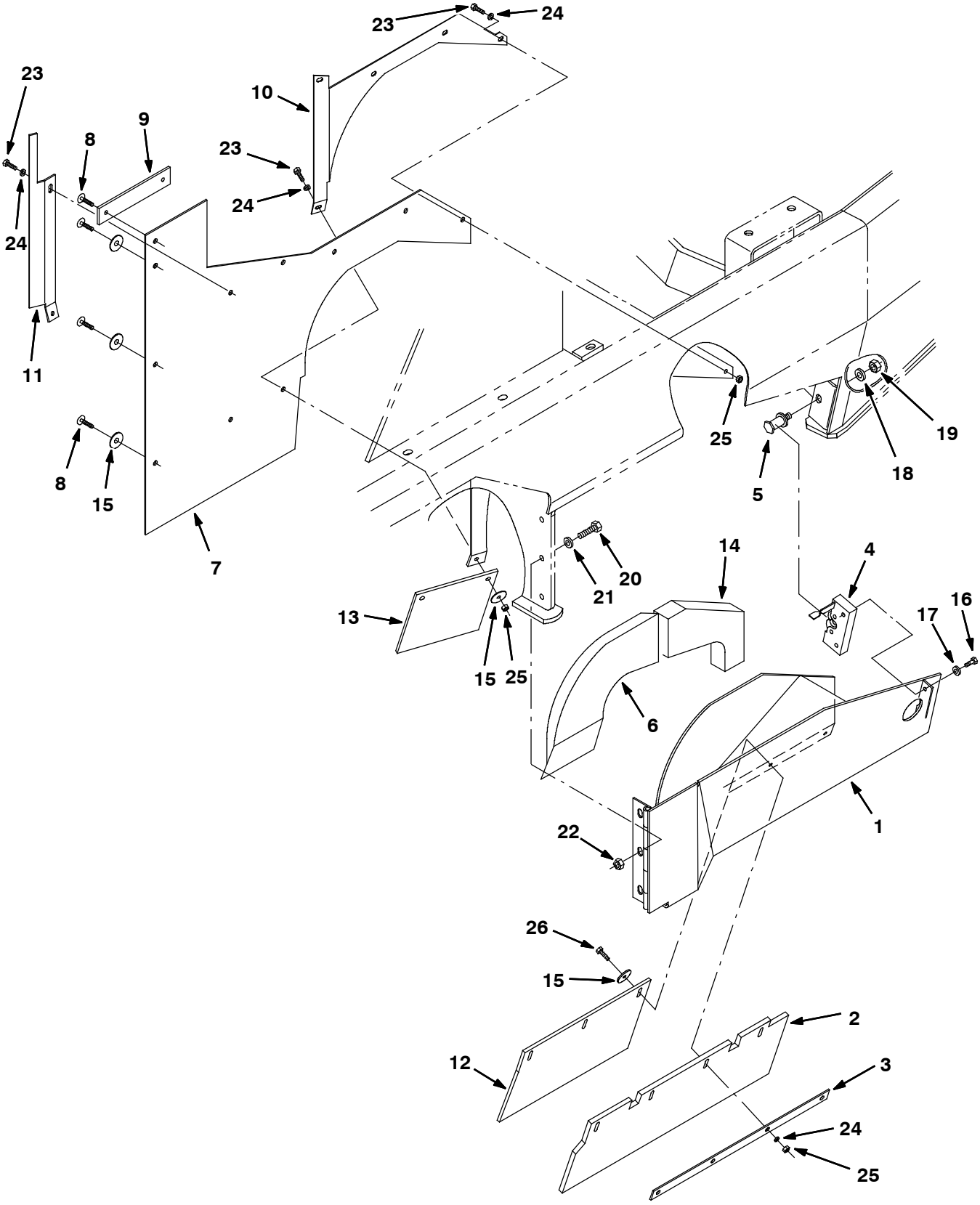

07583 - 800

Fig. 4 - Main Frame Left Brush Door Group

Ref.	Part No.	Serial Number	Description	Qty.
1	64801	(004000- 008088)	Door Wldt, Brush, Lh	1
1	1073817	(008089-)	Door Wldt, Brush, Lh [800 Gray]	1
2	73870	(004000-)	Skirt, Neo, .37, 07.50w 21.75l, 04/ Sl	1
3	70453	(004000-)	Retainer, Skirt, .12, 1.0w X 18.5l, Blk	1
4	58489	(004000-)	Latch	1
5	58898	(004000-)	Bolt, Latch, F/58489/58844	1
6	70809	(004000-)	Seal, Rbr, Clsd, 1.62, Door, Brush, Lh	1
7	73654	(004000-)	Seal, Brush, Side, Complt [800l]	1
8	21168	(004000-)	Plug, Hole, Rnd, 0.25h 0.8l, Brb, Nyl	5
9	21282	(004000-)	Retainer, Skirt, .08, 1.5w X 07.5l	1
10	70597	(004000-)	Retainer, Skirt, .07	1
11	73648	(004000-)	Retainer, Skirt, .12, 1.2w X 15.7l	1
12	64788	(004000-)	Skirt, Rbr, .25, 07.84w 13.50l, 03/ Sl	1
13	73888	(004000-)	Skirt, Rbr, .25, 07.45w 06.37l, 02/ Hole	1
14	74062	(004000-)	Insulation, Acstc, 1.5, 07.8 X 08.0 Ntch	1
15	41178	(004000-)	Washer, Flat, 0.25, Fendr	9
16	34323	(004000-)	Screw, Hex, .25- 20 X 0.75, Nl	2
17	41185	(004000-)	Washer, Flat, Belleville, .25	2
18	39346	(004000-)	Washer, Flat, 0.44, Std	1
19	43955	(004000-)	Nut, Hex, Std, .44- 14, 5	1
20	39283	(004000-)	Screw, Hex, M10 X 1.50 X 25, 8.8	3
21	32492	(004000-)	Washer, Flat, 0.38, Std	3
22	07792	(004000-)	Nut, Hex, Flng, M10 X 1.50	3
23	06944	(004000-)	Screw, Hex, M6 X 1.00 X 25, 8.8	5
24	32483	(004000-)	Washer, Flat, 0.25, Sae	14
25	08708	(004000-)	Nut, Hex, Lock, M6 X 1.00, Nl	11
26	06946	(004000-)	Screw, Hex, M6 X 1.00 X 35, 8.8	4

Fig. 5 - Main Frame Right Brush Door Group

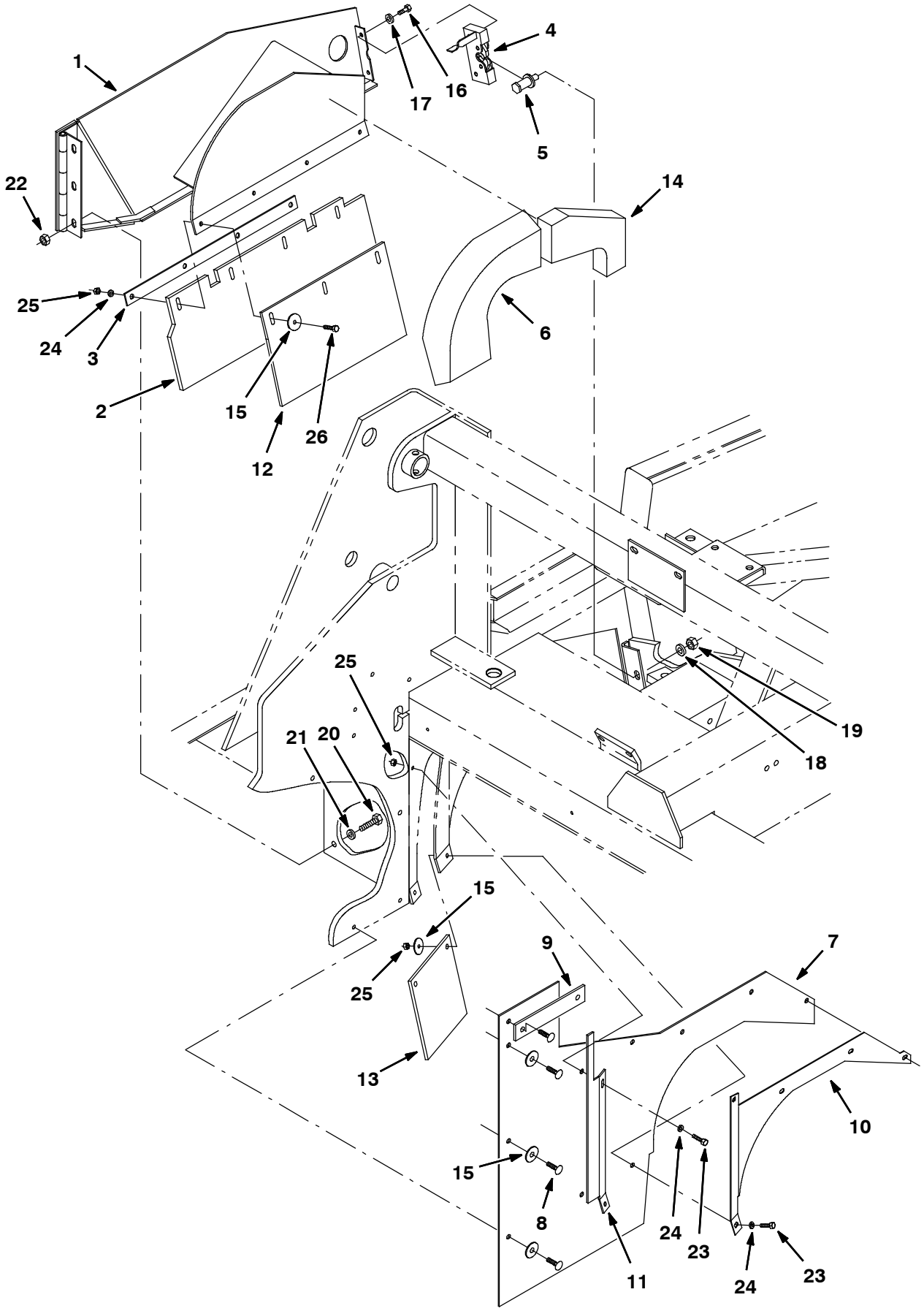

07584 - 800

Fig. 5 - Main Frame Right Brush Door Group

Ref.	Part No.	Serial Number	Description	Qty.
1	64802	(004000- 008088)	Door Wldt, Brush, Rh	1
1	1073818	(008089-)	Door Wldt, Brush, Rh [800 Gray]	1
2	73870	(004000-)	Skirt, Neo, .37, 07.50w 21.75l, 04/ Sl	1
3	70453	(004000-)	Retainer, Skirt, .12, 1.0w X 18.5l, Blk	1
4	58844	(004000-)	Latch	1
5	58898	(004000-)	Bolt, Latch, F/58489/58844	1
6	70808	(004000-)	Seal, Rbr, Clsd, 1.62, Door, Brush, Rh	1
7	73654	(004000-)	Seal, Brush, Side, Complt [800l]	1
8	21168	(004000-)	Plug, Hole, Rnd, 0.25h 0.8l, Brb, Nyl	5
9	21282	(004000-)	Retainer, Skirt, .08, 1.5w X 07.5l	1
10	70598	(004000-)	Retainer, Skirt, .07	1
11	73649	(004000-)	Retainer, Skirt, .12, 1.2w X 15.7l	1
12	64788	(004000-)	Skirt, Rbr, .25, 07.84w 13.50l, 03/ Sl	1
13	73888	(004000-)	Skirt, Rbr, .25, 07.45w 06.37l, 02/ Hole	1
14	74063	(004000-)	Insulation, Acstc, 1.5, 07.8 X 08.0 Cham	1
15	41178	(004000-)	Washer, Flat, 0.25, Fendr	9
16	34323	(004000-)	Screw, Hex, .25- 20 X 0.75, Nl	2
17	41185	(004000-)	Washer, Flat, Belleville, .25	2
18	39346	(004000-)	Washer, Flat, 0.44, Std	1
19	43955	(004000-)	Nut, Hex, Std, .44- 14, 5	1
20	39283	(004000-)	Screw, Hex, M10 X 1.50 X 25, 8.8	3
21	32492	(004000-)	Washer, Flat, 0.38, Std	3
22	07792	(004000-)	Nut, Hex, Flng, M10 X 1.50	3
23	06944	(004000-)	Screw, Hex, M6 X 1.00 X 25, 8.8	5
24	32483	(004000-)	Washer, Flat, 0.25, Sae	14
25	08708	(004000-)	Nut, Hex, Lock, M6 X 1.00, Nl	11
26	06946	(004000-)	Screw, Hex, M6 X 1.00 X 35, 8.8	4

Fig. 6 - Main Frame Operator Station Group

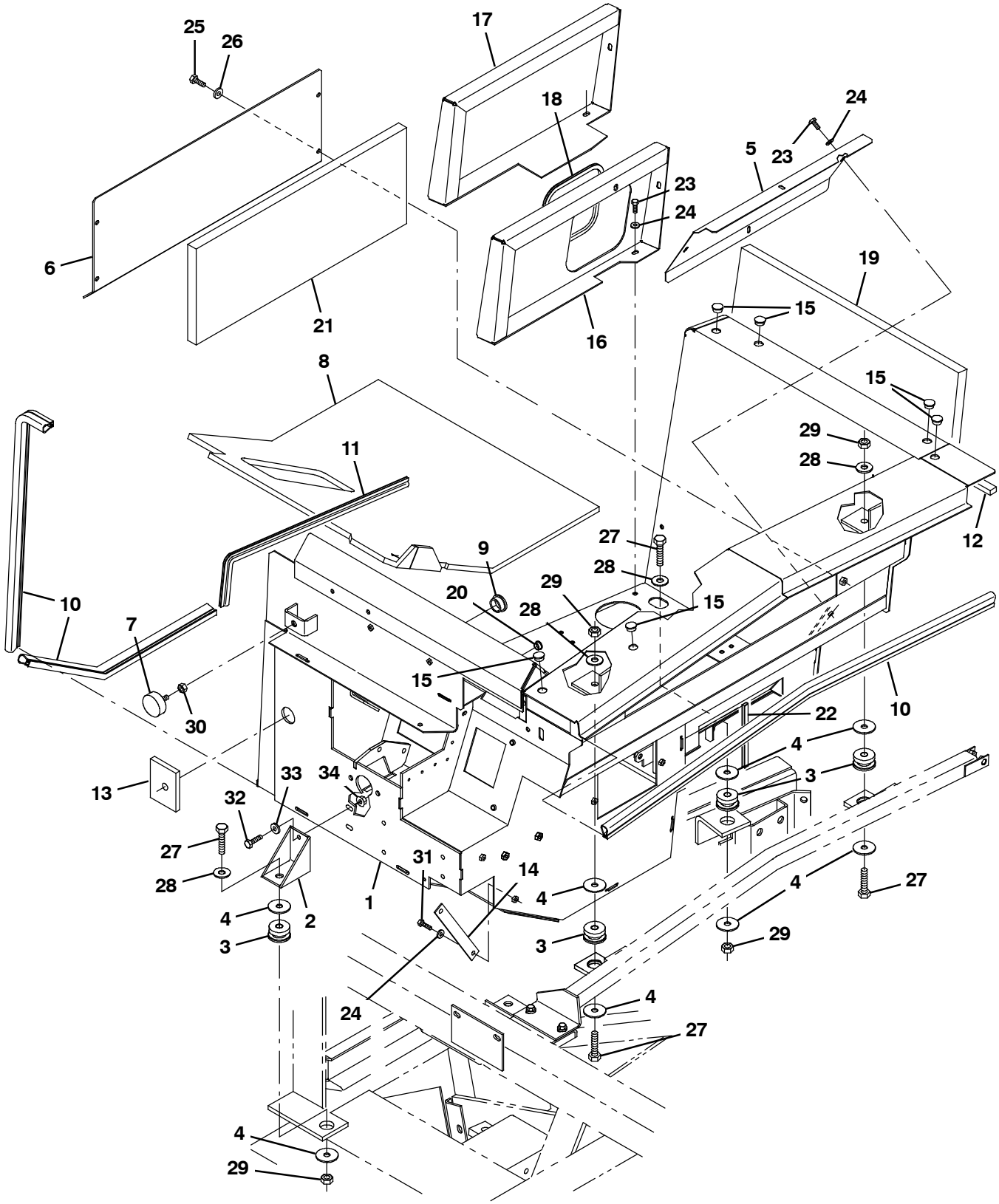

350667 - 800 G, LP

Fig. 6 - Main Frame Operator Station Group

Ref.	Part No.	Serial Number	Description	Qty.
1	380680	(004000- 008088)	Panel, Oprtr Station, W/ Label,[800l]	1
1	9012871	(008089-)	Panel, Oprtr Station, W/ Label[800 Gray]	1
2	63751	(004000-)	Bracket Wldt, Oprtr Station	1
3	51176	(004000-)	Isolator, Vib, .50d	4
4	04414	(004000-)	Washer, Flat, 0.53b 1.88d .12, Stl, Pl	8
5	64884	(004000- 008088)	Cover, Access, Oprtr Station, Side	1
5	1073819	(008089-)	Cover, Access, Oprtr Station, Side[Gray]	1
6	70450	(004000- 004439)	Cover, Access, Eng	1
6	375696	(004440- 008088)	Panel, Access, Eng, 27.0l X 10.8w	1
6	1073844	(008089-)	Panel, Access, Eng, 27.0l X 10.8w [Gray]	1
7	70756	(004000-)	Bumper, Rbr, 2.0d 0.75th .38- 16	1
8	76495	(004000-)	Pad, Rbr, Floormat, .44 27.0w 28.3l	1
9	76888	(004000-)	Plug, Hole, Rnd, 1.25h .03- .12, Blk Nyl	1
10	1050781	(004000-)	Seal, Afmkt, Bulb, 90, 1.33 08ft	1
11	1050775	(004000-)	Seal, Afmkt, Bulb, Str, 0.58d 03ft	1
12	74081	(004000-)	Seal, Rbr, Open, 0.50, 1.00w 60.0l	1
13	79028	(004000-)	Seal, Rbr, Clsd, 0.50, 3.0w 04.0l 1/H	1
14	76492	(004000- 008088)	Strip, Stl, 0.12 01.00w 08.30l	1
14	1073831	(008089-)	Bar, Stl, 0.12, 01.00 X 08.32l[800 Gray]	1
15	75428	(004000-)	Plug, Hole, Rnd, 0.75h .03- .12, Blk Nyl	7
16	380728	(004000- 008088)	Cover, Side, Fuel, Gas, W/ Label [800]	1
16	9012857	(008089-)	Cover, Side, Fuel, Gas, W/ Label[800b/G]	1
17	70704	(004000- 008088)	Panel, Side, Lpg [800l]	1
17	1074280	(008089-)	Panel, Side, Fuel Filler, Lpg [Gray]	1
18	380692	(004000-)	Molding, Trim, Pvc, .08- .11 26.5l	1
19	23946	(004000-)	Insulation, Acstc, 1.0, 26.5 X 27.3 Ntch	1
20	33806	(004000-)	Plug, Hole, Rnd, 0.38h .03- .12, Nyl[Wht]	1
21	375698	(004000-)	Insulation, Acstc, 1.0, 25.0 X 09.9	1
22	62595- 16	(007000-)	Molding, Trim, Pvc, .08- .11 08.5l	1
23	06943	(004000-)	Screw, Hex, M6 X 1.00 X 20, 8.8	9
24	19066	(004000-)	Washer, Flat, 0.25b 0.56d .05, Pl, 10	9
25	16931	(004000-)	Screw, Hex, M8 X 1.25 X 20, 8.8	4
26	39349	(004000-)	Washer, Flat, 0.31, Sae	4
27	06972	(004000-)	Screw, Hex, M12 X 1.75 X 60, 8.8	4
28	32493	(004000-)	Washer, Flat, 0.50, Std	4
29	08711	(004000-)	Nut, Hex, Lock, M12 X 1.75, Nl	4
30	32522	(004000-)	Nut, Hex, Jam, .38- 16	1
31	06944	(004000-)	Screw, Hex, M6 X 1.00 X 25, 8.8	2
32	39277	(004000-)	Screw, Hex, M8 X 1.25 X 25, 8.8	2
33	41186	(004000-)	Washer, Flat, Belleville, .31	2
34	07791	(004000-)	Nut, Hex, Flng, M8 X 1.25	2

Fig. 7 - Seat Group

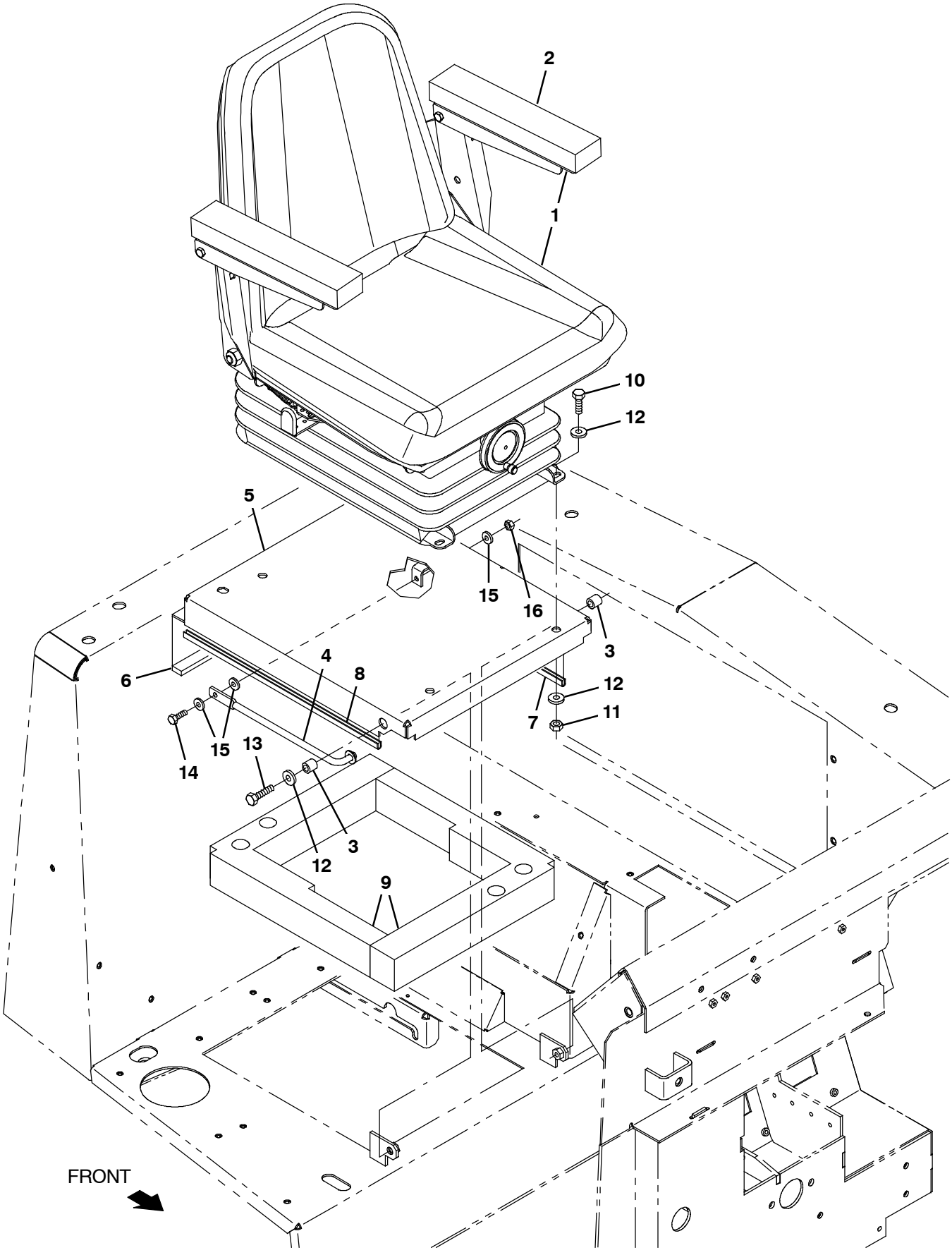

356578 - ALL

Fig. 7 - Seat Group

	Ref.	Part No.	Serial Number	Description	Qty.
▽	1	63294	(004000-)	Seat, Suspension [Seats Inc]	1
▲	2	311336	(004000-)	Cs, Armrest, Blk	1
	3	40716	(004000-)	Tube, 0.38id 0.62od 00.6l, Stl	2
	4	54615	(004000-)	Arm Wldt, Safety, Sppt, Seat, .38d 10.1l	1
	5	70478	(004000- 008088)	Support Wldt, Seat	1
	5	1073824	(008089-)	Support Wldt, Seat [800 Gray]	1
	6	44777	(004000-)	Seal, Rbr, Open, 0.31, 0.75w 14.8l Adh	1
	7	62595- 3	(004000-)	Molding, Trim, Pvc, .08- .11 05.8l	1
	8	62595- 2	(004000-)	Molding, Trim, Pvc, .08- .11 15.8l	1
	9	76285	(004000-)	Insulation, Acstc, 2.3, 13.5 X 13.5 Ntch	2
	10	39277	(004000-)	Screw, Hex, M8 X 1.25 X 25, 8.8	4
	11	08709	(004000-)	Nut, Hex, Lock, M8 X 1.25, Nl	4
	12	32491	(004000-)	Washer, Flat, 0.31, Std	10
	13	06955	(004000-)	Screw, Hex, M8 X 1.25 X 35, 8.8	2
	14	06943	(004000-)	Screw, Hex, M6 X 1.00 X 20, 8.8	1
	15	19066	(004000-)	Washer, Flat, 0.25b 0.56d .05, Pl, 10	3
	16	08708	(004000-)	Nut, Hex, Lock, M6 X 1.00, Nl	1

Fig. 8 - Main Frame Top Engine Cover and Horn Group

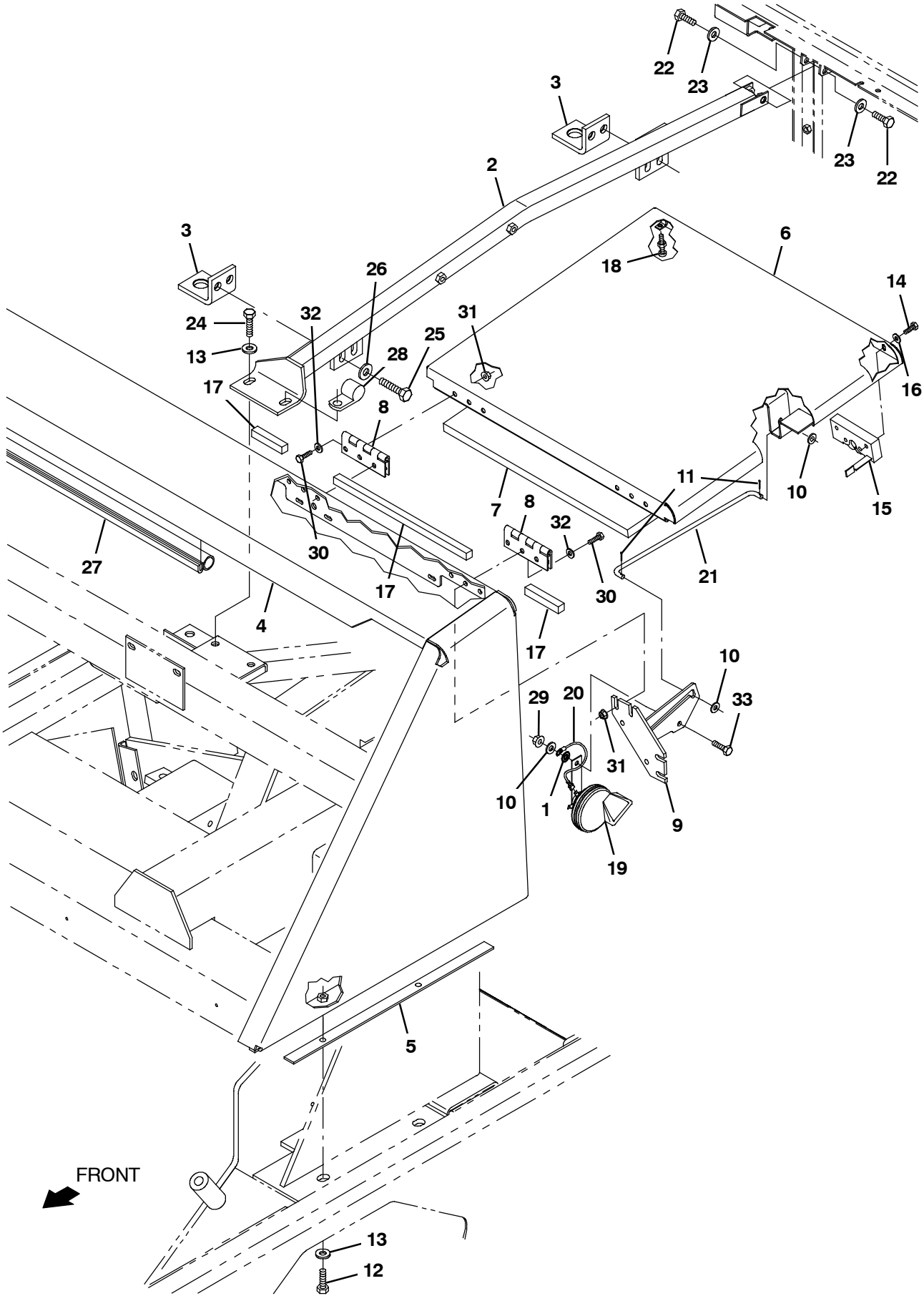

350669 - G, LP

Fig. 8 - Main Frame Top Engine Cover and Horn Group

Ref.	Part No.	Serial Number	Description	Qty.
1	41141	(004000-)	Washer, Lock, Int- Ext, 0.31	1
2	380533	(004000-)	Tube Wldt, Brace, Cntr	1
3	380532	(004000-)	Bracket, Brace, Cntr	2
4	64278	(004000- 008088)	Panel Wldt, Lntl	1
4	1073815	(008089-)	Panel Wldt, Lintel [800 Gray]	1
5	64279	(004000-)	Bar, Flat, Stl 0.18, 01.00 X 15.0l	2
6	75303	(004000- 008088)	Door Wldt, Eng, Top [800]	1
6	1073827	(008089-)	Door Wldt, Eng, Top [800 B/Green]	1
7	76870	(004000-)	Insulation, Acstc, 0.8, 20.3 X 19.3	1
8	74040	(004000-)	Hinge	2
9	21131	(004000-)	Bracket Wldt, Gasspring	1
10	32491	(004000-)	Washer, Flat, 0.31, Std	3
11	39005	(004000-)	Pin, Cotter, .094 X 0.75	2
12	39284	(004000-)	Screw, Hex, M10 X 1.50 X 35, 8.8	4
13	32492	(004000-)	Washer, Flat, 0.38, Std	5
14	34323	(004000-)	Screw, Hex, .25- 20 X 0.75, Nl	2
15	58844	(004000-)	Latch	1
16	32490	(004000-)	Washer, Flat, 0.25, Std	2
17	53461- 2	(004000-)	Seal, Rbr, Open, 0.63, 0.63w 24.5l	1
18	75128	(004000-)	Spindle, Adjustment	1
19	369704	(004000-)	Horn, 12vdc, Dba [Wolo]	1
20	70284	(004000-)	Wire, 16ga 06.0l Blk .25qf /.31ring	1
21	75883	(004000-)	Arm, Safety, Sppt, Cover, Eng, .31d 14.5	1
22	06961	(006009-)	Screw, Hex, M10 X 1.5	2
23	32485	(004000-)	Washer, Flat, 0.38, Sae	2
24	03192	(004000-)	Screw, Hex, M10 X 1.50 X 30, 8.8	1
25	06969	(004000-)	Screw, Hex, M12 X 1.75 X 40, 8.8	4
26	32486	(004000-)	Washer Flat,0.50,Sae	4
27	1050787	(004000-)	Seal, Afmkt, Bulb, 90, 1.33 03ft	1
28	58366	(004000-)	Clamp, Cable, Stl, 1.25d X 1.00w, 1hole	1
29	07791	(004000-)	Nut, Hex, Flng, M8 X 1.25	1
30	06944	(004000-)	Screw, Hex, M6 X 1.00 X 25, 8.8	12
31	07790	(004000-)	Nut, Hex, Flng, M6 X 1.00	12
32	41185	(004000-)	Washer, Flat, Belleville, .25	12
33	16931	(004000-)	Screw, Hex, M8 X 1.25 X 20, 8.8	1

Fig. 9 - Main Frame Rear Engine Door Group

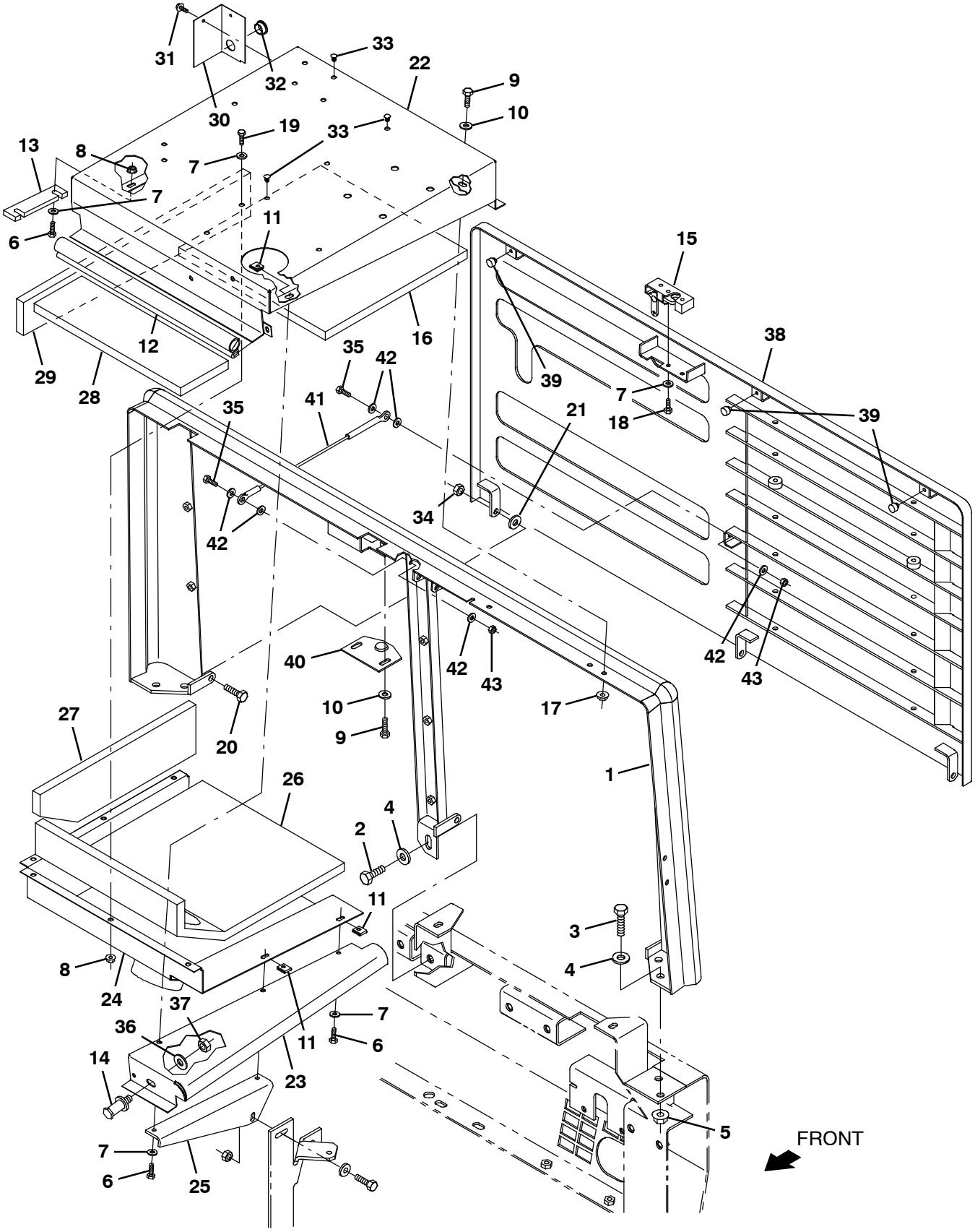

356440 - G, LP

Fig. 9 - Main Frame Rear Engine Door Group

Ref.	Part No.	Serial Number	Description	Qty.
1	64312	(004000- 008088)	Lintel Wldt, Rear	1
1	1073816	(008089-)	Lintel Wldt, Rear [800 B/Green]	1
2	41345	(004000-)	Screw, Hex, M12 X 1.75 X 25, 8.8	1
3	41346	(004000-)	Screw, Hex, M12 X 1.75 X 30, 8.8	4
4	32486	(004000-)	Washer Flat,0.50,Sae	5
5	07793	(004000-)	Nut, Hex, Flng, M12 X 1.75	4
6	06944	(004000-)	Screw, Hex, M6 X 1.00 X 25, 8.8	5
7	41185	(004000-)	Washer, Flat, Belleville, .25	13
8	07790	(004000-)	Nut, Hex, Flng, M6 X 1.00	8
9	16931	(004000-)	Screw, Hex, M8 X 1.25 X 20, 8.8	5
10	32491	(004000-)	Washer, Flat, 0.31, Std	5
11	12271	(004000-)	Nut, U, M6 X 1.00	3
12	1050786	(004000-)	Seal, Afmkt, Bulb, 90, 1.33 02ft	1
13	21230	(004000-)	Bar, Sppt, Eng Cover	1
14	59192	(004000-)	Latch, Bolt	1
15	59661	(004000-)	Latch	1
16	375537	(004000-)	Insulation, Acstc, 0.5, 17.0 X 15.0	1
17	07791	(004000-)	Nut, Hex, Flng, M8 X 1.25	3
18	25046	(004000-)	Screw, Hex, .25- 20 X 1.00, G5	2
19	06942	(004000-)	Screw, Hex, M6 X 1.00 X 16, 8.8	6
20	03192	(004000-)	Screw, Hex, M10 X 1.50 X 30, 8.8	3
21	32485	(004000-)	Washer, Flat, 0.38, Sae	3
22	1014456	(004000- 008088)	Panel Wldt, Cover, Eng, Top	1
22	1073804	(008089-)	Panel Wldt, Cover, Eng, Top[800 B/Green]	1
23	77711	(004000- 008088)	Cover, Eng, Top	1
23	1073837	(008089-)	Cover, Eng, Top [800 B/Green]	1
24	47958	(004000-)	Panel, Duct, Vacuum	1
25	375513	(004000-)	Bracket, Angle, Sppt, Hood	1
26	380761	(004000-)	Insulation, Acstc, 0.8, 18.0 X 15.0 C- O	1
27	380762	(004000-)	Insulation, Acstc, 0.8, 16.5 X 04.5 Cham	1
28	380763	(004000-)	Insulation, Acstc, 0.8, 15.5 X 05.0	1
29	380764	(004000-)	Insulation, Acstc, 0.8, 23.0 X 04.0	1
30	380760	(004000- 008088)	Panel, Corner, Cover, Eng	1
30	1073848	(008089-)	Panel, Corner, Cover, Eng [800 B/Green]	1
31	55845	(004000-)	Screw, Hex, M5 X 0.80 X 16, Fmg	1
32	82727	(004000-)	Plug, Hole, Rnd, 0.88h .03- .12, Blk Nyl	1
33	77399	(004000-)	Plug, Hole, Rnd, 0.24h 0.5l , Brb	11
34	41430	(004000-)	Nut, Hex, Lock, M10 X 1.5, Nl	3
35	06943	(004000-)	Screw, Hex, M6 X 1.00 X 20, 8.8	2
36	32486	(004000-)	Washer Flat,0.50,Sae	1
37	39313	(004000-)	Nut, Hex, Std, M12 X 1.75	1
38	48006	(004000- 008088)	Door Wldt, Access, Rear W/ Grill	1
38	1073811	(008089-)	Door Wldt, Access, Rear, W/ Grill [B/Gr]	1
39	51787	(004000-)	Bumper, Rbr, 0.6d 0.34th 0.3d Tip	3
40	65252	(004000-)	Plate, Strike	1
41	36192	(004000-)	Cable, Glv .13d 021.0l 330eye /330eye	1
42	19066	(004000-)	Washer, Flat, 0.25b 0.56d .05, Pl, 10	6
43	08708	(004000-)	Nut, Hex, Lock, M6 X 1.00, Nl	2

Fig. 10 - Main Frame Engine Side Door Group (004000-006999)

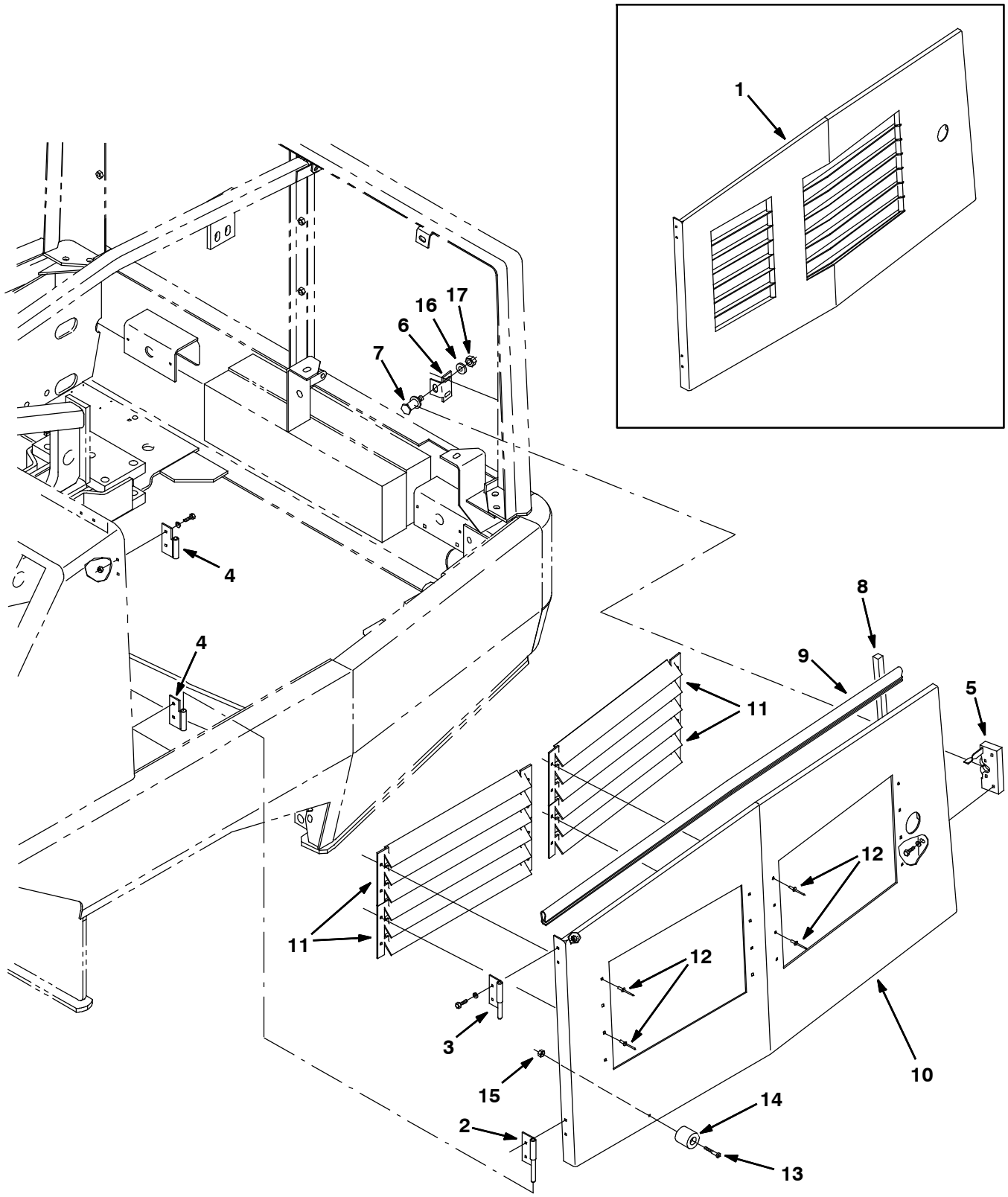

350680 - ALL

Fig. 10 - Main Frame Engine Side Door Group (004000- 006999)

Ref.	Part No.	Serial Number	Description	Qty.
1	23950	(004000- 004408)	Door Wldt, Eng, Side	1
2	64543	(004000- 006999)	Hinge Wldt, Door, Side, W/ Pin	1
3	70628	(004000- 006999)	Hinge Wldt, Side, W/ Pin	1
4	64545	(004000- 006999)	Hinge Wldt, W/ Tube	2
5	58489	(004000- 006999)	Latch	1
6	70407	(004000- 006999)	Angle, Bolt, Latch	1
7	59192	(004000- 006999)	Latch, Bolt	1
8	53461- 2	(004000- 006999)	Seal, Rbr, Open, 0.63, 0.63w 24.5l	1
9	57820	(004000- 006999)	Seal, Bulb, 90, 1.33 .06- .09grip 048.0l	1
10	375695	(004409- 006999)	Door Wldt	1
11	375693	(004409- 006999)	Panel, Louver	4
12	06524	(004409- 006999)	Rivet, Blind, .196d X 0.62 X .38d, Alm	16
13	09258	(004903- 006999)	Screw, Pan, Phl, M6 X 1.00 X 40, 4.8	1
14	44851	(004903- 006999)	Bumper, Rbr, 1.5d 1.50th 0.28h	1
15	08708	(004903- 006999)	Nut, Hex, Lock, M6 X 1.00, Nl	1
16	32493	(004000- 006999)	Washer, Flat, 0.50, Std	1
17	39313	(004000- 006999)	Nut, Hex, Std, M12 X 1.75	1

Fig. 11 - Main Frame Engine Side Door Group (007000-)

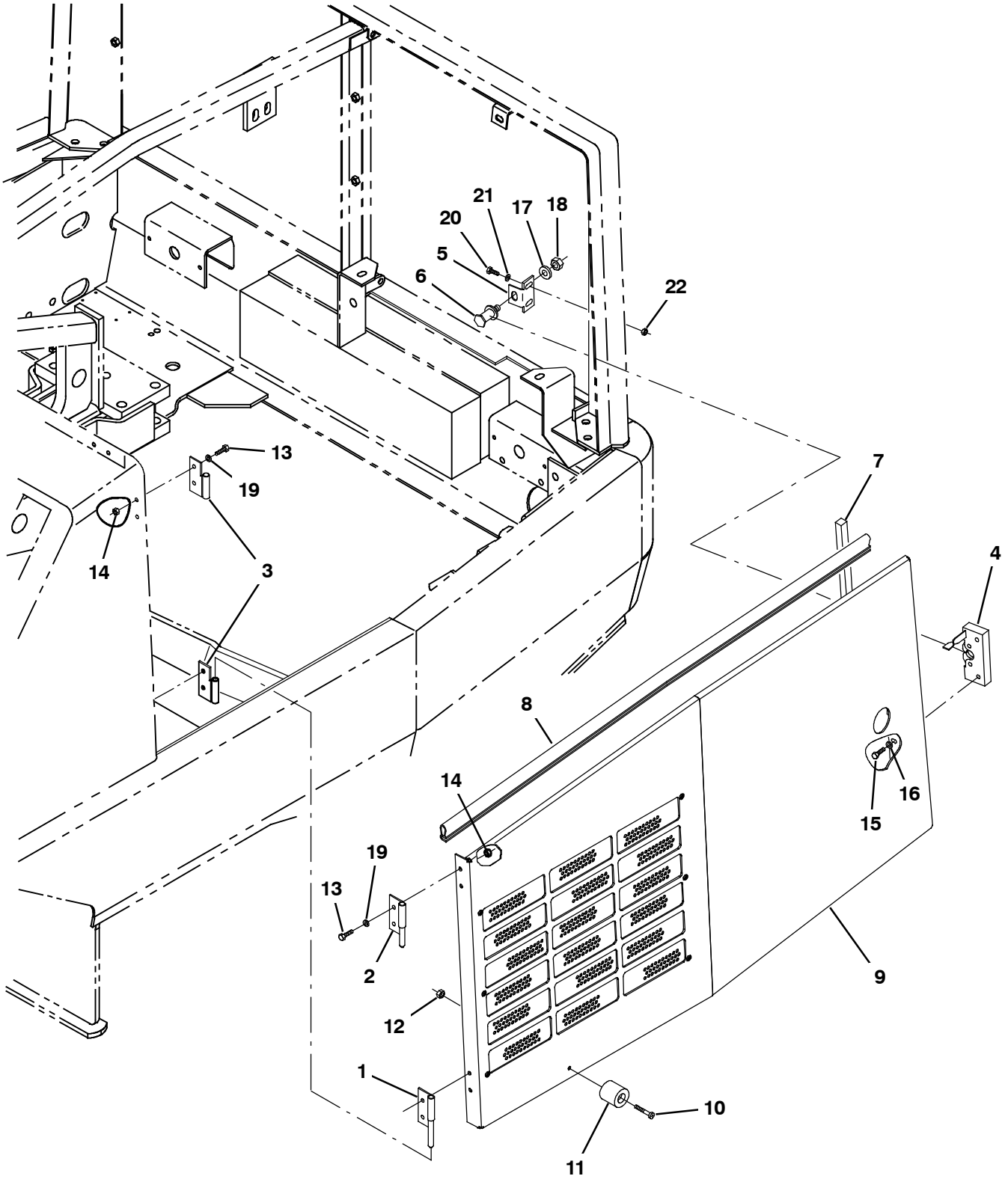

350680 - ALL

Fig. 11 - Main Frame Engine Side Door Group (007000-)

	Ref.	Part No.	Serial Number	Description	Qty.
	1	64543	(007000-)	Hinge Wldt, Door, Side, W/ Pin	1
	2	70628	(007000-)	Hinge Wldt, Side, W/ Pin	1
	3	64545	(007000-)	Hinge Wldt, W/ Tube	2
	4	58489	(007000-)	Latch	1
	5	70407	(007000- 008088)	Angle, Bolt, Latch	1
	5	1073822	(008089-)	Angle, Bolt, Latch [800 Gray]	1
	6	59192	(007000-)	Latch, Bolt	1
	7	53461- 2	(007000-)	Seal, Rbr, Open, 0.63, 0.63w 24.5l	1
	8	57820	(007000-)	Seal, Bulb, 90, 1.33 .06- .09grip 048.0l	1
▽	9	1046389	(007000- 008088)	Door Assy [800/810 08]	1
▲		9004327	(007000- 008088)	Screen Kit, Door, Side, Modif	1
▽	9	9012879	(008089-)	Door Assy [800 B/Green]	1
▲		9004327	(008089-)	Screen Kit, Door, Side, Modif	1
	10	09258	(007000-)	Screw, Pan, Phl, M6 X 1.00 X 40, 4.8	1
	11	44851	(007000-)	Bumper, Rbr, 1.5d 1.50th 0.28h	1
	12	08708	(007000-)	Nut, Hex, Lock, M6 X 1.00, Nl	1
	13	06943	(007000-)	Screw, Hex, M6 X 1.00 X 20, 8.8	8
	14	07790	(007000-)	Nut, Hex, Flng, M6 X 1.00	8
	15	34323	(007000-)	Screw, Hex, .25- 20 X 0.75, Nl	2
	16	32490	(007000-)	Washer, Flat, 0.25, Std	2
	17	32493	(007000-)	Washer, Flat, 0.50, Std	1
	18	39313	(007000-)	Nut, Hex, Std, M12 X 1.75	1
	19	41185	(007000-)	Washer, Flat, Belleville, .25	8
	20	16931	(007000-)	Screw, Hex, M8 X 1.25 X 20, 8.8	2
	21	32491	(007000-)	Washer, Flat, 0.31, Std	2
	22	39311	(007000-)	Nut, Hex, Std, M8 X 1.25	2

Fig. 12 - Hopper Lift Arms Group

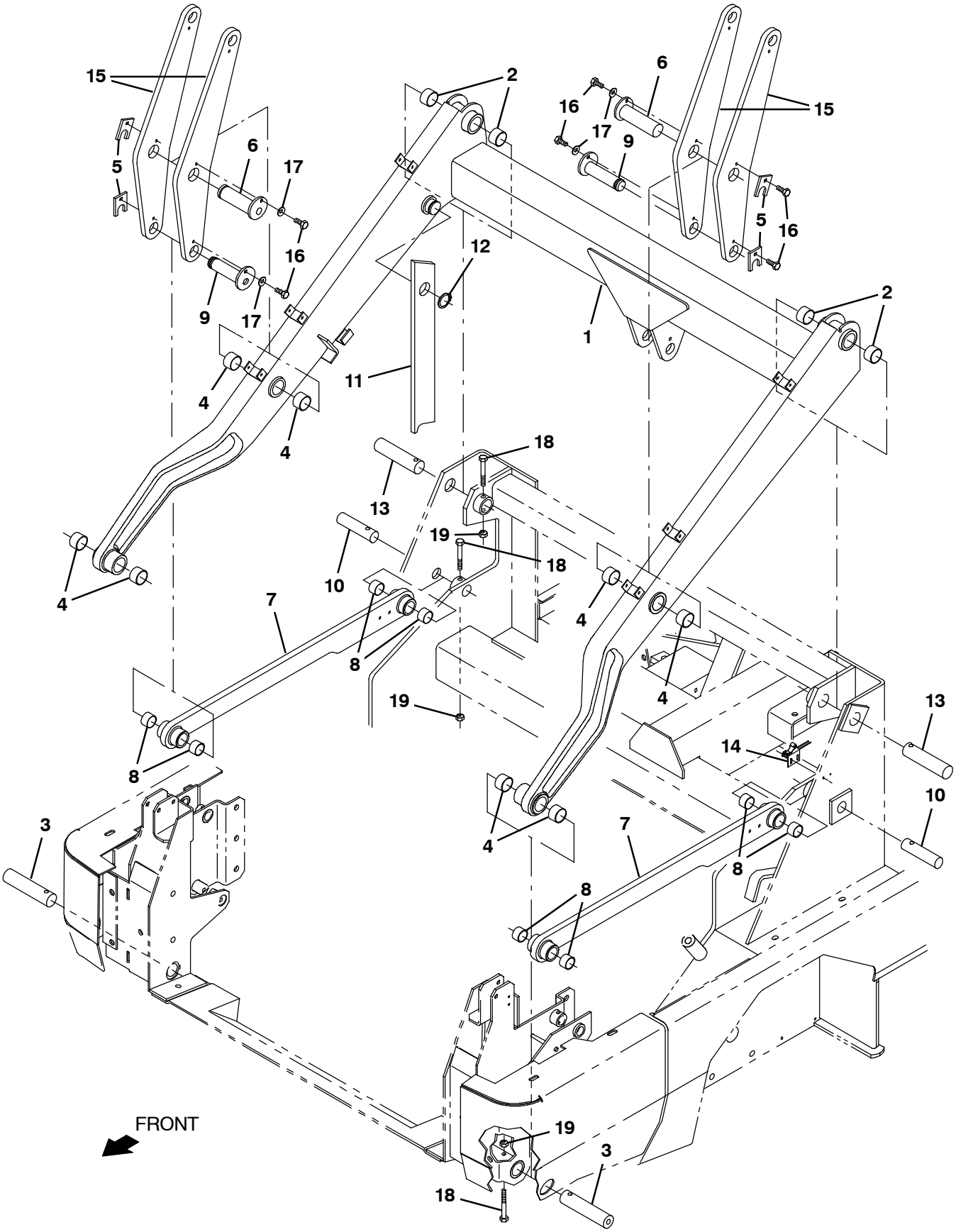

07574 - JP, NA

Fig. 12 - Hopper Lift Arms Group

Ref.	Part No.	Serial Number	Description	Qty.
1	75861	(004000-)	Arm, Lift, Hppr, W/ Label [800l]	1
2	58293	(004000-)	Bushing, Sleeve, 1.51b 1.66d 1.00l, Tef	4
3	77463	(004000-)	Pin, 1.50d 07.4l, 1/.44h, Stl	2
4	58293	(004000-)	Bushing, Sleeve, 1.51b 1.66d 1.00l, Tef	8
5	83554	(004000-)	Plate, Retainer, Pin	4
6	83551	(004000-)	Pin Wldt	2
7	1053518	(004000-)	Arm, Lift, Hppr, Lower	2
8	57936	(004000-)	Bushing, Sleeve, 1.25b 1.41d 1.00l, Tef	2
9	83553	(004000-)	Pin Wldt	2
10	76470	(004000-)	Pin, 1.25d 05.4l, 1/.44h, Stl	2
11	380681	(004000-)	Arm, Safety, Hppr, W/ Label [800]	1
12	63926	(004000-)	Ring, Retaining, Ext, 1.50d, Hd	1
13	76471	(004000-)	Pin, 1.50d 06.9l, 1/.44h, Stl	2
14	59965	(004000-)	Switch, Snap, 15a No, Rlr	1
15	83549	(004000-)	Link, Head, Vacuum, Rh, .50 1.50w 23.0l	4
16	10959	(004000-)	Screw, Hex, M10 X 1.50 X 20, Nl, Ss	8
17	32492	(004000-)	Washer, Flat, 0.38, Std	4
18	06964	(004000-)	Screw, Hex, M10 X 1.50 X 70, 8.8	4
19	41430	(004000-)	Nut, Hex, Lock, M10 X 1.5, Nl	4

Fig. 13 - Hopper Lift Cylinders Group

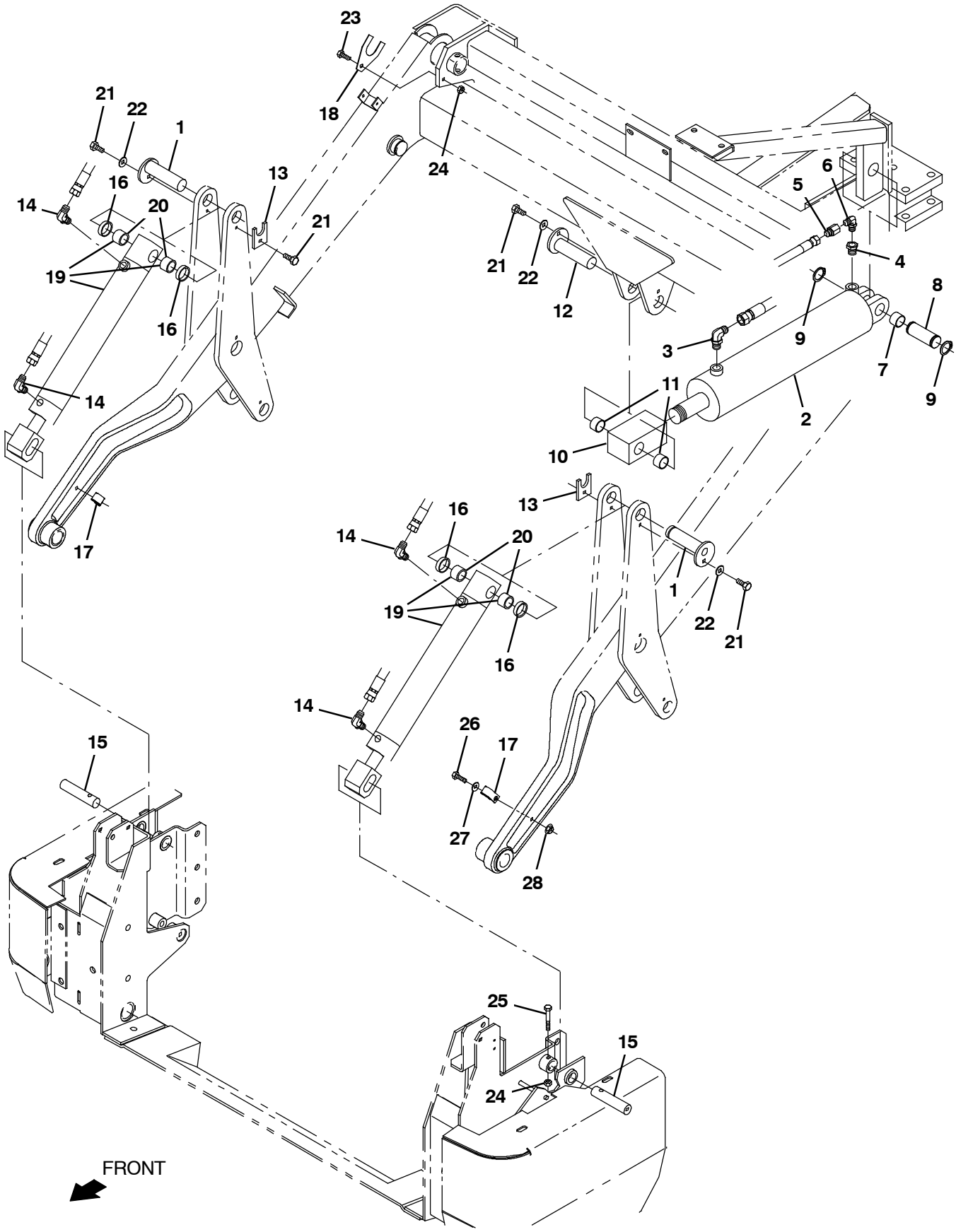

07585 - ALL

Fig. 13 - Hopper Lift Cylinders Group

	Ref.	Part No.	Serial Number	Description	Qty.
	1	83551	(004000-)	Pin Wldt	2
	2	1026719	(004000-)	Cylinder, Hyd, 4.0b 29.1l 14.50strk 2500	1
	3	47512	(004000-)	Fitting, Hyd, E90, Jm06/Om08	1
	4	55686	(004000-)	Fitting, Hyd, Str, Jm04/Om08	1
	5	16456	(004000-)	Fitting, Hyd, Rst, Jf04/Jm04, .063	1
	6	39210	(004000-)	Fitting, Hyd, E90, Jf04/Jm04	1
	7	59866	(004000-)	Bushing, Sleeve, 1.25b 1.40d 1.00l, Fgl	1
	8	63583	(004000-)	Pin, Grvd, 1.25d 03.50l	1
	9	58359	(004000-)	Retainer, Ring	2
	10	64156	(004000-)	Rod- End, 1.31- 16 Fem 1.4h	1
	11	57936	(004000-)	Bushing, Sleeve, 1.25b 1.41d 1.00l, Tef	2
	12	83553	(004000-)	Pin Wldt	1
	13	83554	(004000-)	Plate, Retainer, Pin	2
	14	47638	(004000-)	Fitting, Hyd, E90, Jm04/Om06	4
	15	63584	(004000-)	Pin, 1.00d 04.5l, 1/.38h, 1/M8x1.25, Stl	2
	16	83555	(004000-)	Tube, 1.28id 1.50od 00.4l, Stl	4
	17	69234	(004000-)	Clamp, Cable, Stl, 1.00d X 0.75w, 1hole	2
	18	75891	(004000-)	Plate, Spacer	2
▽	19	1042110	(004000-)	Cylinder, Hyd, 2.0b 23.8l 14.90strk 2500	2
▲	20	57936	(004000-)	Bushing, Sleeve, 1.25b 1.41d 1.00l, Tef	2
	21	10959	(004000-)	Screw, Hex, M10 X 1.50 X 20, Nl, Ss	5
	22	32492	(004000-)	Washer, Flat, 0.38, Std	3
	23	39277	(004000-)	Screw, Hex, M8 X 1.25 X 25, 8.8	2
	24	08709	(004000-)	Nut, Hex, Lock, M8 X 1.25, Nl	4
	25	06957	(004000-)	Screw, Hex, M8 X 1.25 X 60, 8.8	2
	26	76570	(004000-)	Screw, Hex, M8 X 1.25 X 30, 8.8	2
	27	32491	(004000-)	Washer, Flat, 0.31, Std	2
	28	07791	(004000-)	Nut, Hex, Flng, M8 X 1.25	2

Fig. 14 - Hopper Group

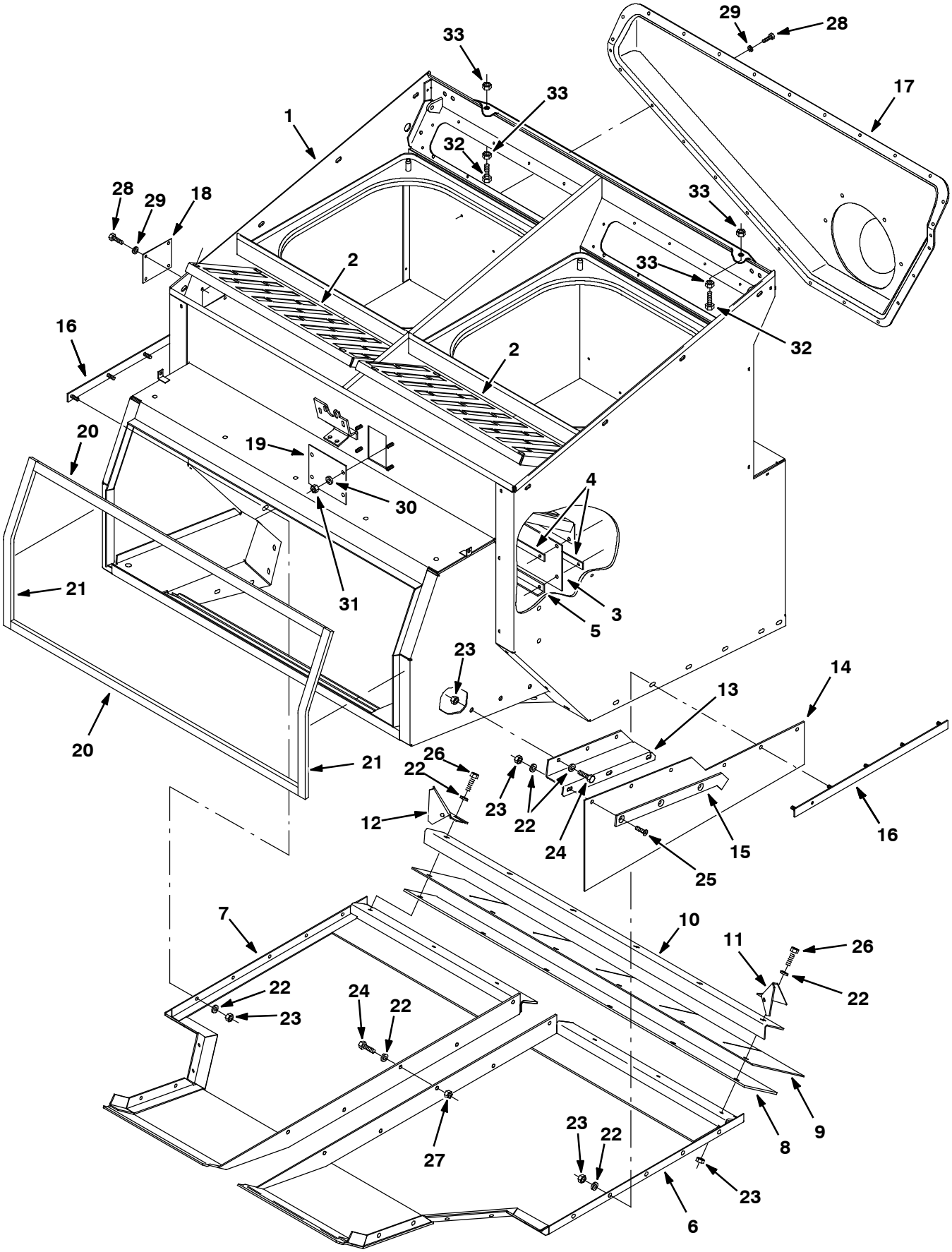

07573 - 800

Fig. 14 - Hopper Group

Ref.	Part No.	Serial Number	Description	Qty.
1	1074688	(004000-)	Hopper, Afmkt [800]	1
2	63665	(004000-)	Panel, Perma- Filter, Upper	2
3	63667	(004000-)	Seal, Dust	1
4	63668	(004000-)	Retainer, Seal, Dust, .12 X 0.8w X 48.4l	2
5	63669	(004000-)	Angle, Mtg, .19 1.00 X 1.00 48.4l 6/.30h	1
6	76474	(004000- 008088)	Panel, Hppr, Bottom, Lh	1
6	1073940	(008089-)	Panel, Hppr, Bottom, Lh [800 B/Green]	1
7	76384	(004000- 008088)	Panel, Hppr, Bottom, Rh	1
7	1073939	(008089-)	Panel, Hppr, Bottom, Rh [800 B/Green]	1
8	73678	(004000-)	Skirt, Neo, .18, 05.62w 48.37l, 06/ Sl	1
9	73679	(004000-)	Skirt, Neo, .12, 08.25w 48.37l, 06/ Sl	1
10	63647	(004000-)	Retainer, Skirt, .12, 3.2w X 48.2l, Blk	1
11	74046	(004000-)	Panel, Deflector, Dirt, Rh	1
12	74045	(004000-)	Panel, Deflector, Dirt, Lh	1
13	73772	(004000-)	Bracket, Mtg, Skirt	1
14	73771	(004000-)	Skirt, Neo, .12, Angle, 31.23l, 06/ Hole	1
15	73749	(004000-)	Retainer, Blade, Deflector, Front	1
16	79139	(004000-)	Retainer, Skirt, .12, 1.0w X 21.7l,White	2
17	70388	(004000-)	Cover, Duct, Inlet, Vacfan	1
18	74069	(004000-)	Cover, Access, Side Hppr	1
19	73887	(004000-)	Cover, Access, Front Hppr	1
20	79597	(004000-)	Seal, Ure, 0.88, 1.00w 43.3l Adh	2
21	79600	(004000-)	Seal, Ure, 0.88, 1.00w 18.1l Adh	2
22	01685	(004000-)	Washer, Flat, 0.38b 0.88d .08, Ss	27
23	08713	(004000-)	Nut, Hex, Lock, M8 X 1.25, Nl, Ss	22
24	09740	(004000-)	Screw, Hex, M8 X 1.25 X 20, Ss	18
25	79506	(004000-)	Screw, Flt, Soc, M8 X 1.25 X 30, Ss	3
26	09011	(004000-)	Screw, Hex, M8 X 1.25 X 30, Ss	6
27	07791	(004000-)	Nut, Hex, Flng, M8 X 1.25	15
28	74455	(004000-)	Screw, Hex, M6 X 1.00 X 12, Fmg	33
29	19066	(004000-)	Washer, Flat, 0.25b 0.56d .05, Pl, 10	33
30	39349	(004000-)	Washer, Flat, 0.31, Sae	4
31	08709	(004000-)	Nut, Hex, Lock, M8 X 1.25, Nl	4
32	06972	(004000-)	Screw, Hex, M12 X 1.75 X 60, 8.8	2
33	39313	(004000-)	Nut, Hex, Std, M12 X 1.75	4

Fig. 15 - Hopper Door Group

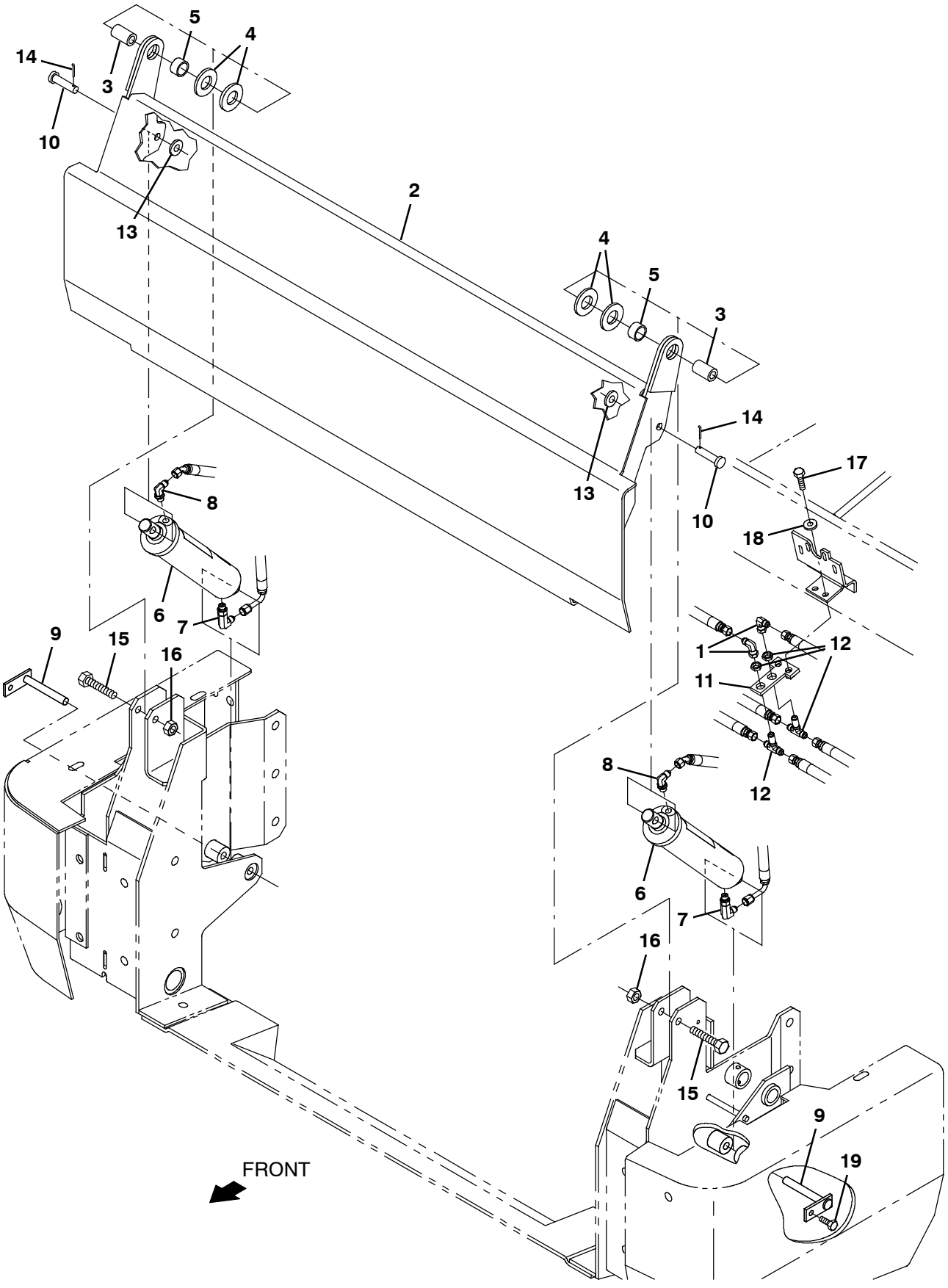

07575 - ALL

Fig. 15 - Hopper Door Group

Ref.	Part No.	Serial Number	Description	Qty.
1	39210	(004000-)	Fitting, Hyd, E90, Jf04/Jm04	2
2	83618	(004000- 008088)	Door Wldt, Dump, Hppr, Front	1
2	1073841	(008089-)	Door Wldt, Dump, Hppr, Front [800 Gray]	1
3	79138	(004000-)	Tube, 0.53id 1.00od 01.4l, Stl [Q]	2
4	79596	(004000-)	Washer	4
5	35688	(004000-)	Bushing, Sleeve, 1.00b 1.25d 0.49l, Fgl	2
6	1041090	(004000-)	Cylinder, Hyd, 2.0b 12.0l 08.00strk 2500	2
7	82825	(004000-)	Fitting, Hyd, E90, Jm04/Om04, Long	2
8	77097	(004000-)	Fitting, Hyd, E90, Jm04/Om04	2
9	64893	(004000-)	Pin Wldt	2
10	21722	(004000-)	Pin, Clevis, 0.50d X 2.25l [1141 Stl]	2
11	75012	(004000-)	Bracket, Mtg, Ftg	1
12	34392	(004000-)	Fitting, Hyd, Tee, Jm04/Jm04/Jm04,Bh Br	2
13	32486	(004000-)	Washer Flat,0.50,Sae	4
14	08182	(004000-)	Pin, Cotter, .125 X 1.00	2
15	06973	(004000-)	Screw, Hex, M12 X 1.75 X 70, 8.8	2
16	08713	(004000-)	Nut, Hex, Lock, M8 X 1.25, Nl, Ss	2
17	39277	(004000-)	Screw, Hex, M8 X 1.25 X 25, 8.8	2
18	32491	(004000-)	Washer, Flat, 0.31, Std	2
19	16931	(004000-)	Screw, Hex, M8 X 1.25 X 20, 8.8	2

Fig. 16 - Hopper Cover Group

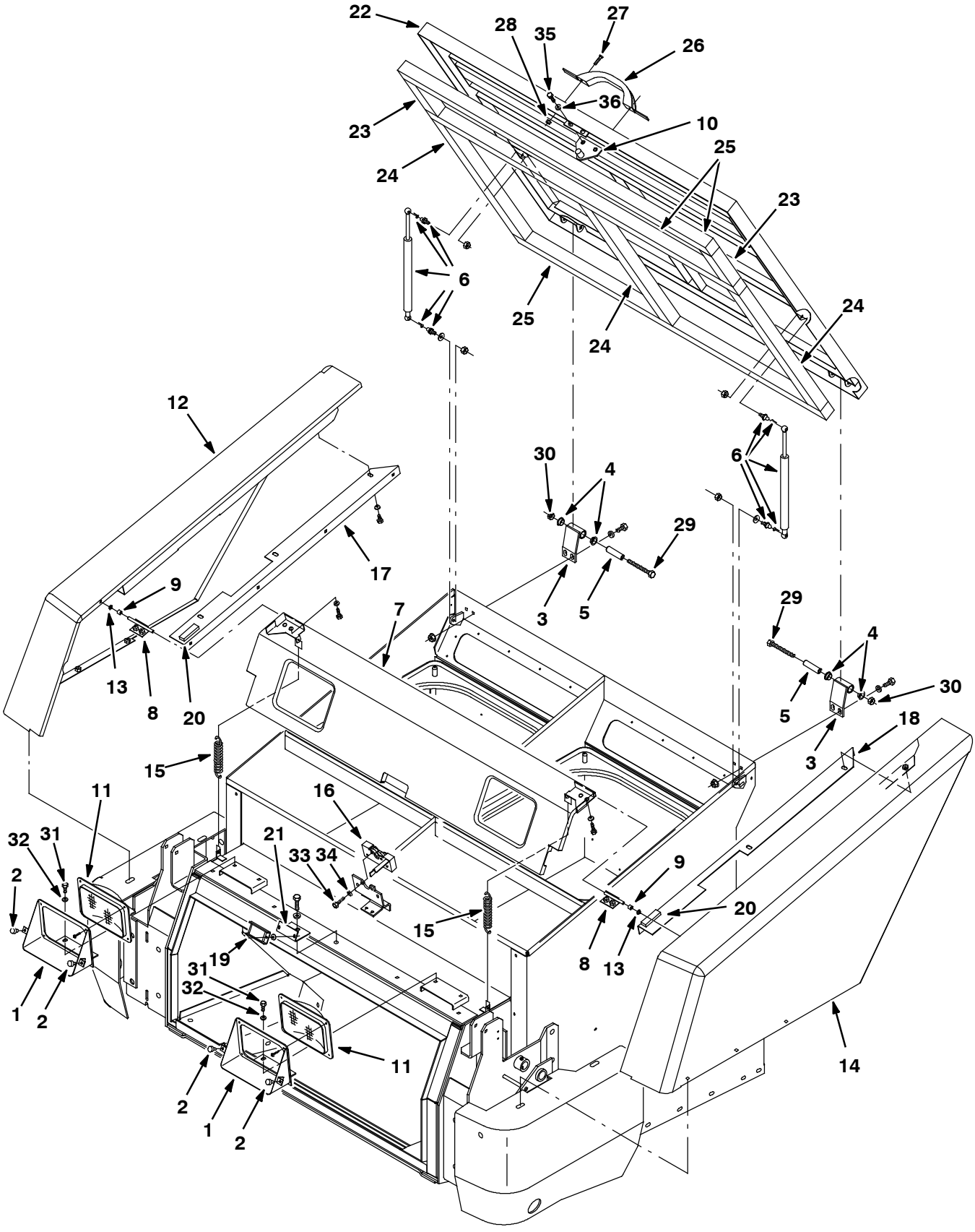

07577 - NA

Fig. 16 - Hopper Cover Group

	Ref.	Part No.	Serial Number	Description	Qty.
	1	77388	(004000- 008088)	Bracket Wldt, Mtg, Headlight	2
	1	1073832	(008089-)	Bracket Wldt, Mtg, Headlight [800 B/Gr]	2
	2	51787	(004000-)	Bumper, Rbr, 0.6d 0.34th 0.3d Tip	4
	3	70762	(004000- 008088)	Hinge Wldt	2
	3	1073872	(008089-)	Hinge Wldt [800 Blue/Green]	2
	4	04843	(004000-)	Bushing, Flng, 0.63b 0.72d 0.25l	4
	5	70761	(004000-)	Tube, 0.44id 0.62od 02.4l, Stl	2
	6	69906	(004000-)	Gasspring Assy, Eng Cover	2
	7	77394	(004000- 008088)	Panel Wldt, Headlight	1
	7	1073895	(008089-)	Panel Wldt, Headlight [800 B/Green]	1
	8	70730	(004000-)	Hinge Wldt	2
	9	74015	(004000-)	Tube, 0.34id 0.44od 00.5l, Stl	2
	10	70742	(004000-)	Pin Wldt, Latch	1
	11	58524	(004000-)	Headlight, 12vdc, 50watt	2
	12	65278	(004000- 008088)	Cover Wldt, Hppr, Rh	1
	12	1073820	(008089-)	Cover Wldt, Hppr, Rh [800 B/Green]	1
	13	11747	(004000-)	Bushing, Snap- In, 0.31b 0.41d 0.14th Nyl	2
	14	65281	(004000- 008088)	Cover Wldt, Hppr, Side, Lh	1
	14	1073821	(008089-)	Cover Wldt, Hppr, Lh [800 B/Green]	1
	15	01274	(004000-)	Spring, Extn, 0.96od 0.09wir 04.4l	2
	16	79019	(004000-)	Latch	1
	17	75047	(004000-)	Bracket, Mtg, Side Panl Rh [800l]	1
	18	75046	(004000-)	Bracket, Mtg, Side Panl Lh [800l]	1
	19	63378	(004000-)	Magnet, Drive Brush	1
	20	79591	(004000-)	Bumper, Cover, Hppr	2
	21	77400	(004000-)	Angle, Mtg	1
▽	22	21221	(004000- 008088)	Cover Assy, Hppr	1
▲	23	375564	(004000- 008088)	Seal, Rbr, Clsd, 1.50, 2.00w 07.0l	2
▲	24	375565	(004000- 008088)	Seal, Rbr, Clsd, 1.50, 2.00w 26.4l	3
▲	25	375566	(004000- 008088)	Seal, Rbr, Clsd, 1.50, 2.00w 50.1l	3
▲	26	381962	(004625- 008088)	Handle, Container	1
▲	27	382726	(004625- 008088)	Screw, Pan, Phl, M6 X 1.00 X 25, 4.8	2
▲	28	08708	(004625- 008088)	Nut, Hex, Lock, M6 X 1.00, Nl	2
▽	22	1073959	(008089-)	Cover Assy, Hppr [800 B/Green]	1
▲	23	375564	(008089-)	Seal, Rbr, Clsd, 1.50, 2.00w 07.0l	2
▲	24	375565	(008089-)	Seal, Rbr, Clsd, 1.50, 2.00w 26.4l	3
▲	25	375566	(008089-)	Seal, Rbr, Clsd, 1.50, 2.00w 50.1l	3
▲	26	381962	(008089-)	Handle, Container	1
▲	27	382726	(008089-)	Screw, Pan, Phl, M6 X 1.00 X 25, 4.8	2
▲	28	08708	(008089-)	Nut, Hex, Lock, M6 X 1.00, Nl	2
	29	03193	(004000-)	Screw, Hex, M10 X 1.50 X 90, 8.8	2
	30	41430	(004000-)	Nut, Hex, Lock, M10 X 1.5, Nl	2
	31	16931	(004000-)	Screw, Hex, M8 X 1.25 X 20, 8.8	4
	32	32491	(004000-)	Washer, Flat, 0.31, Std	4
	33	12274	(004000-)	Screw, Hex, M6 X 1.00 X 20, 8.8, Nl	4
	34	19066	(004000-)	Washer, Flat, 0.25b 0.56d .05, Pl, 10	4
	35	16735	(004000-)	Screw, Hex, M8 X 1.25 X 16, 8.8	2
	36	41186	(004000-)	Washer, Flat, Belleville, .31	2

Fig. 17 - Hopper Bumper Group

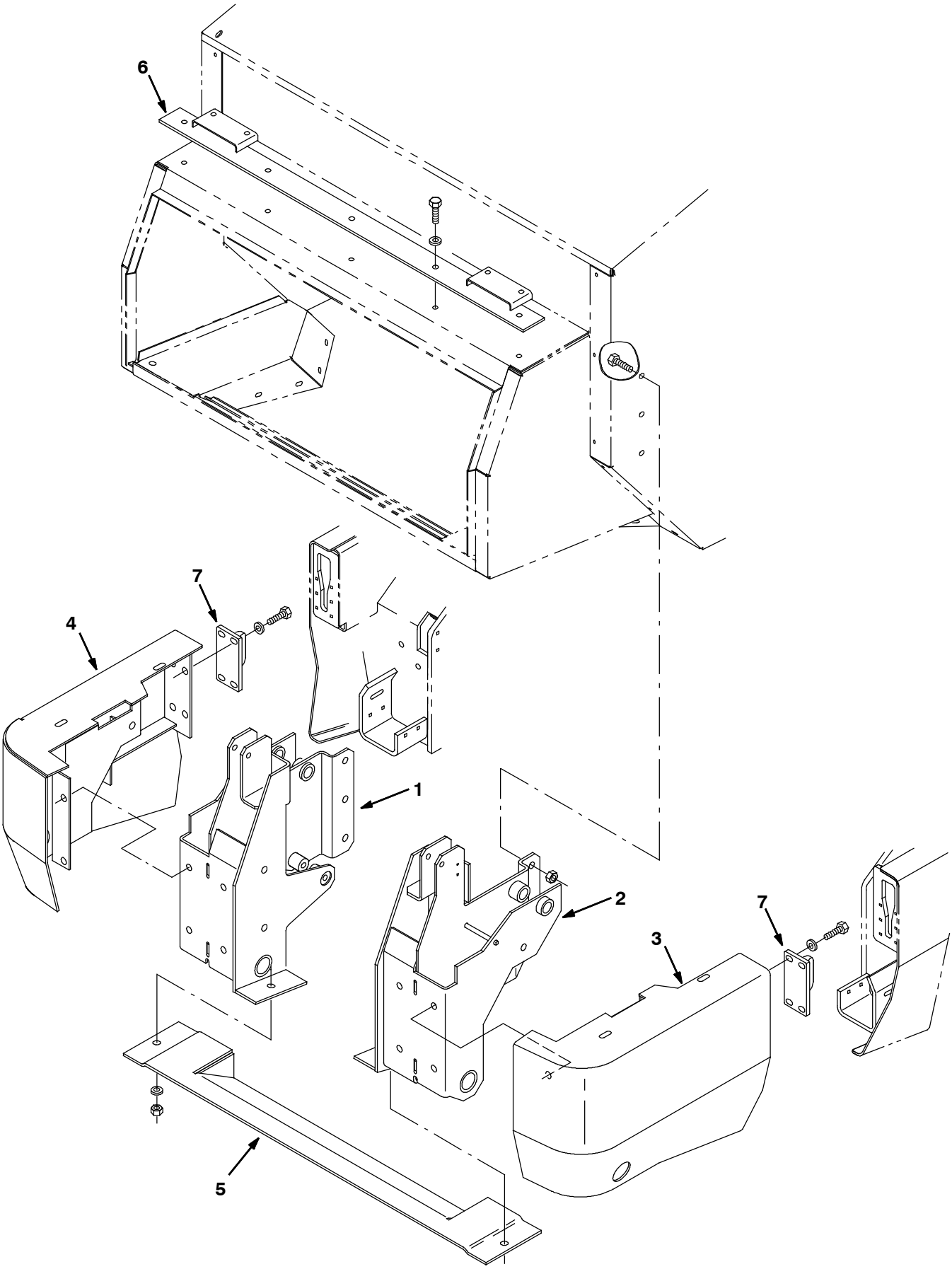

09802 - ALL

Fig. 17 - Hopper Bumper Group

Ref.	Part No.	Serial Number	Description	Qty.
1	83547	(004000-)	Bumper Wldt, Sppt, Hppr, Rh	1
2	83548	(004000-)	Bumper Wldt, Sppt, Hppr, Lh	1
3	83620	(004000- 008088)	Bumper Wldt, Lh	1
3	1073842	(008089-)	Bumper Wldt, Lh [800 Gray]	1
4	83622	(004000- 008088)	Bumper Wldt, Rh	1
4	1073843	(008089-)	Bumper Wldt, Rh [800 Gray]	1
5	77523	(004000-)	Guard Wldt, Hppr	1
6	77516	(004000-)	Bracket Wldt, Mtg, Headlight	1
7	63671	(004000-)	Latch, Bmpr	2

Fig. 18 - Hopper Filter Shaker Group

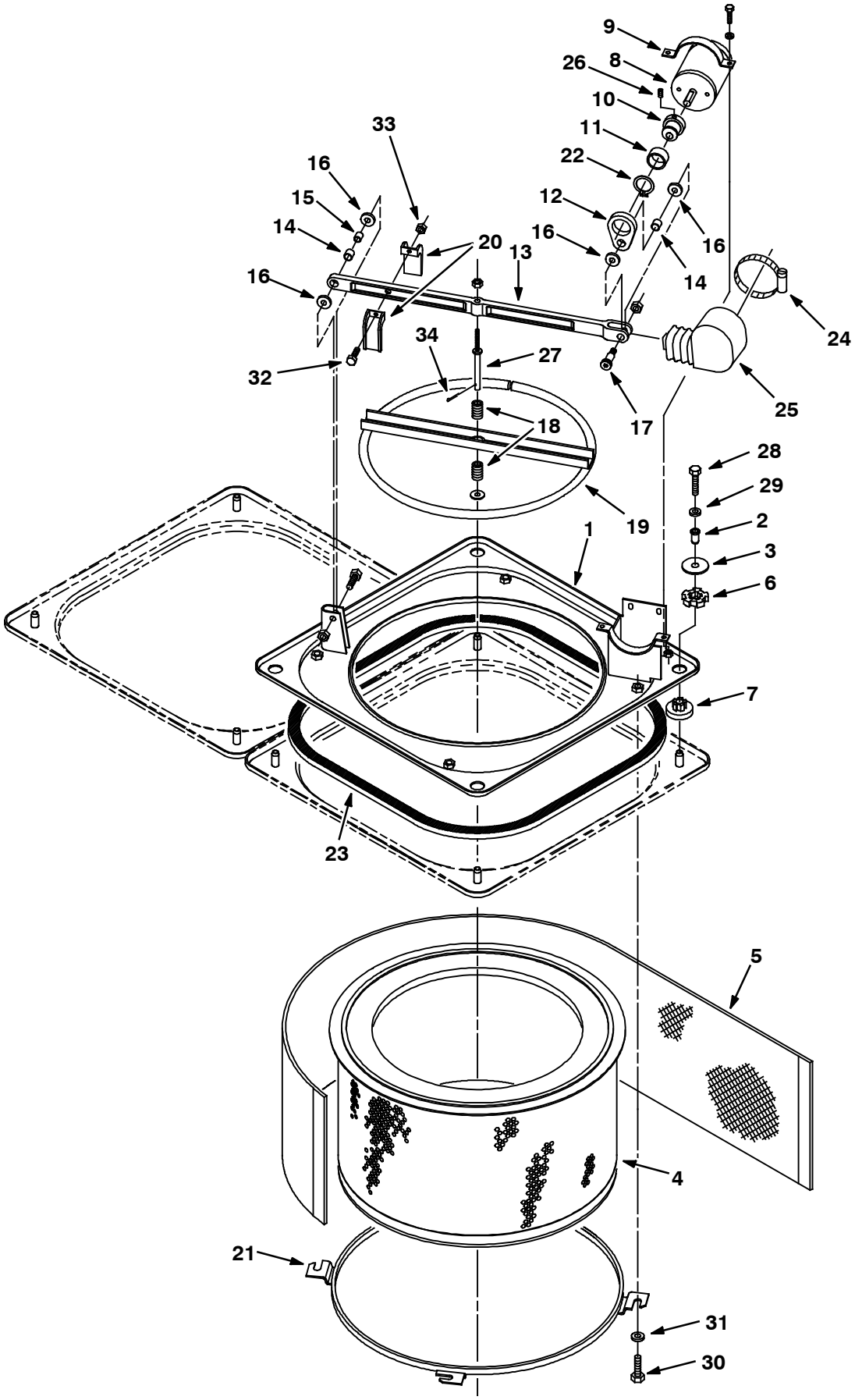

07576 - ALL

Fig. 18 - Hopper Filter Shaker Group

	Ref.	Part No.	Serial Number	Description	Qty.
	1	64580	(004000-)	Panel Wldt, Shakr	2
	2	64874	(004000-)	Ferrule	8
	3	64873	(004000-)	Disc, Stl, 0.06, 02.00d, 0.6h	8
	4	48069	(004000-)	Element, Fltr, Air, 20.5d 10.8l	2
▽	4	63297	(004000-)	Element, Fltr, Air	2
▲	5	63311	(004000-)	Screen, Fltr, 10.0 X	1
	6	64618	(004000-)	Isolator, Vib, Ring, 1.9d 0.5l 1.3b	8
	7	64621	(004000-)	Isolator, Vib, Bshg, 1.9d 0.9l .6b 1.16h	8
	8	31999	(004000-)	Motor, Ele, 14vdc 1600rpm 0.04hp	2
	9	64559	(004000-)	Clamp, Cable, Stl, 3.32d X 0.75w, 2hole	2
	10	64567	(004000-)	Shaft, Eccentric	2
	11	32006	(004000-)	Bearing, Needle, 1.13b 1.38d 0.75w	2
	12	64394	(004000-)	Link, Eccentric	2
▽	13	77471	(004000-)	Bar Kit, Shakr, F/64374, Replmt	2
▲	14	63233	(004000-)	Bushing, Sleeve, 0.50b 0.59d 0.50l, Bnz	2
▲	15	63234	(004000-)	Tube, 0.38id 0.5ood 00.6l, Ss	1
▲	16	59633	(004000-)	Washer, Thrust, 0.53b 1.00d 0.03w[Fbrgl]	4
▲	17	58357	(004000-)	Bolt, Shld, .50d X 1.00, .38- 16	2
	18	64392	(004000-)	Spring, Dsl, 0.75od 0.38id 1.50l	4
	19	64501	(004000-)	Ring Wldt, Shakr	2
	20	64410	(004000-)	Guide, Fltr, Shakr, [800]	4
	21	64500	(004000-)	Ring Wldt, Mtg, Fltr	2
	22	70651	(004000-)	Ring, Retaining, Ext, 1.12d	2
	23	21303	(004000-)	Seal Kit, Bulb, Shakr Panl [800l]	2
	24	43555	(004000-)	Clamp, Hose, Wormdrive, 2.62- 3.50d	2
	25	73734	(004000-)	Boot, Bar, Shakr, Fltr [800l]	2
	26	70650	(004000-)	Screw, Set, Soc, M8 X 1.25 X 12, Pl[45h]	2
	27	32009	(004000-)	Bar, Shakr Stem	2
	28	39284	(004000-)	Screw, Hex, M10 X 1.50 X 35, 8.8	8
	29	32492	(004000-)	Washer, Flat, 0.38, Std	8
	30	09028	(004000-)	Screw, Hex, M10 X 1.50 X 25, Ss	8
	31	01686	(004000-)	Washer, Flat, 0.44b 1.00d .08, Ss	8
	32	09164	(004000-)	Screw, Pan, Phl, M6 X 1.00 X 20, 4.8	2
	33	08708	(004000-)	Nut, Hex, Lock, M6 X 1.00, Nl	2
	34	1074659	(004000-)	Pin, Cotter, .109 X 1.00	1

Fig. 19 - Hopper Pressure Switch Group

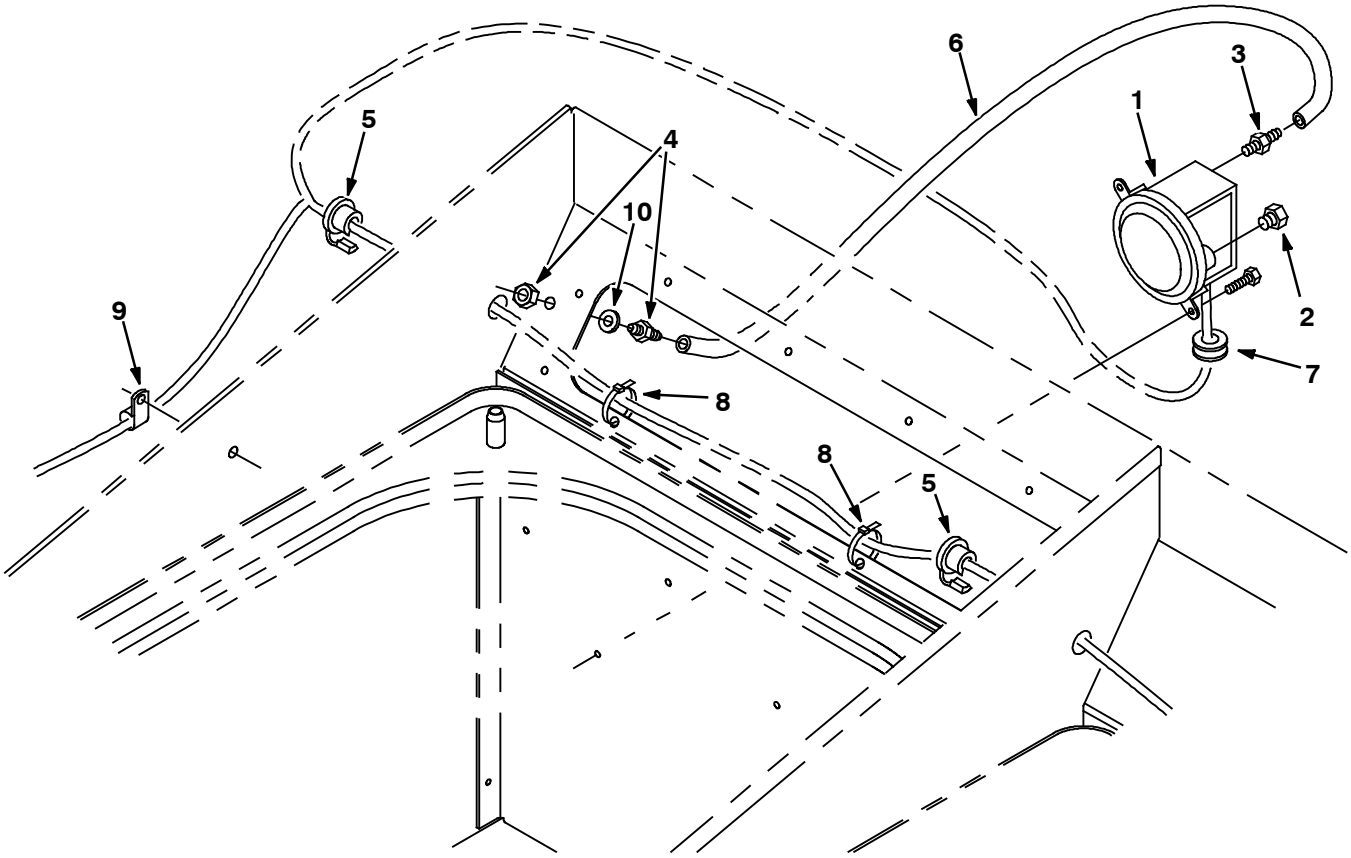

07626 - ALL

Fig. 19 - Hopper Pressure Switch Group

Ref.	Part No.	Serial Number	Description	Qty.
1	75465	(004000-)	Switch, Press, 0020psi Spdt	1
2	82739	(004000-)	Fitting, Brs, Breather [02mp]	1
3	40607	(004000-)	Fitting, Brs, Str, Bm03/Pm02	1
4	39923	(004000-)	Fitting, Brs, Str, Bm03/Bm03, Bh	1
5	34864	(004000-)	Strainrelief	2
6	73727	(004000-)	Hose, Vacuum, 0.16id X 009.5l	1
7	10632- 4	(004000-)	Grommet, Rbr, 0.62id, F/0.9h, .06 Matl	1
8	49266	(004000-)	Tie, Cable, Nyl, 07.3l .19w 1.8 Max D	8
9	40678	(004000-)	Clamp, Cable, Stl, 0.44d X 0.62w, 1hole	2
10	43454	(004000-)	Washer, Flat, 0.34b 0.69d .06, Nyl	1

Fig. 20 - Engine and Alternator Group (004000-004936)

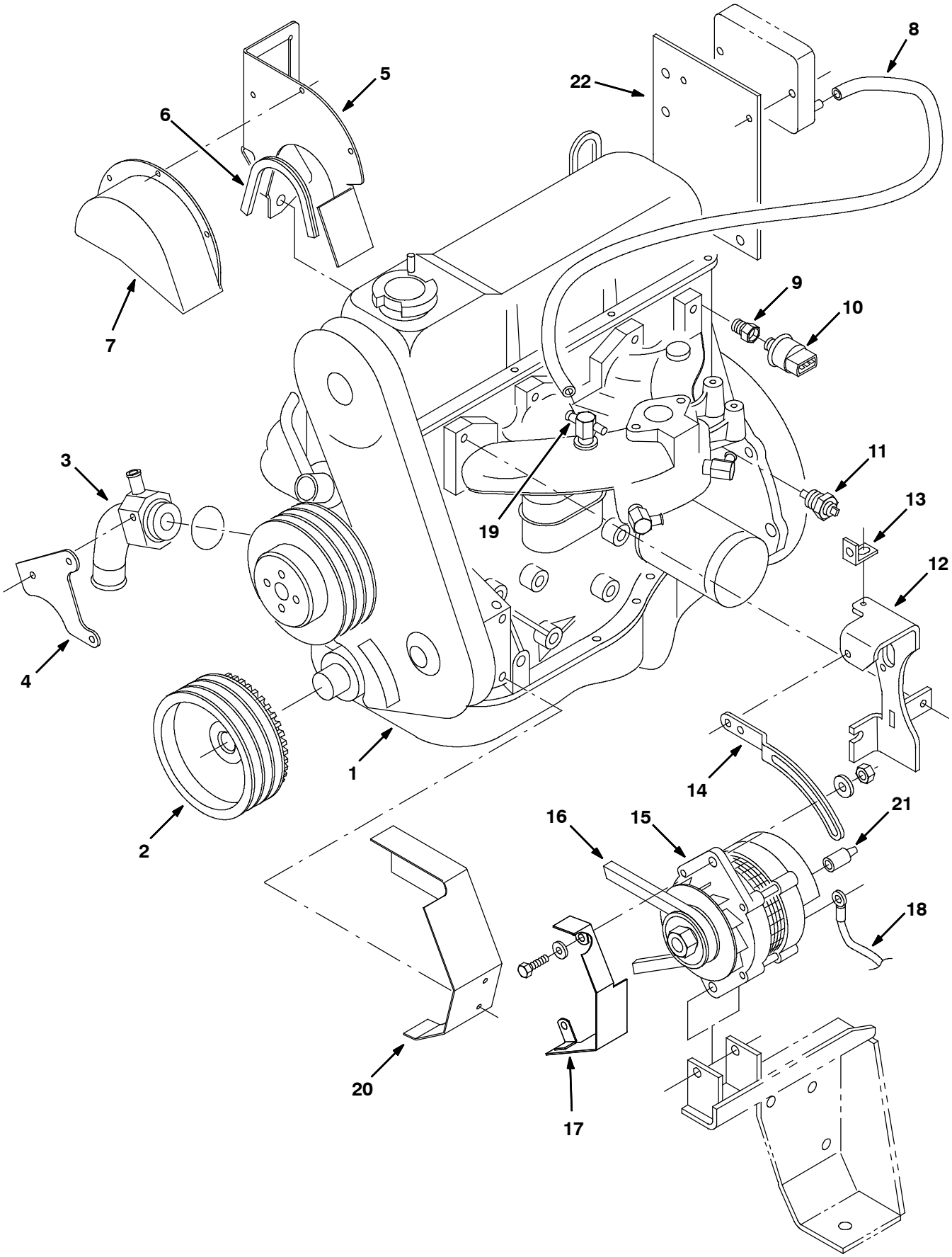

10614 - G, LP

Fig. 20 - Engine and Alternator Group (004000-004936)

	Ref.	Part No.	Serial Number	Description	Qty.
	1	83652	(004000-004215)	Engine Purch Kit, Lrg423 (See 2.3L Engine Brkdn)	1
	1	1044235	(004216-004936)	Engine [Ford, 2.5l Reman] (See 2.5L Engine Brkdn)	1
	2	83664	(004000-004936)	Sheave Assy, 02grv, 6.2pd [Hc38]	1
	3	83729	(004000-004936)	Adapter, Pump, Water, Mach	1
	4	83731	(004000-004936)	Panel, Mtg, Adapter, Water Pump [Ford]	1
	5	385417	(004000-004936)	Bracket Wldt, Mtg, Ignition Coil [Ford]	1
	6	59375	(004000-004936)	Molding, Trim, Extrusion, .062, 10.10l	1
	7	21294	(004000-004936)	Cover, Belt, Timing [Lsg423fd]	1
	8	19774	(004000-004936)	Hose, Vacuum, 0.16id X 015.6l	1
	9	17414	(004000-004936)	Fitting, Hyd, Str, Pf02/Pm04	1
	10	1055106	(004000-004936)	Switch, Press, 0006psi Dpdt	1
	11	36165	(004000-004936)	Send-Unit, Water, Temp, 06npt [Datcon]	1
	12	83750	(004000-004936)	Bracket Wldt, Mtg, Alternator	1
	13	31038	(004000-004936)	Angle, Mtg, Stl, .12 1.2 1.0 00.8l	1
	14	31526	(004000-004936)	Arm, Adj, Alternator, 5.0r [Curved]	1
▽	15	60559	(004000-004936)	Alternator, 12vdc 050a Sealed Brush	1
▲		61931	(004000-004936)	Regulator, Alternator, 12vdc	1
▲		86041	(004000-004936)	Bearing, Ball, 0.67b 1.57d 0.47w	1
▲		61529	(004000-004936)	Kit, Brush, Alternator	1
▲		61531	(004000-004936)	Rectifier, Alternator	1
▲		70160	(004000-004936)	Pulley, Alternator	1
	16	83692	(004000-004936)	Belt, V, 46.4l, Cogged [Hc38]	1
	17	74076	(004000-004936)	Guard Wldt, Alternator, F/60559	1
	18	82731	(004000-004936)	Wire, 10ga 09.0l Blk .19ring /.41ring	1
	19	630094	(004000-004936)	Cap, Vinyl, 2.26 Id X 12.7lg, Blk	1
	20	83853	(004000-004936)	Cover Wldt, Pump, Oil [Lrg423]	1
	21	61363	(004000-004936)	Boot, Str, 0.12id 0.43id 0.25l, Blk	2
	22	83747	(004000-004936)	Bracket, Mtg, Ignition Module	1

Fig. 21 - Engine Mount Group (004000-004936)

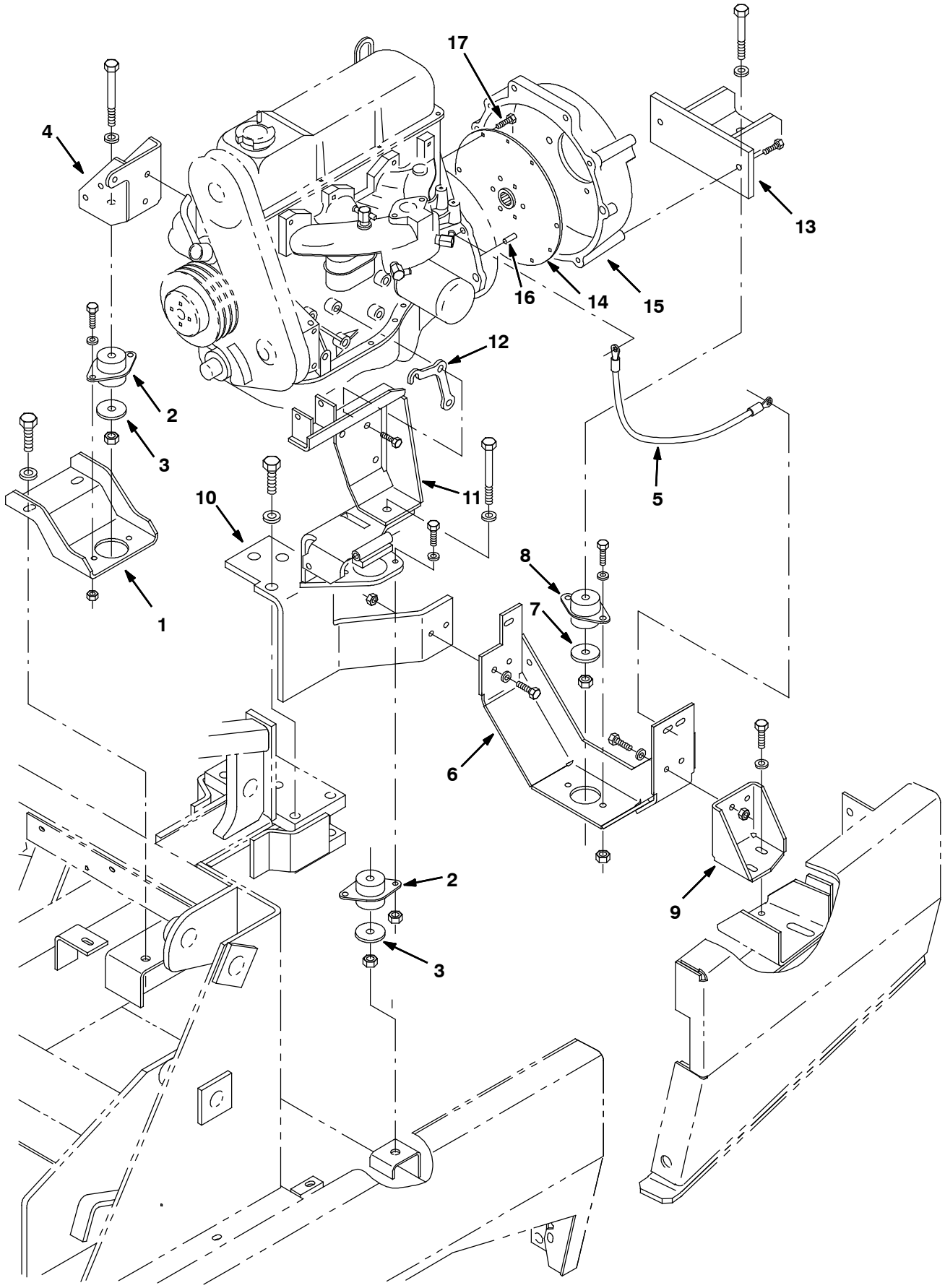

10612 - G, LP

Fig. 21 - Engine Mount Group (004000- 004936)

Ref.	Part No.	Serial Number	Description	Qty.
1	83674	(004000- 004936)	Bracket Wldt, Mtg, Eng, Front, Rh	1
2	63695	(004000- 004936)	Isolator, Vib, Flng, 1.3h .5b 2/.39h	2
3	04414	(004000- 004936)	Washer, Flat, 0.53b 1.88d .12, Stl, Pl	2
4	385426	(004000- 004936)	Bracket, Mtg, Eng, Front, Rh [Ford]	1
5	57773	(004000- 004936)	Cable, 06ga 13.0l Blk	1
6	77430	(004000- 004936)	Bracket Wldt, Mtg, Eng, Rear	1
7	57048	(004000- 004936)	Washer, Flat, 0.53b 2.13d .11, Stl, Pl	1
8	63263	(004000- 004936)	Isolator, Vib, Flng, 1.3h .5b 2/.39h	1
9	77434	(004000- 004936)	Bracket, Mtg, Eng, Rear, Lh	1
10	77435	(004000- 004936)	Bracket, Mtg, Eng, Rear, Rh, Dsl	1
11	380598	(004000- 004936)	Bracket Wldt, Mtg, Eng	1
12	83673	(004000- 004936)	Panel, Spacer, Eng Mtg, Fr Rep.Bynone	1
13	63535	(004000- 004215)	Bracket Wldt, Mtg, Eng, Rear [2.3ford]	1
13	385412	(004216- 004936)	Channel Wldt, Mtg, Eng, Rear	1
14	35980	(004000- 004936)	Coupling, Drive, Flex, 10.3d /15tooth	1
15	83689	(004000- 004215)	Housing, Flywheel, Mach [Lrg 2.3, Ford]	1
15	385433	(004216- 004936)	Housing, Flywheel, Mach [Lrg 2.5, Ford]	1
16	14296	(004216- 004936)	Pin, Roll, .312d X 0.75l, .312/.318	3
17	375193	(004000- 004936)	Screw, Hex, M8 X 1.00 X 16, 10.9	6

Fig. 22 - Engine Group (004937-005999)

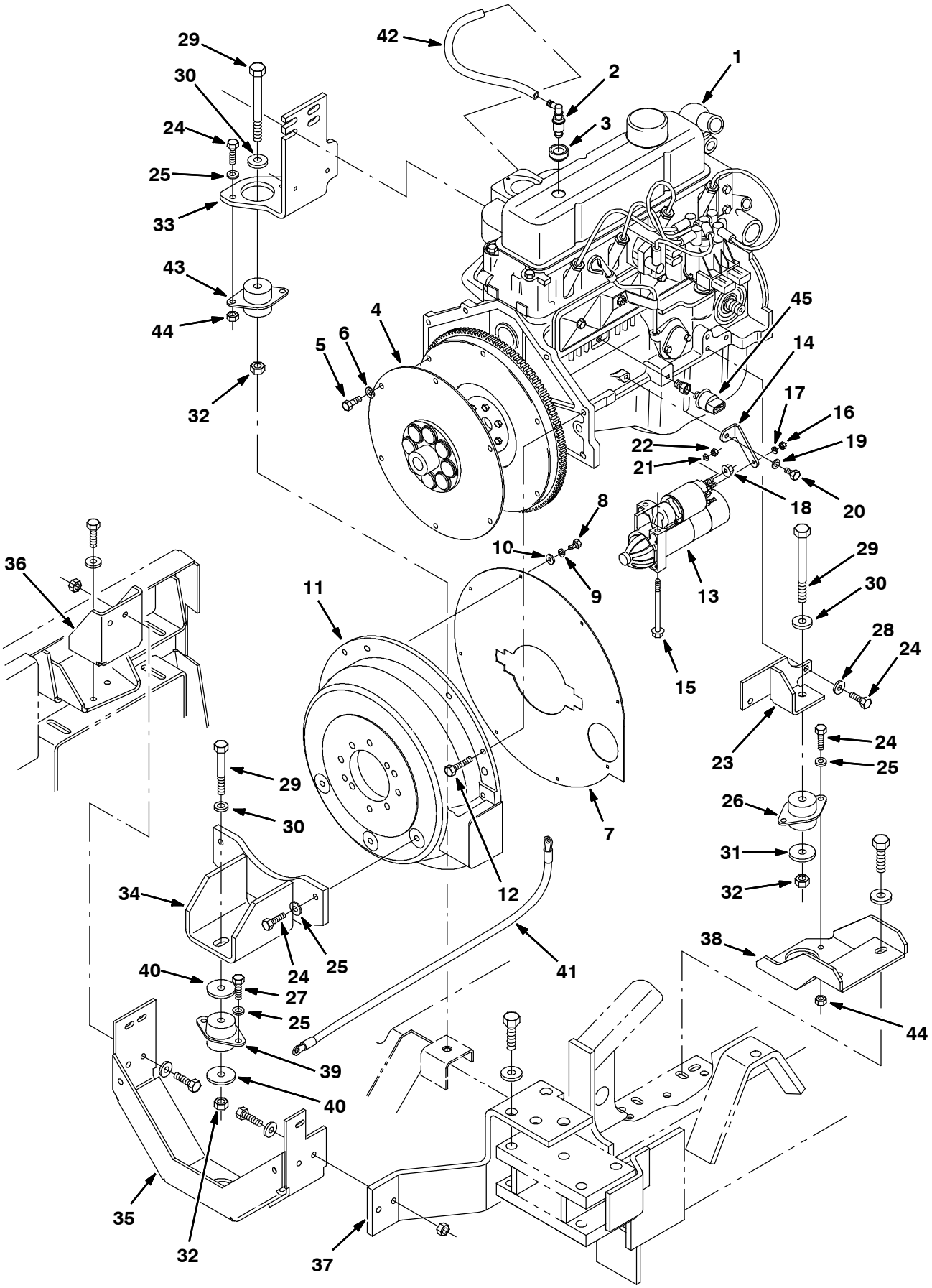

353870 - 800, G, LP

Fig. 22 - Engine Group (004937-005999)

Ref.	Part No.	Serial Number	Description	Qty.
1	392561	(004937-005999)	Engine, Gm, 3.0 Liter, Gas (See GM Engine Breakdown)	1
1	392563	(004937-005999)	Engine, Gm, 3.0 Liter, Lpg (See GM Engine Breakdown)	1
2	393975	(004937-005999)	Valve [Pcv]	1
3	393984	(004937-005999)	Grommet	1
4	371507	(004937-005999)	Plate, Drive	1
5	371508	(004937-005999)	Bolt, Clutch	6
6	371509	(004937-005999)	Washer, Lock, 0.38	11
7	371761	(004937-005999)	Shield, Dust	1
8	19315	(004937-005999)	Screw, Hex, .25-20 X 0.50, G5	8
9	371512	(004937-005999)	Washer, Lock, 0.25	8
10	32483	(004937-005999)	Washer, Flat, 0.25, Sae	8
11	371762	(004937-005999)	Housing	1
12	55347	(004937-005999)	Screw, Hex, .38-16 X 2.00, Fl	5
13	371516	(004937-005999)	Starter, 12vdc [Gm]	1
14	371517	(004937-005999)	Bracket, Starter	1
15	371518	(004937-005999)	Bolt, Starter	1
16	50335	(004937-005999)	Nut, Hex, Std, M5 X 0.80, 8	2
17	371519	(004937-005999)	Washer, Lock, M5	1
18	07791	(004937-005999)	Nut, Hex, Flng, M8 X 1.25	1
19	393994	(004937-005999)	Washer, Lock, 0.31	1
20	54396	(004937-005999)	Screw, Hex, .31-18 X 0.75, G5	1
21	371520	(004937-005999)	Washer, Lock, #10	1
22	19311	(004937-005999)	Nut, Hex, Std, #10-24	1
23	392622	(004937-005999)	Bracket, Mtg, Eng, Rh	1
24	21197	(004937-005999)	Screw, Hex, .38-16 X 1.00, G5	8
25	32492	(004937-005999)	Washer, Flat, 0.38, Std	8
26	63695	(004937-005999)	Isolator, Vib, Flng, 1.3h .5b 2/.39h	1
27	21198	(004937-005999)	Screw, Hex, .38-16 X 1.25, G5	4
28	32425	(004937-005999)	Adapter, Air-Intk, Gas/Lpg	2
29	06972	(004937-005999)	Screw, Hex, M12 X 1.75 X 60, 8.8	4
30	32493	(004937-005999)	Washer, Flat, 0.50, Std	4
31	04414	(004937-005999)	Washer, Flat, 0.53b 1.88d .12, Stl, Pl	3
32	08711	(004937-005999)	Nut, Hex, Lock, M12 X 1.75, Nl	4
33	392642	(004937-005999)	Bracket, Mtg, Eng, Lh	1
34	1014411	(004937-005999)	Channel Wldt, Mtg, Eng, Rear	1
35	77430	(004937-005999)	Bracket Wldt, Mtg, Eng, Rear	1
36	77434	(004937-005999)	Bracket, Mtg, Eng, Rear, Lh	1
37	77435	(004937-005999)	Bracket, Mtg, Eng, Rear, Rh, Dsl	1
38	83674	(004937-005999)	Bracket Wldt, Mtg, Eng, Front, Rh	1
39	63263	(004937-005999)	Isolator, Vib, Flng, 1.3h .5b 2/.39h	1
40	57048	(004937-005999)	Washer, Flat, 0.53b 2.13d .11, Stl, Pl	2
41	57773	(004937-005999)	Cable, 06ga 13.0l Blk	1
42	393973	(004937-005999)	Hose, Pvc, 18.0l	1
43	75768	(004937-005999)	Isolator, Vib, Flng, 2.0h .5b 2/.41h	1
44	50902	(004937-005999)	Nut, Hex, Lock, .38-16, Nl	4
45	371572	(004937-005999)	Send-Unit, Press, Oil	1

Fig. 23 - Engine Group (006000-006999)

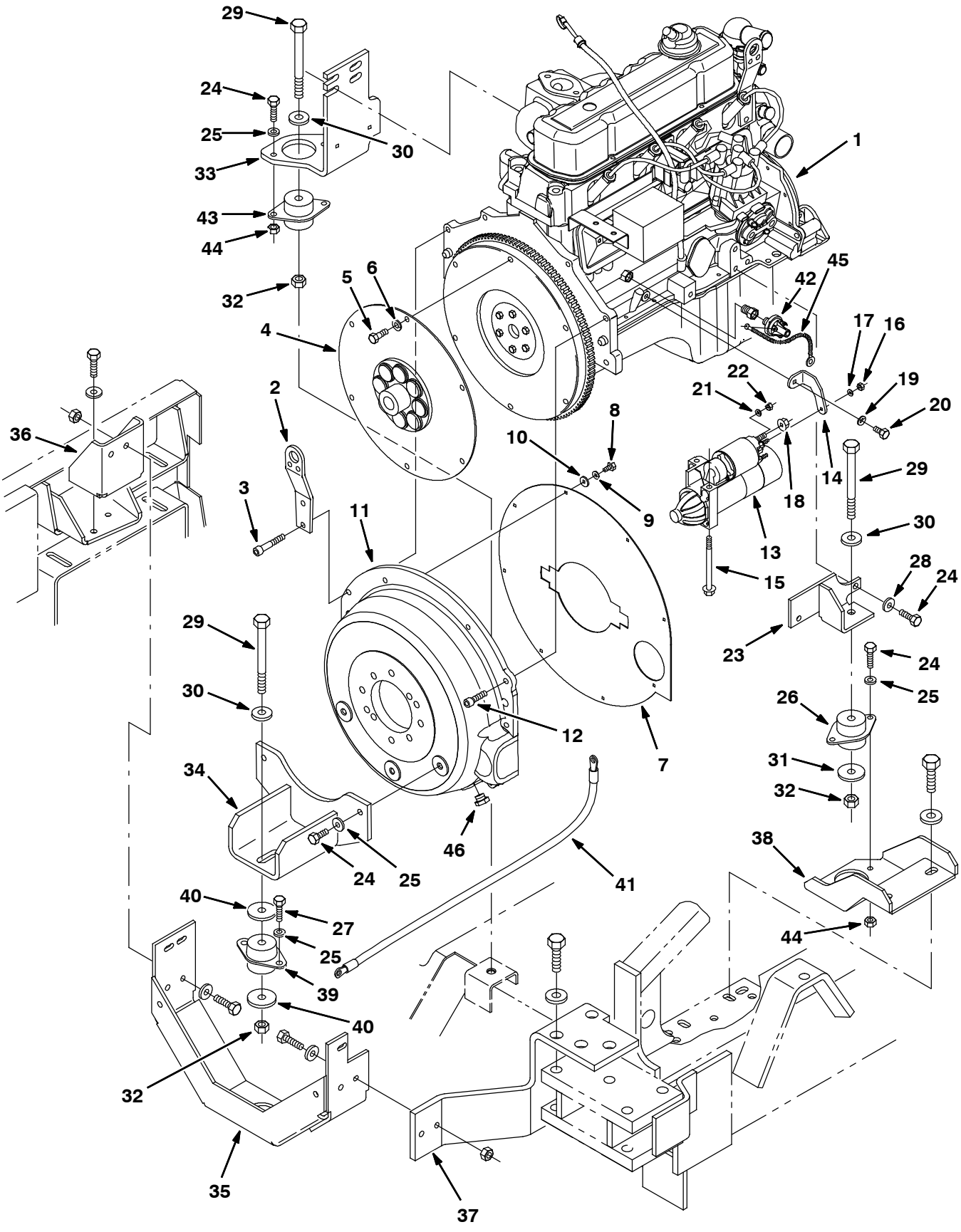

353870 - 800, G, LP, GM, Impco

Fig. 23 - Engine Group (006000-006999)

Ref.	Part No.	Serial Number	Description	Qty.
1	385019	(006000-006999)	Engine, Block, Long [Gm3.0l] (See GM Engine Breakdown)	1
2	372457	(006000-006999)	Bolt, Eye, Lift	1
3	372479	(006000-006999)	Screw, Soc, .38-16 X 2.25, G5	1
4	372456	(006000-006999)	Plate, Drive	1
5	371508	(006000-006999)	Bolt, Clutch	6
6	371509	(006000-006999)	Washer, Lock, 0.38	11
7	371761	(006000-006999)	Shield, Dust	1
8	19315	(006000-006999)	Screw, Hex, .25-20 X 0.50, G5	8
9	371512	(006000-006999)	Washer, Lock, 0.25	8
10	32483	(006000-006999)	Washer, Flat, 0.25, Sae	8
11	372458	(006000-006999)	Housing, Flywheel [3.0l]	1
12	10831	(006000-006999)	Screw, Soc, .38-16 X 1.25, Al	5
13	371516	(006000-006999)	Starter, 12vdc [Gm]	1
14	372473	(006000-006999)	Bracket, Starter	1
15	371518	(006000-006999)	Bolt, Starter	1
16	50335	(006000-006999)	Nut, Hex, Std, M5 X 0.80, 8	2
17	371519	(006000-006999)	Washer, Lock, M5	1
18	07791	(006000-006999)	Nut, Hex, Flng, M8 X 1.25	1
19	393994	(006000-006999)	Washer, Lock, 0.31	1
20	54396	(006000-006999)	Screw, Hex, .31-18 X 0.75, G5	1
21	371520	(006000-006999)	Washer, Lock, #10	1
22	19311	(006000-006999)	Nut, Hex, Std, #10-24	1
23	392622	(006000-006999)	Bracket, Mtg, Eng, Rh	1
24	21197	(006000-006999)	Screw, Hex, .38-16 X 1.00, G5	8
25	32492	(006000-006999)	Washer, Flat, 0.38, Std	8
26	63695	(006000-006999)	Isolator, Vib, Flng, 1.3h .5b 2/.39h	1
27	21198	(006000-006999)	Screw, Hex, .38-16 X 1.25, G5	4
28	32425	(006000-006999)	Adapter, Air-Intk, Gas/Lpg	2
29	06972	(006000-006999)	Screw, Hex, M12 X 1.75 X 60, 8.8	4
30	32493	(006000-006999)	Washer, Flat, 0.50, Std	4
31	04414	(006000-006999)	Washer, Flat, 0.53b 1.88d .12, Stl, Pl	3
32	08711	(006000-006999)	Nut, Hex, Lock, M12 X 1.75, Nl	4
33	392642	(006000-006999)	Bracket, Mtg, Eng, Lh	1
34	1014411	(006000-006999)	Channel Wldt, Mtg, Eng, Rear	1
35	77430	(006000-006999)	Bracket Wldt, Mtg, Eng, Rear	1
36	77434	(006000-006999)	Bracket, Mtg, Eng, Rear, Lh	1
37	77435	(006000-006999)	Bracket, Mtg, Eng, Rear, Rh, Dsl	1
38	83674	(006000-006999)	Bracket Wldt, Mtg, Eng, Front, Rh	1
39	63263	(006000-006999)	Isolator, Vib, Flng, 1.3h .5b 2/.39h	1
40	57048	(006000-006999)	Washer, Flat, 0.53b 2.13d .11, Stl, Pl	2
41	57773	(006000-006999)	Cable, 06ga 13.0l Blk	1
42	372445	(006000-006999)	Switch, Press, 7psi, Spdt	1
43	75768	(006000-006999)	Isolator, Vib, Flng, 2.0h .5b 2/.41h	1
44	50902	(006000-006999)	Nut, Hex, Lock, .38-16, Nl	4
45	372474	(006000-006999)	Harness,Switch,Oil Press,Ground Wire	1
46	1018573	(006000-006999)	Screw, Hex, .62-18 X 0.31	1

Fig. 24 - Engine Group (007000-)

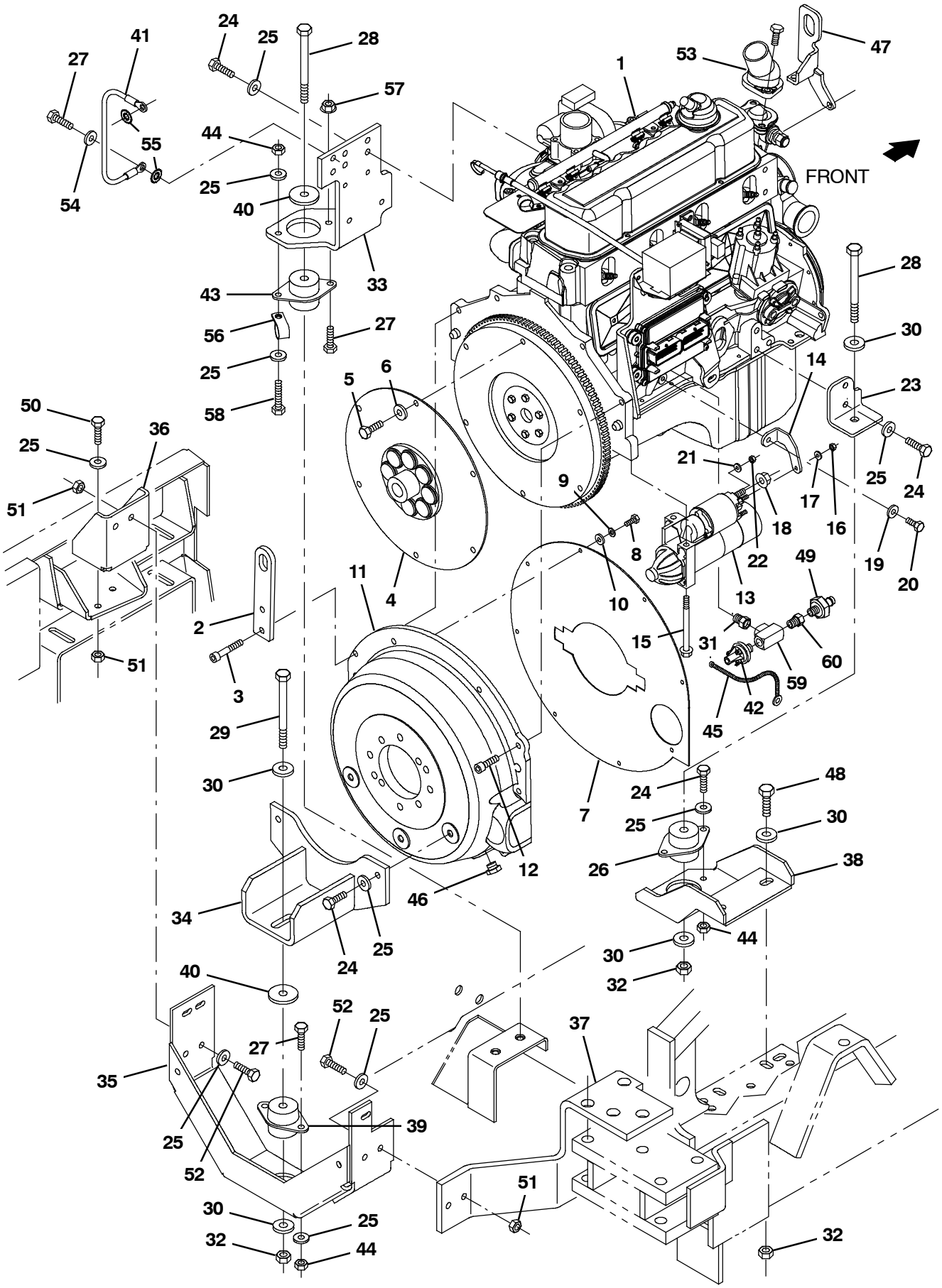

353870 - 800, G, LP, GM, Impco

Fig. 24 - Engine Group (007000-)

Ref.	Part No.	Serial Number	Description	Qty.
1	385019	(007000-)	Engine, Block, Long [Gm3.0l] (See GM Engine Breakdown)	1
2	1034105	(007000-)	Hook, Lift [Gm3.0l 2007]	1
3	372479	(007000-)	Screw, Soc, .38- 16 X 2.25, G5	1
4	372456	(007000-)	Plate, Drive	1
5	371508	(007000-)	Bolt, Clutch	6
6	371509	(007000-)	Washer, Lock, 0.38	11
7	371761	(007000-)	Shield, Dust	1
8	19315	(007000-)	Screw, Hex, .25- 20 X 0.50, G5	8
9	371512	(007000-)	Washer, Lock, 0.25	8
10	32483	(007000-)	Washer, Flat, 0.25, Sae	8
11	372458	(007000-)	Housing, Flywheel [3.0l]	1
12	10831	(007000-)	Screw, Soc, .38- 16 X 1.25, Al	5
13	371516	(007000-)	Starter, 12vdc [Gm]	1
14	372473	(007000-)	Bracket, Starter	1
15	371518	(007000-)	Bolt, Starter	1
16	50335	(007000-)	Nut, Hex, Std, M5 X 0.80, 8	2
17	371519	(007000-)	Washer, Lock, M5	1
18	07791	(007000-)	Nut, Hex, Flng, M8 X 1.25	1
19	393994	(007000-)	Washer, Lock, 0.31	1
20	54396	(007000-)	Screw, Hex, .31- 18 X 0.75, G5	1
21	371520	(007000-)	Washer, Lock, #10	1
22	19311	(007000-)	Nut, Hex, Std, #10- 24	1
23	1029375	(007000-)	Bracket, Mtg, Eng, Rh	1
24	21197	(007000-)	Screw, Hex, .38- 16 X 1.00, G5	8
25	32492	(007000-)	Washer, Flat, 0.38, Std	13
26	63695	(007000-)	Isolator, Vib, Flng, 1.3h .5b 2/.39h	1
27	21198	(007000-)	Screw, Hex, .38- 16 X 1.25, G5	4
28	06973	(007000-)	Screw, Hex, M12 X 1.75 X 70, 8.8	2
29	06972	(007000-)	Screw, Hex, M12 X 1.75 X 60, 8.8	1
30	32493	(007000-)	Washer, Flat, 0.50, Std	6
31	9013903	(007000-)	Pipe, Nipple [Gm3.0l]	1
32	08711	(007000-)	Nut, Hex, Lock, M12 X 1.75, Nl	6
33	1031961	(007000-)	Bracket, Mtg, Eng, Lh	1
34	1014411	(007000-)	Channel Wldt, Mtg, Eng, Rear	1
35	77430	(007000-)	Bracket Wldt, Mtg, Eng, Rear	1
36	77434	(007000-)	Bracket, Mtg, Eng, Rear, Lh	1
37	77435	(007000-)	Bracket, Mtg, Eng, Rear, Rh, Dsl	1
38	83674	(007000-)	Bracket Wldt, Mtg, Eng, Front, Rh	1
39	63263	(007000-)	Isolator, Vib, Flng, 1.3h .5b 2/.39h	1
40	57048	(007000-)	Washer, Flat, 0.53b 2.13d .11, Stl, Pl	2
41	57773	(007000-)	Cable, 06ga 13.0l Blk	1
42	372445	(007000-)	Switch, Press, 7psi, Spdt	1
43	75768	(007000-)	Isolator, Vib, Flng, 2.0h .5b 2/.41h	1
44	50902	(007000-)	Nut, Hex, Lock, .38- 16, Nl	4

353870 - 800, G, LP, GM, Impco

Fig. 24 - Engine Group (007000-)

Ref.	Part No.	Serial Number	Description	Qty.
45	372474	(007000-)	Harness,Switch,Oil Press,Ground Wire	1
46	1018573	(007000-)	Screw, Hex, .62- 18 X 0.31	1
47	1029334	(007000-)	Hook, Lift [Gm3.0l 2007]	1
48	06968	(007000-)	Screw, Hex, M12 X 1.75 X 35, 8.8	2
49	9010259	(007000-)	Sender, Oil, Press [Mit]	1
50	03192	(007000-)	Screw, Hex, M10 X 1.50 X 30, 8.8	2
51	41430	(007000-)	Nut, Hex, Lock, M10 X 1.5, Nl	6
52	39284	(007000-)	Screw, Hex, M10 X 1.50 X 35, 8.8	4
53	1030272	(007000-)	Housing, Thermostat [Gm3.0l 2007]	1
54	32485	(007000-)	Washer, Flat, 0.38, Sae	1
55	41142	(007000-)	Washer, Lock, Int- Ext, 0.38	2
56	69234	(007000-)	Clamp, Cable, Stl, 1.00d X 0.75w, 1hole	1
57	27980	(007000-)	Nut, Hex, Flng, .38- 16	1
58	55347	(007000-)	Screw, Hex, .38- 16 X 2.00, Fl	1
59	9013904	(007000-)	Fitting [Gm3.0l]	1
60	9013902	(007000-)	Pipe, Adapter [Gm30.0l]	1

Fig. 25 - Engine Alternator Group (004937-005999)

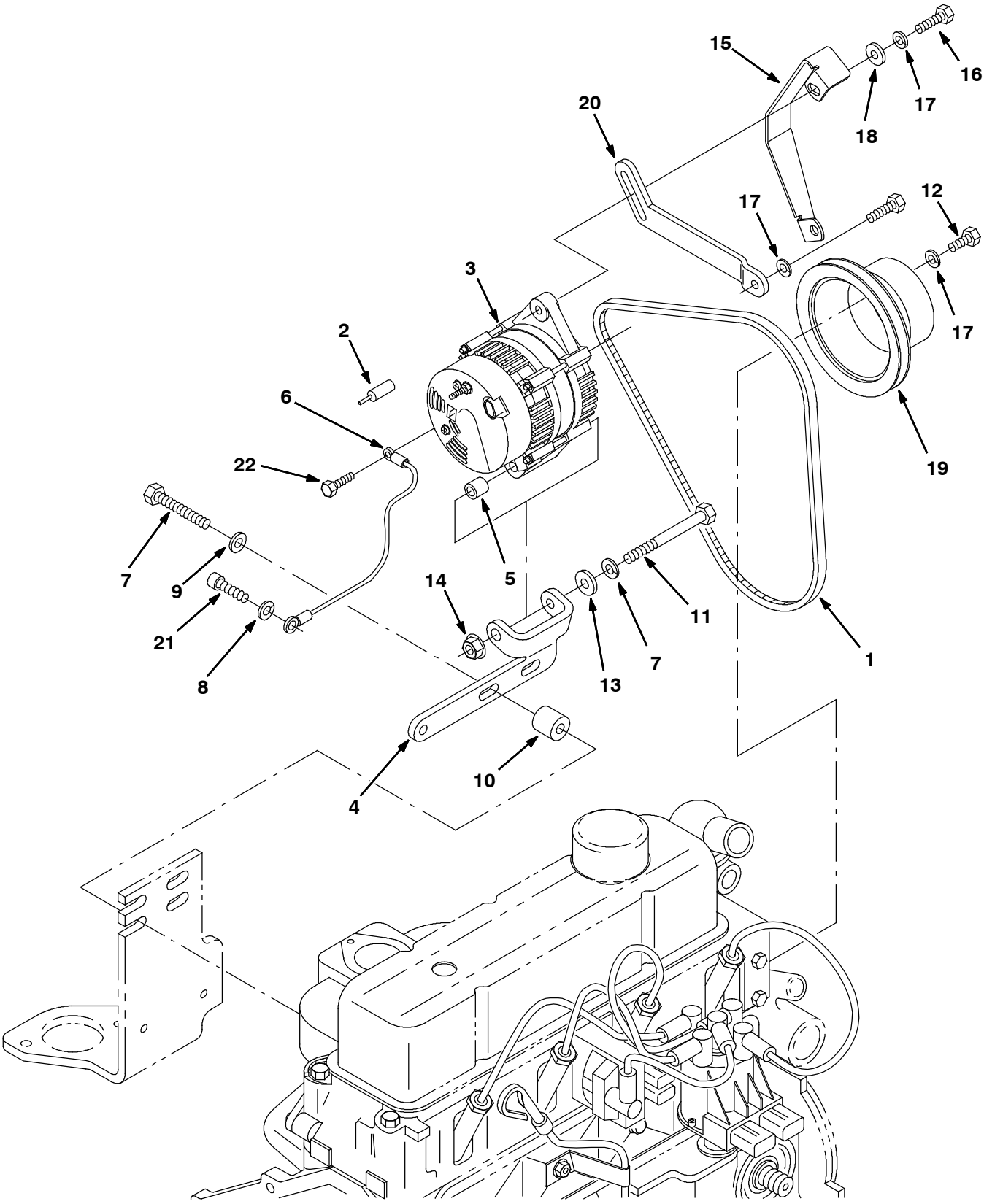

353869 - 800, G, LP

Fig. 25 - Engine Alternator Group (004937-005999)

Ref.	Part No.	Serial Number	Description	Qty.
1	64899	(004937-005999)	Belt, V, 40.0l [3v, 1	1
2	61363	(004937-005999)	Boot, Str, 0.12id 0.43id 0.25l, Blk	1
3	392611	(004937-005999)	Alternator, 12vdc, 075a [Valeo]	1
4	1008094	(004937-005999)	Bracket, Mtg, Alternator, Lower [Gm3.0l]	1
5	371526	(004937-005999)	Sleeve, Alternator	1
6	371527	(004937-005999)	Wire, Ground	1
7	371509	(004937-005999)	Washer, Lock, 0.38	2
8	27991	(004937-005999)	Screw, Hex, .38-16 X 2.25, G5	2
9	32492	(004937-005999)	Washer, Flat, 0.38, Std	2
10	35756	(004937-005999)	Tube, 0.50id 1.00od 01.0l, Stl, Pntd	2
11	371529	(004937-005999)	Screw, .38-24 X 4.00	1
12	07592	(004937-005999)	Screw, Hex, .31-24 X 0.75, G5	4
13	32485	(004937-005999)	Washer, Flat, 0.38, Sae	1
14	371528	(004937-005999)	Nut, Flng, .38-24	1
15	83581	(004937-005999)	Guard, Belt, Alternator	1
16	76956	(004937-005999)	Screw, Hex, .31-18 X 1.25, G5	1
17	393994	(004937-005999)	Washer, Lock, 0.31	6
18	32491	(004937-005999)	Washer, Flat, 0.31, Std	1
19	393998	(004937-005999)	Pulley, Fan	1
20	1007162	(004937-005999)	Arm, Adj, Alternator	1
21	371770	(004937-005999)	Screw	1
22	42011	(004937-005999)	Screw, Hex, 10-24 X 0.50, Ss	1

Fig. 26 - Engine Alternator Group (006000-006999)

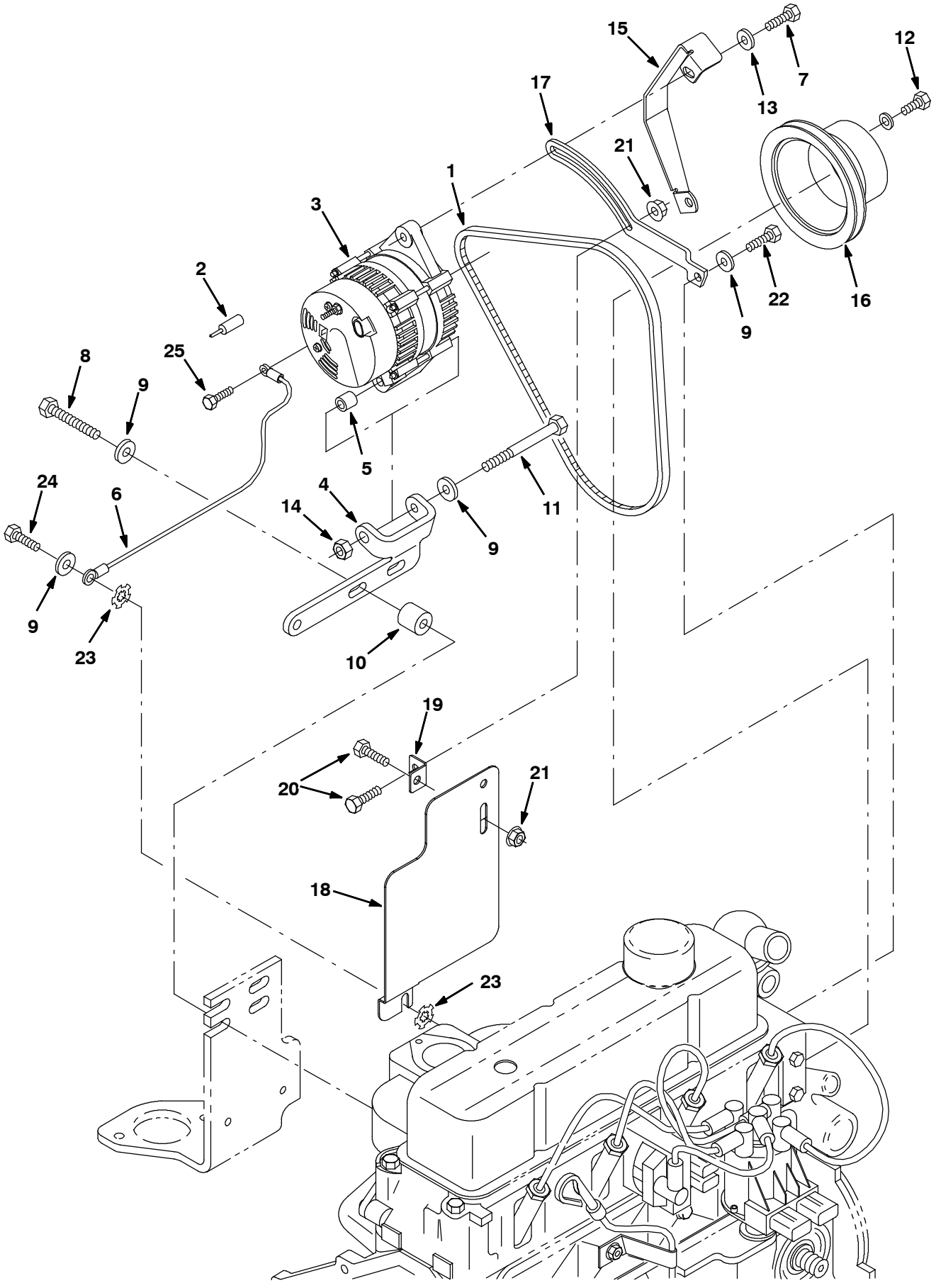

353869 - 800, G, LP

Fig. 26 - Engine Alternator Group (006000-006999)

Ref.	Part No.	Serial Number	Description	Qty.
1	393227	(006000-006999)	Belt, V, 39.6l [3v, Hc41]	1
2	61363	(006000-006999)	Boot, Str, 0.12id 0.43id 0.25l, Blk	1
3	392611	(006000-006999)	Alternator, 12vdc, 075a [Valeo]	1
4	1008094	(006000-006999)	Bracket, Mtg, Alternator, Lower [Gm3.0l]	1
5	371526	(006000-006999)	Sleeve, Alternator	1
6	371527	(006000-006999)	Wire, Ground	1
7	76955	(006000-006999)	Screw, Hex, .31-18 X 1.00, G5	1
8	27991	(006000-006999)	Screw, Hex, .38-16 X 2.25, G5	2
9	32485	(006000-006999)	Washer, Flat, 0.38, Sae	5
10	35756	(006000-006999)	Tube, 0.50id 1.00od 01.0l, Stl, Pntd	2
11	20177	(006000-006999)	Screw, Hex, .38-16 X 4.00, G5	1
12	07592	(006000-006999)	Screw, Hex, .31-24 X 0.75, G5	4
13	41186	(006000-006999)	Washer, Flat, Belleville, .31	1
14	50902	(006000-006999)	Nut, Hex, Lock, .38-16, Nl	1
15	83581	(006000-006999)	Guard, Belt, Alternator	1
16	393998	(006000-006999)	Pulley, Fan	1
17	1007162	(006000-006999)	Arm, Adj, Alternator	1
18	1019513	(006000-006999)	Plate, Shield, Heat	1
19	1008513	(006000-006999)	Angle, Shield, Heat	1
20	16735	(006000-006999)	Screw, Hex, M8 X 1.25 X 16, 8.8	2
21	07791	(006000-006999)	Nut, Hex, Flng, M8 X 1.25	2
22	21195	(006000-006999)	Screw, Hex, .38-16 X 0.75, G5	1
23	41142	(006000-006999)	Washer, Lock, Int-Ext, 0.38	2
24	21197	(006000-006999)	Screw, Hex, .38-16 X 1.00, G5	1
25	42011	(006000-006999)	Screw, Hex, 10-24 X 0.50, Ss	1

Fig. 27 - Engine Alternator Group (007000-)

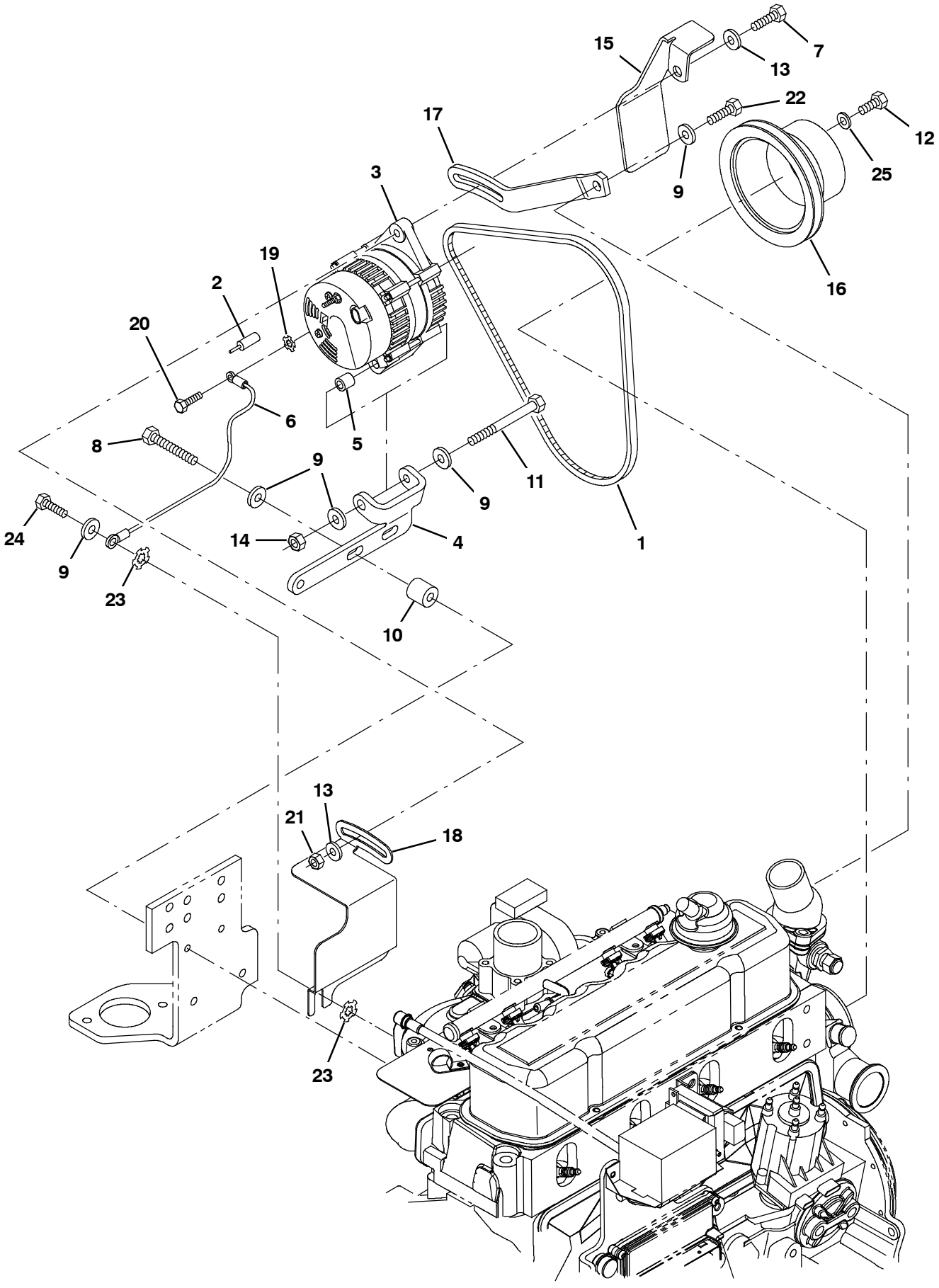

353869 - 800, G, LP

Fig. 27 - Engine Alternator Group (007000-)

Ref.	Part No.	Serial Number	Description	Qty.
1	393227	(007000-)	Belt, V, 39.6l [3v, Hc41]	1
2	61363	(007000-)	Boot, Str, 0.12id 0.43id 0.25l, Blk	1
3	392611	(007000-)	Alternator, 12vdc, 075a [Valeo]	1
4	1008094	(007000-)	Bracket, Mtg, Alternator, Lower [Gm3.0l]	1
5	371526	(007000-)	Sleeve, Alternator	1
6	371527	(007000-)	Wire, Ground	1
7	76955	(007000-)	Screw, Hex, .31- 18 X 1.00, G5	1
8	27991	(007000-)	Screw, Hex, .38- 16 X 2.25, G5	2
9	32485	(007000-)	Washer, Flat, 0.38, Sae	6
10	35756	(007000-)	Tube, 0.50id 1.00od 01.0l, Stl, Pntd	2
11	20177	(007000-)	Screw, Hex, .38- 16 X 4.00, G5	1
12	07592	(007000-)	Screw, Hex, .31- 24 X 0.75, G5	4
13	41186	(007000-)	Washer, Flat, Belleville, .31	2
14	50902	(007000-)	Nut, Hex, Lock, .38- 16, Nl	1
15	1008538	(007000-)	Bracket, Guard, Alternator, Hd [Gm3.0l]	1
16	393998	(007000-)	Pulley, Fan	1
17	1029649	(007000-)	Arm, Adjmt, Alternator	1
18	1030635	(007000-)	Shield, Heat, Alternator [2007]	1
19	32980	(007000-)	Washer, Lock, Int, 10	1
20	42011	(007000-)	Screw, Hex, 10- 24 X 0.50, Ss	1
21	07791	(007000-)	Nut, Hex, Flng, M8 X 1.25	1
22	21195	(007000-)	Screw, Hex, .38- 16 X 0.75, G5	1
23	41142	(007000-)	Washer, Lock, Int- Ext, 0.38	2
24	21197	(007000-)	Screw, Hex, .38- 16 X 1.00, G5	1
25	371865	(007000-)	Washer, Flat, 0.31, Hardened	4

Fig. 28 - Engine Oil Filter and Drain Group (004937-)

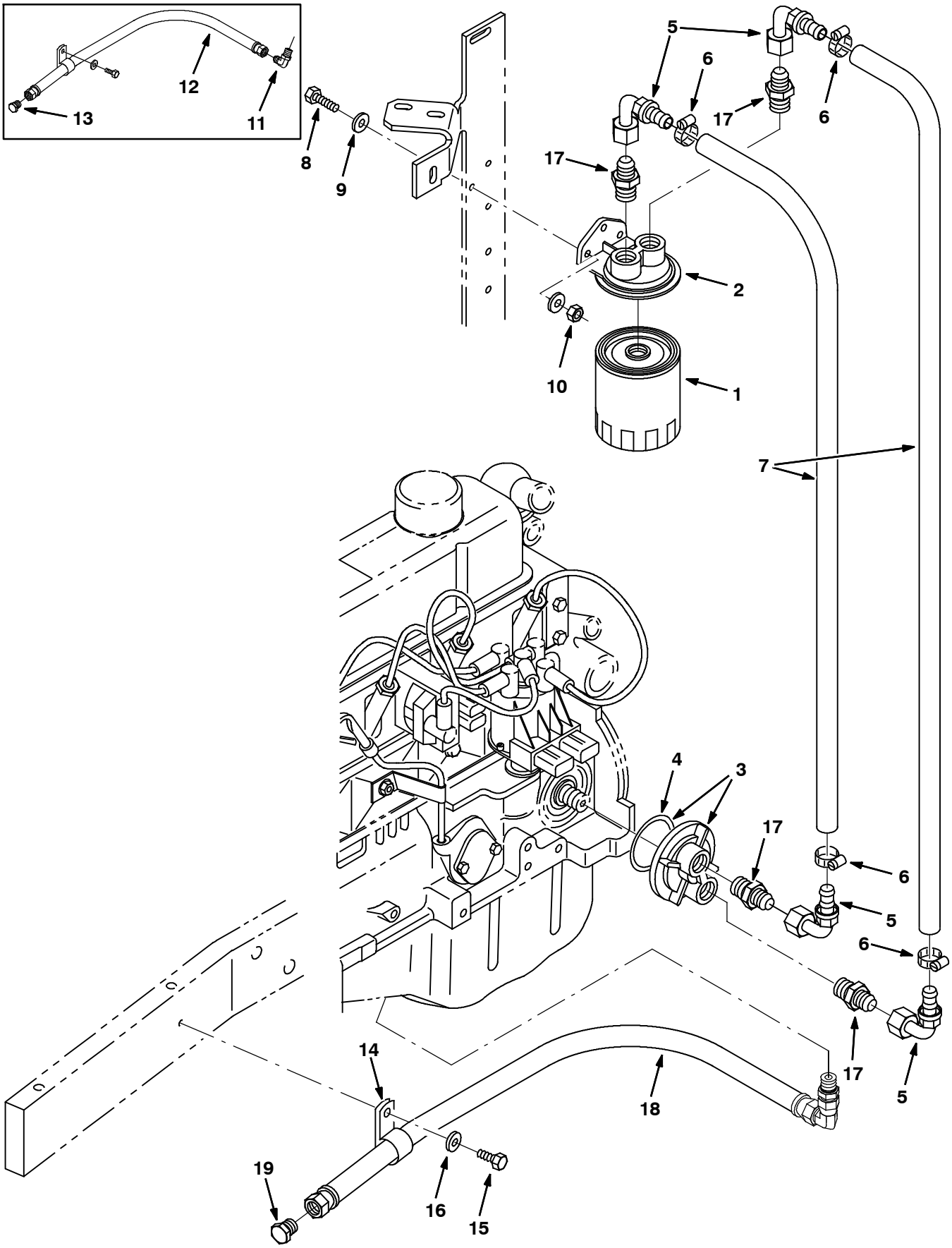

353874 - 800, G, LP

Fig. 28 - Engine Oil Filter and Drain Group (004937-)

	Ref.	Part No.	Serial Number	Description	Qty.
	1	393982	(004937-)	Element, Fltr, Oi	1
	2	371503	(004937-)	Mount, Fltr, Remote	1
▽	3	371504	(004937-)	Adapter, Fltr, Remote	1
▲	4	1032382	(004937-)	Seal, Org, .139 X 03.109 Id	1
	5	371500	(004937-)	Fitting, E90	4
	6	11399	(004937-)	Clamp, Hose, Wormdrive, 0.81- 1.50d, .50w	4
	7	371502	(004937-)	Hose, 0.50d X 41.00l	2
	8	25046	(004937-)	Screw, Hex, .25- 20 X 1.00, G5	2
	9	19066	(004937-)	Washer, Flat, 0.25b 0.56d .05, Pl, 10	2
	10	32981	(004937-)	Nut, Hex, Lock, .25- 20, Nl	2
	11	49934	(004937- 006999)	Fitting, Hyd, E90, Jm06/Pm06	1
	12	76762	(004937- 006999)	Hose, Hyd, Low06, Jf06str/Jf06str, 026.0	1
	13	19747	(004937- 006999)	Fitting, Hyd, Plug, Jm06	1
	14	58366	(004937-)	Clamp, Cable, Stl, 1.25d X 1.00w, 1hole	1
	15	12273	(004937-)	Screw, Hex, M8 X 1.25 X 20, Nl, Ss	1
	16	01685	(004937-)	Washer, Flat, 0.38b 0.88d .08, Ss	1
	17	371505	(004937-)	Fitting	4
	18	9006633	(007000-)	Hose, Drain, Eng Oil	1
	19	9006635	(007000-)	Fitting, Plug	1

Fig. 29 - Engine Carburetor and Governor Group, Gasoline (004000-004936)

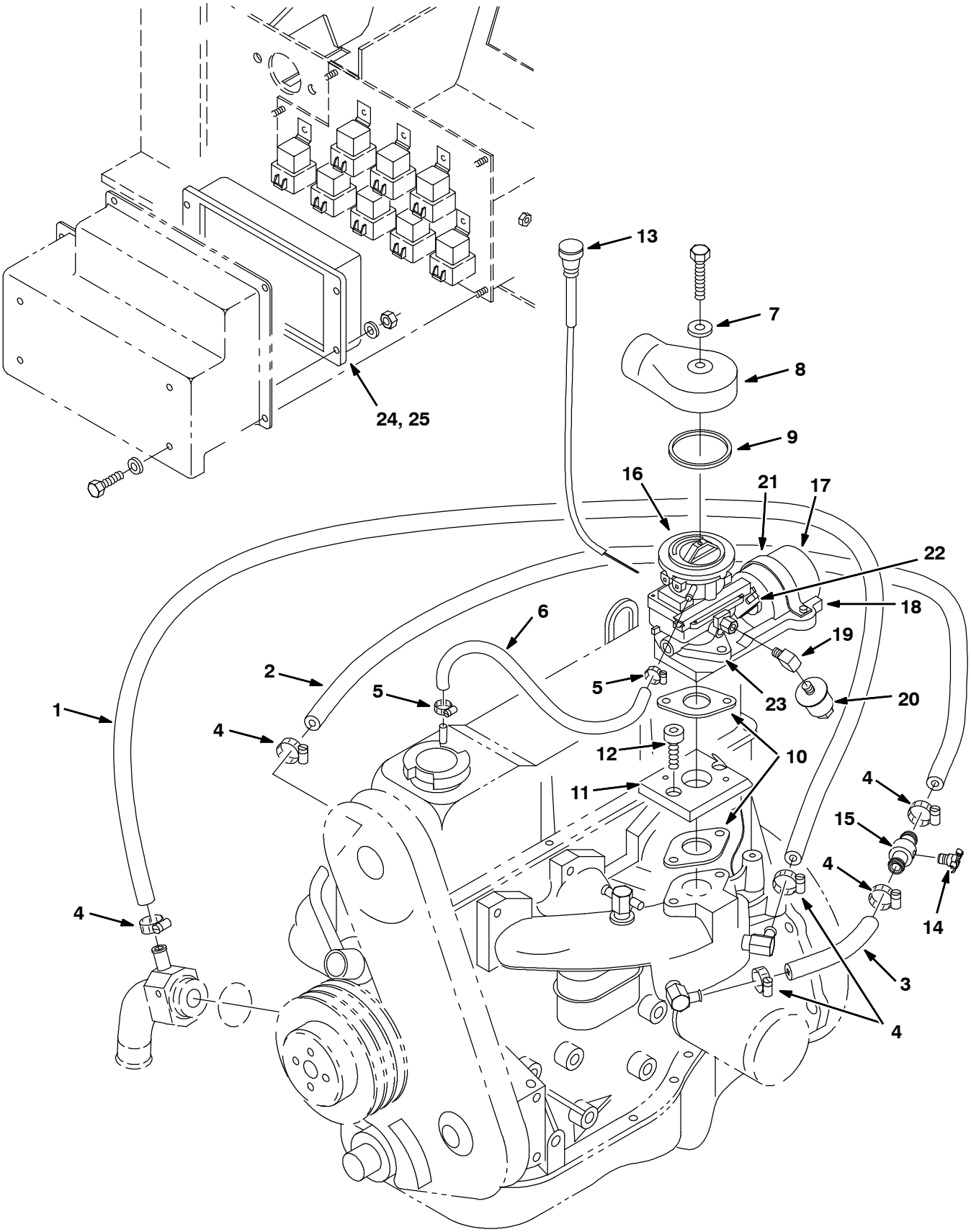

10610 - G

Fig. 29 - Engine Carburetor and Governor Group, Gasoline (004000- 004936)

	Ref.	Part No.	Serial Number	Description	Qty.
	1	30389	(004000- 004936)	Hose, Heater, 0.62id, 053.0l	1
	2	13048	(004000- 004936)	Hose, Heater, 0.62id, 038.0l	1
	3	60762	(004000- 004936)	Kit, Fi, Cab, [97]	1
	4	63810	(004000- 004936)	Clamp, Hose, Wormdrive, 0.56- 1.06d, .56w	6
	5	43844	(004000- 004936)	Clamp, Hose, Wormdrive, 0.25- 0.62d, .31w	2
	6	70876	(004000- 004309)	Hose, Rbr, 0.38id 0.62od 21.0l	1
	6	375718	(004310- 004936)	Hose, Rbr, Mold, 0.50id 0.38id [Epdm]	1
	7	24924	(004000- 004936)	Washer, Flat, 0.28b 0.62d .06, Nyl	1
	8	57934	(004000- 004936)	Adapter, Air- Intk, Carb, Gas	1
	9	16738	(004000- 004936)	Gasket, Carb, .06, 2.62id 3.00od, Rbr	1
	10	74443	(004000- 004936)	Gasket, Carb, .03, 1.18id, 2/2.5bc	2
	11	83686	(004000- 004936)	Adapter, Mtg, Carb [Ford 2.3]	1
	12	33951	(004000- 004936)	Screw, Soc, M6 X 1.00 X 20, 12.9	2
	13	47313A	(004000- 004936)	Cable, Cntrl, Choke, 67.1l, Knob	1
	14	83580	(004000- 004936)	Fitting, Brs, Drain Cock	1
	15	83578	(004000- 004936)	Tube, Bleed, Air, .62od 2.2l .12npt, Alm	1
▽		83678	(004000- 004306)	Governor Assy [Ford, 2.3 Gas, 800l]	1
▲▽		83639	(004000- 004306)	Governor, Gas	1
▲▲	16	78897	(004000- 004306)	Carburetor, Gas [F/ Lrg- 423, Vent, Ze]	1
▲▲	17	83683	(004000- 004306)	Actuator, Govnr, Gas/Lpg	1
▲▲	18	83682	(004000- 004306)	Bracket, Mtg, Govnr	1
▲▲	19	11984	(004000- 004306)	Fitting, Pipe, E90, Pf02/Pm02	1
▲▲	20	36050	(004000- 004306)	Filter, Fuel, In- Line [02pm/08if]	1
▲▲	21	83685	(004000- 004306)	Strap, Mtg, Actuator, Govnr	1
▲▲	22	83684	(004000- 004306)	Linkage Kit, Govnr	1
▲▲	23	74443	(004000- 004306)	Gasket, Carb, .03, 1.18id, 2/2.5bc	1
▲▽	24	374127	(004000- 004306)	Control Kit, Govnr, Replmt [All Purpose]	1
▲▲		374625	(004000- 004306)	Plug Kit, Controlbox	2
▽		385415	(004307- 004936)	Governor Assy, Ford 2.5 Gas	1
▲▽		83639	(004307- 004936)	Governor, Gas	1
▲▲	16	385414	(004307- 004936)	Carburetor, Gas [F/ Lrg- 425, Vent, Ze]	1
▲▲	17	83683	(004307- 004936)	Actuator, Govnr, Gas/Lpg	1
▲▲	18	83682	(004307- 004936)	Bracket, Mtg, Govnr	1
▲▲	19	11984	(004307- 004936)	Fitting, Pipe, E90, Pf02/Pm02	1
▲▲	20	36050	(004307- 004936)	Filter, Fuel, In- Line [02pm/08if]	1
▲▲	21	83685	(004307- 004936)	Strap, Mtg, Actuator, Govnr	1
▲▲	22	83684	(004307- 004936)	Linkage Kit, Govnr	1
▲▲	23	74443	(004307- 004936)	Gasket, Carb, .03, 1.18id, 2/2.5bc	1
▲▲	24	374127	(xxxxxx- 004936)	Control Kit, Govnr, Replmt [All Purpose]	1
▽	25	1040835	(004307- xxxxxx)	Control, Govnr [All Purpose]	1
▲		374625	(004307- xxxxxx)	Plug Kit, Controlbox	2

Fig. 30 - Engine Electronic Fuel Ignition Group, Gas (004937-005999)

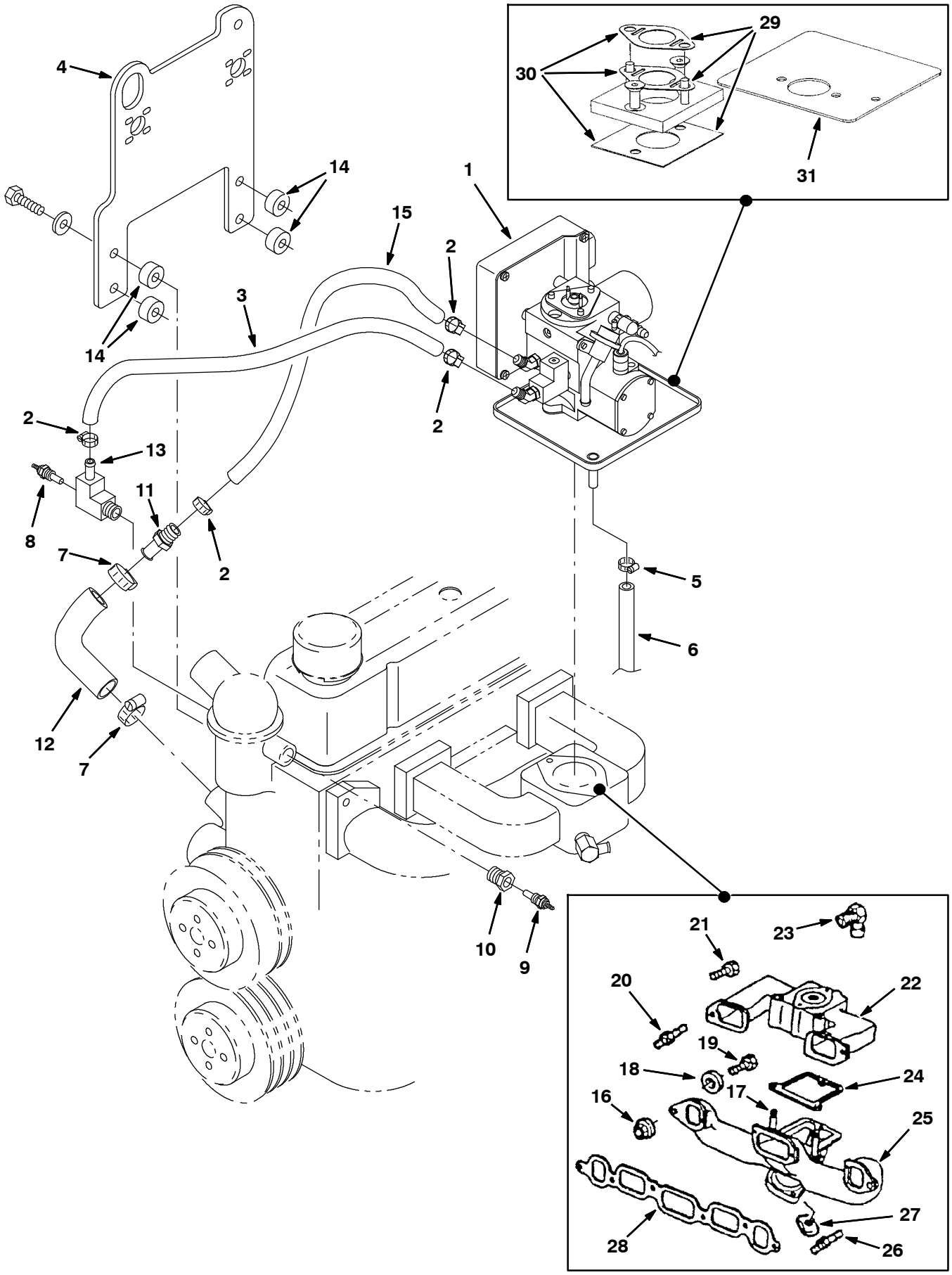

353844 - 800, G

Fig. 30 - Engine Electronic Fuel Ignition Group, Gas (004937- 005999)

	Ref.	Part No.	Serial Number	Description	Qty.
	1	371896	(004937- 005999)	Housing Assy, Throttle, Gas, [With Ecu] (See Breakdowns)	1
	1	371897	(004937- 005999)	Housing Assy, Throttle, Gas, [Without Ecu] (See Breakdowns)	1
	2	371538	(004937- 005999)	Clamp	5
	3	371532	(004937- 005999)	Hose, Heater, 0.38id	1
	4	392570	(004937- 005999)	Plate, Mtg, Reg	1
	5	86824	(004937- 005999)	Clamp, Hose, Wormdrive, 0.50- 1.06d, .50w	1
	6	16387	(004937- 005999)	Hose, Fuel, 0.50id, 52.0l	1
	7	11399	(004937- 005999)	Clamp, Hose, Wormdrive, 0.81- 1.50d, .50w	2
	8	9006591	(004937- 005999)	Sensor, Temp, Coolant	1
	9	36165	(004937- 005999)	Send- Unit, Water, Temp, 06npt [Datcon]	1
	10	47167	(004937- 005999)	Fitting, Brs, Str, Pf06/Pm08	1
	11	371763	(004937- 005999)	Fitting, Hose	1
	12	371765	(004937- 005999)	Hose	1
	13	371766	(004937- 005999)	Fitting, Elbow	1
	14	371767	(004937- 005999)	Spacer	4
	15	769808	(004937- 005999)	Hose, Fuel, 0.38id, 18.0l	1
	16	393905	(004937- 005999)	Nut, Manifold, Exhaust	8
	17	393906	(004937- 005999)	Stud, Intake To Exhaust Manifold	2
	18	393907	(004937- 005999)	Washer, Manifold, Exhaust	-
	19	393898	(004937- 005999)	Bolt	3
	20	393908	(004937- 005999)	Stud, Intake Manifold To Cyl Head	1
	21	393909	(004937- 005999)	Bolt, Intake Manifold	-
	22	393910	(004937- 005999)	Manifold, Intake	1
	23	393911	(004937- 005999)	Fitting, Manifold, Intake	1
	24	393912	(004937- 005999)	Gasket, Manifold, Exhaust	1
	25	393913	(004937- 005999)	Manifold, Exhaust	1
	26	393914	(004937- 005999)	Stud, Pipe, Exhaust	2
	27	393915	(004937- 005999)	Clamp, Manifold	4
	28	393916	(004937- 005999)	Gasket, Manifold, Intake	1
▽	29	371646	(004937- 005999)	Adapter Kit, Manifold	1
▲	30	371647	(004937- 005999)	Gasket Kit, Manifold	1
	31	371658	(004937- 005999)	Shield, Heat	1

Fig. 31 - Engine Electronic Fuel Ignition Group, Gas (006000-006999)

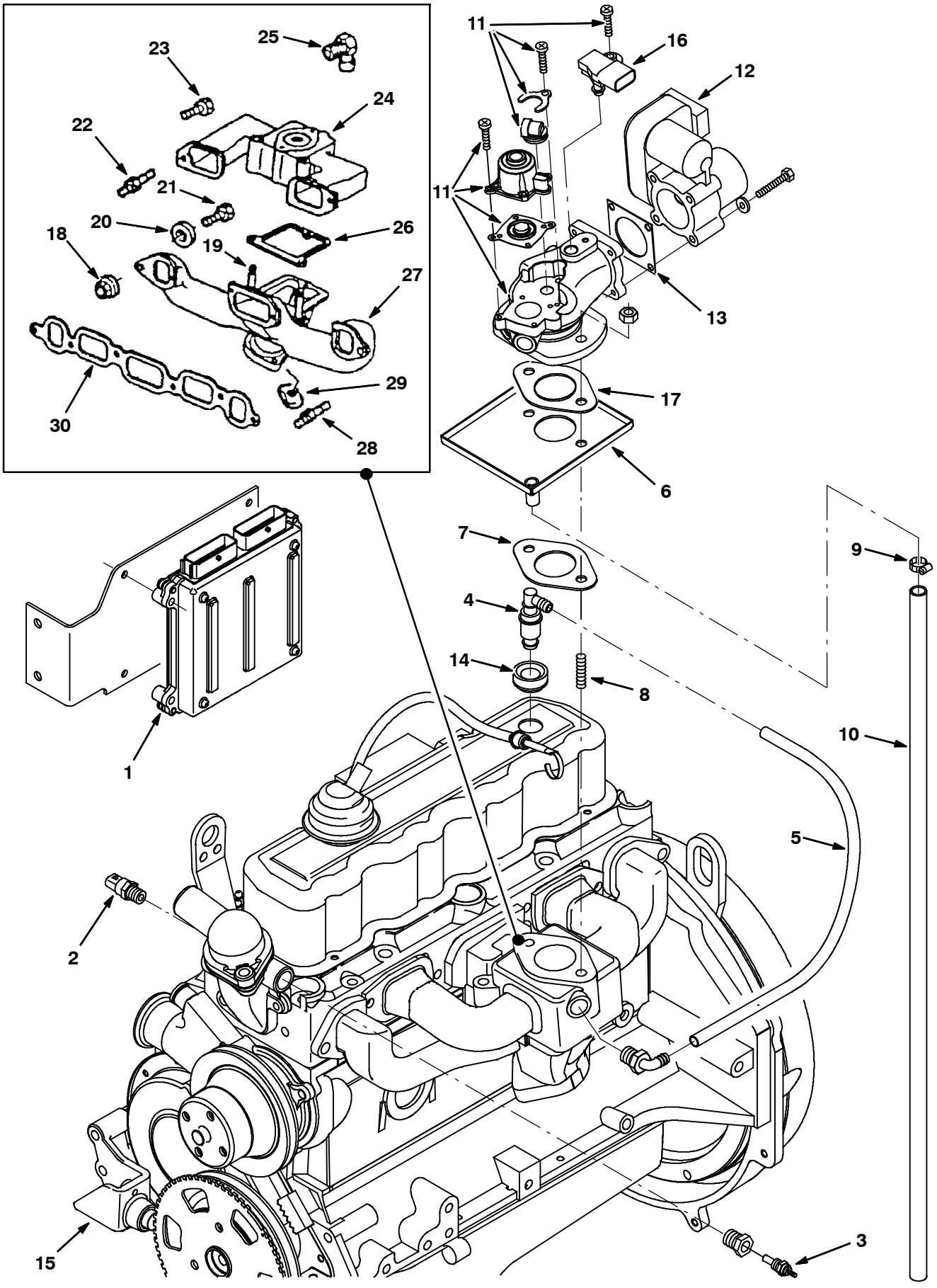

354174 - 800, G

Fig. 31 - Engine Electronic Fuel Ignition Group, Gas (006000-006999)

Ref.	Part No.	Serial Number	Description	Qty.
1	372860	(006000-006999)	Module, Ecu, Gas [Gm 3.0l]	1
2	372891	(006000-006999)	Sensor, Temp, Coolant	1
3	372472	(006000-006999)	Sensor, Temp	1
4	372483	(006000-006999)	Valve [Pcv]	1
5	372489	(006000-006999)	Hose, 9.5mm X 450mm [Pcv]	1
6	1013350	(006000-006999)	Tray Wldt, Drip, Gas [3.0l]	1
7	372490	(006000-006999)	Gasket, Carb	1
8	372466	(006000-006999)	Stud, .38-16 X 1.2l	2
9	63810	(006000-006999)	Clamp, Hose, Wormdrive, 0.56-1.06d, .56w	1
10	16387	(006000-006999)	Hose, Fuel, 0.50id, 52.0l	1
11	372488	(006000-006999)	Housing Assy, Throttle, Gas	1
12	384974	(006000-006999)	Housing, Throttle, 40mm [Bosch]	1
13	372545	(006000-006999)	Gasket, Body, Throttle [1.6l]	1
14	393984	(006000-006999)	Grommet	1
15	372492	(006000-006999)	Sensor, Spd, Timing Wheel [3.0l]	1
16	372493	(006000-006999)	Sensor [Tmap]	1
17	372490	(006000-006999)	Gasket, Carb	1
18	393905	(006000-006999)	Nut, Manifold, Exhaust	8
19	393906	(006000-006999)	Stud, Intake To Exhaust Manifold	2
20	393907	(006000-006999)	Washer, Manifold, Exhaust	-
21	393898	(006000-006999)	Bolt	3
22	393908	(006000-006999)	Stud, Intake Manifold To Cyl Head	1
23	393909	(006000-006999)	Bolt, Intake Manifold	-
24	393910	(006000-006999)	Manifold, Intake	1
25	393911	(006000-006999)	Fitting, Manifold, Intake	1
26	393912	(006000-006999)	Gasket, Manifold, Exhaust	1
27	393913	(006000-006999)	Manifold, Exhaust	1
28	393914	(006000-006999)	Stud, Pipe, Exhaust	2
29	393915	(006000-006999)	Clamp, Manifold	4
30	393916	(006000-006999)	Gasket, Manifold, Intake	1

Fig. 32 - Engine Electronic Fuel Ignition Group, Gas (007000-)

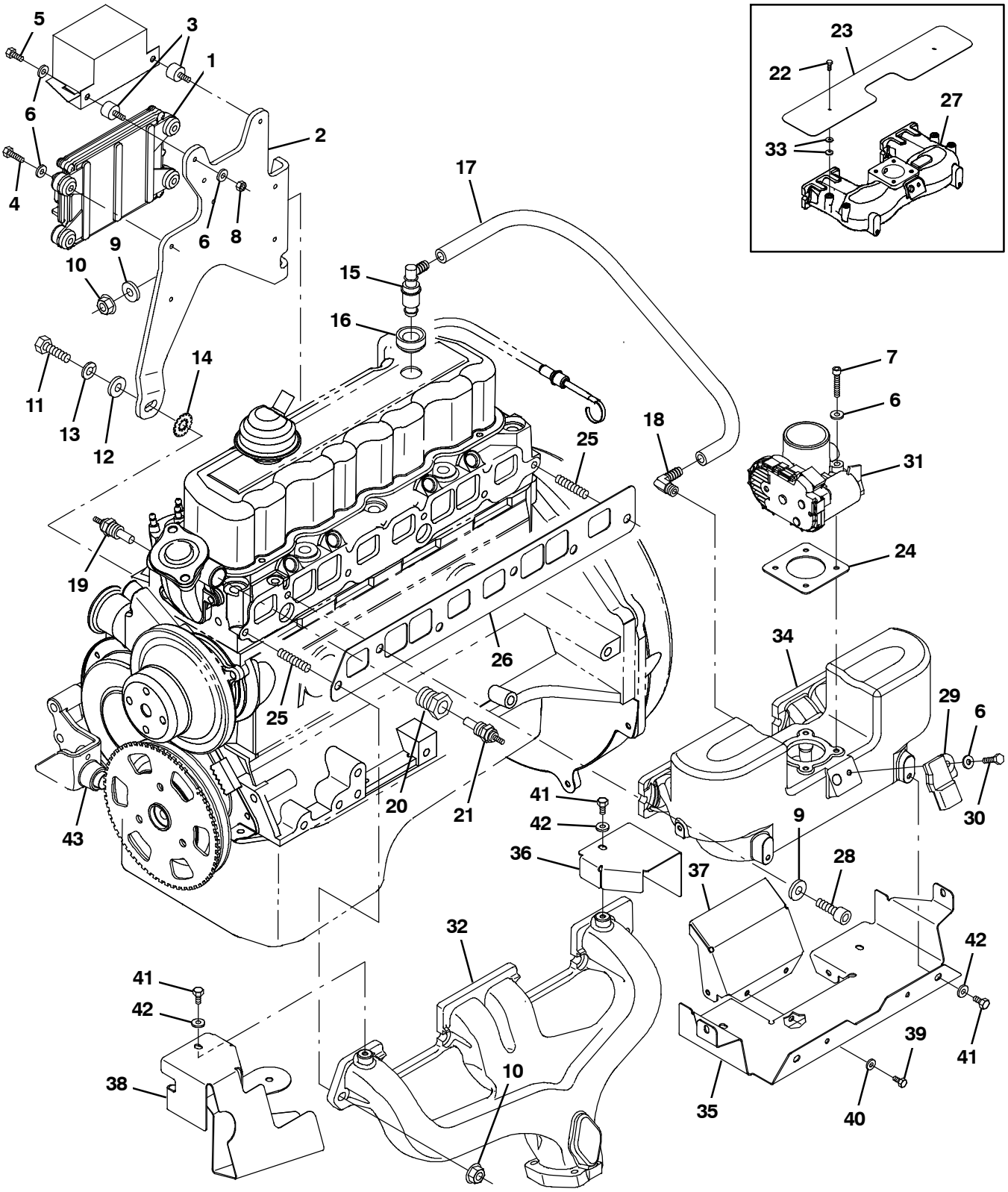

354174 - G

Fig. 32 - Engine Electronic Fuel Ignition Group, Gas (007000-)

Ref.	Part No.	Serial Number	Description	Qty.
1	1032804	(007000- 007593)	Module, Ecu, Gas [Gm3.0l 2007]	1
1	1062362	(007593-)	Module, Ecu, Gas [Gm3.0L 2010]	1
2	385008	(007000-)	Bracket, Box, Relay	1
3	372470	(007000-)	Isolator, Box, Relay	2
4	25047	(007000-)	Screw, Hex, .25- 20 X 1.25, G5	4
5	19315	(007000-)	Screw, Hex, .25- 20 X 0.50, G5	2
6	32490	(007000-)	Washer, Flat, 0.25, Std	9
7	06948	(007000-)	Screw, Hex, M6 X 1.00 X 45, 8.8	4
8	19312	(007000-)	Nut, Hex, Std, .25- 20	2
9	371877	(007000-)	Washer, Flat, 0.38, Hardened	5
10	27980	(007000-)	Nut, Hex, Flng, .38- 16	3
11	371553	(007000-)	Screw, .38- 16 X 1.00	1
12	371877	(007000-)	Washer, Flat, 0.38, Hardened	1
13	371509	(007000-)	Washer, Lock, 0.38	1
14	371875	(007000-)	Washer, Lock, Int / Ext, 0.38	1
15	9006589	(007000-)	Valve [Pc]	1
16	393984	(007000-)	Grommet	1
17	385001	(007000-)	Hose, Fuel, .38d, Rbr[16”L]	1
18	385002	(007000-)	Fitting, E90	1
19	9006591	(007000-)	Sensor, Temp, Coolant	1
20	385000	(007000-)	Fitting, Bshg	1
21	372472	(007000-)	Sensor, Temp	1
22	385007	(007000- 007593)	Screw, M6 X 10mm	2
23	385006	(007000- 007593)	Shield, Heat, Manifold	1
24	372545	(007000-)	Gasket, Body, Throttle [1.6l]	1
25	372466	(007000-)	Stud, .38- 16 X 1.2l	2
26	385003	(007000-)	Gasket, Manifold, Intake	1
27	385004	(007000- 007593)	Manifold, Intake [2007]	1
28	10830	(007000-)	Screw, Soc, .38- 16 X 1.00, Al	4
29	384985	(007000-)	Sensor [T Map]	1
30	19317	(007000-)	Screw, Hex, .25- 20 X 0.75, G5	1
31	384974	(007000-)	Housing, Throttle, 40mm [Bosch]	1
32	1060653	(007000-)	Manifold, Exhaust [Gm3.0l]	1
33	32490	(007000- 007593)	Washer, Flat, 0.25, Std	4
34	9008194	(007593-)	Manifold, Intake [Gm3.0l 2010]	1
35	9008799	(007593-)	Shield, Heat [Gm3.0l 2010]	1
36	9008800	(007593-)	Shield, Heat [Gm3.0l 2010]	1
37	9008801	(007593-)	Shield, Heat [Gm3.0l 2010]	1
38	9008802	(007593-)	Shield, Heat, Alternator [Gm3.0l 10]	1
39	763025	(007593-)	Screw, Hex, M5 X 0.80 X 10, Fl	4
40	19065	(007593-)	Washer, Flat, 0.19b 0.44d .05, Pl, 08	4
41	87308	(007593-)	Screw, Hex, M6 X 1.00 X 12, 8.8	8
42	32483	(007593-)	Washer, Flat, 0.25, Sae	8
43	372492	(007000-)	Sensor, Spd, Timing Wheel [3.0l]	1

Fig. 33 - Engine Carburetor and Governor Group, LPG (004000-004936)

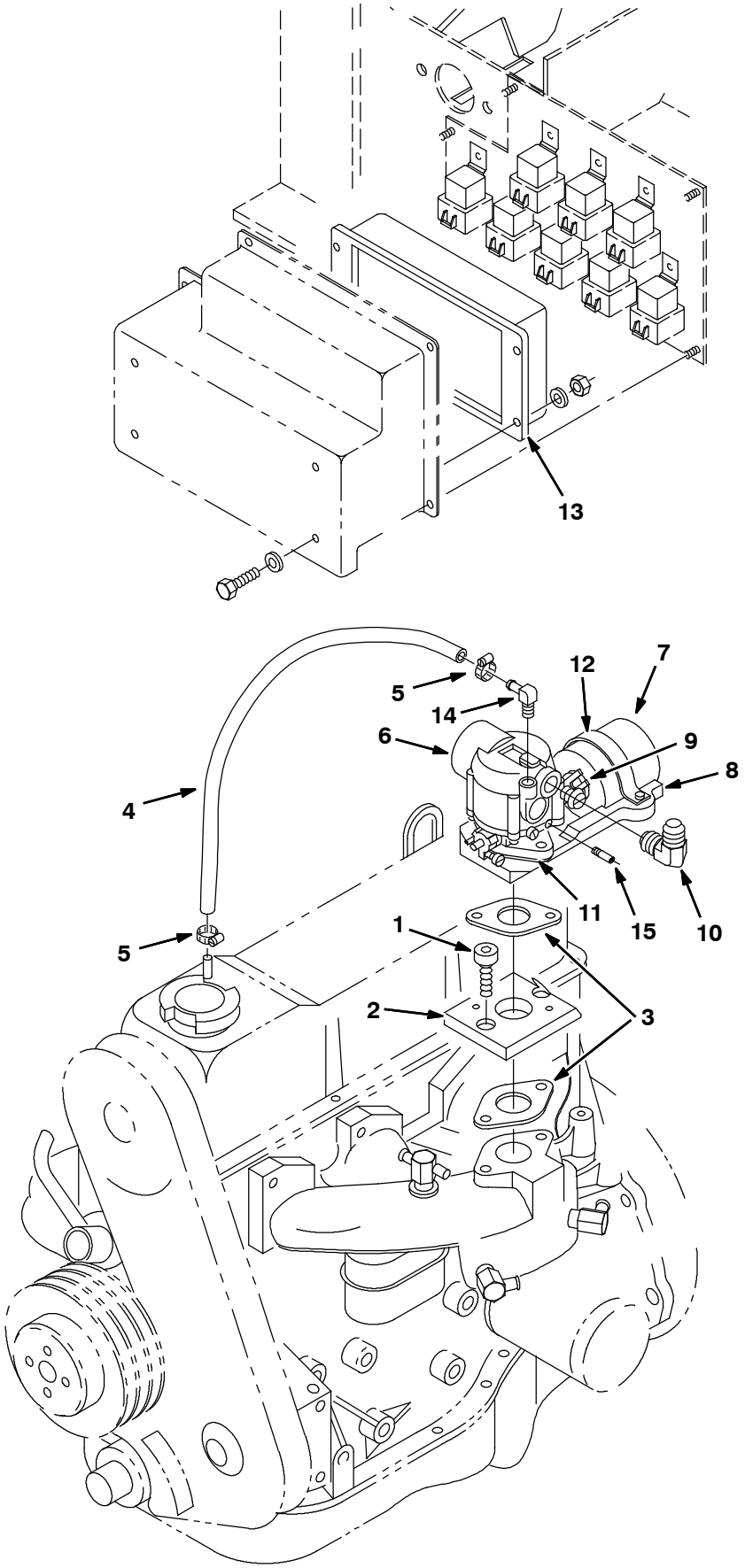

10618 - LP

Fig. 33 - Engine Carburetor and Governor Group, LPG (004000- 004936)

	Ref.	Part No.	Serial Number	Description	Qty.
	1	33951	(004000- 004936)	Screw, Soc, M6 X 1.00 X 20, 12.9	2
	2	83686	(004000- 004936)	Adapter, Mtg, Carb [Ford 2.3]	1
	3	74443	(004000- 004936)	Gasket, Carb, .03, 1.18id, 2/2.5bc	2
	4	70876	(004000- 004309)	Hose, Rbr, 0.38id 0.62od 21.0l	1
	4	375718	(004310- 004936)	Hose, Rbr, Mold, 0.50id 0.38id [Epdm]	1
	5	43844	(004000- 004936)	Clamp, Hose, Wormdrive, 0.25- 0.62d, .31w	2
▽		83679	(004000- 004936)	Governor Assy [Ford, 2.3/2.5] Rep.Bynone	1
▲▽		83640	(004000- 004936)	Governor, Lpg	1
▲▲	6	73017	(004000- 004936)	Carburetor, Lpg [F/ Lrg- 423, W/ Gasket]	1
▲▲		78881	(004000- 004936)	Carb Kit, Repair	1
▲▲	7	83683	(004000- 004936)	Actuator, Govnr, Gas/Lpg	1
▲▲	8	83682	(004000- 004936)	Bracket, Mtg, Govnr	1
▲▲	9	83684	(004000- 004936)	Linkage Kit, Govnr	1
▲▲	10	69097	(004000- 004936)	Fitting, Hyd, E90, Jm10/Pm06	1
▲▲	11	74443	(004000- 004936)	Gasket, Carb, .03, 1.18id, 2/2.5bc	1
▲▲	12	83685	(004000- 004936)	Strap, Mtg, Actuator, Govnr	1
▲▲	13	374127	(004000- 004936)	Control Kit, Govnr, Replmt [All Purpose]	1
▲▲	14	53029	(004000- 004936)	Fitting, Brs, E90, Em05/Pm02	1
▲	15	74402	(004000- 004936)	Fitting, Brs, Str, .25- 28/Spcl [Carb]	1

Fig. 34 - Engine Vaporizer Group, LPG (004000-004818)

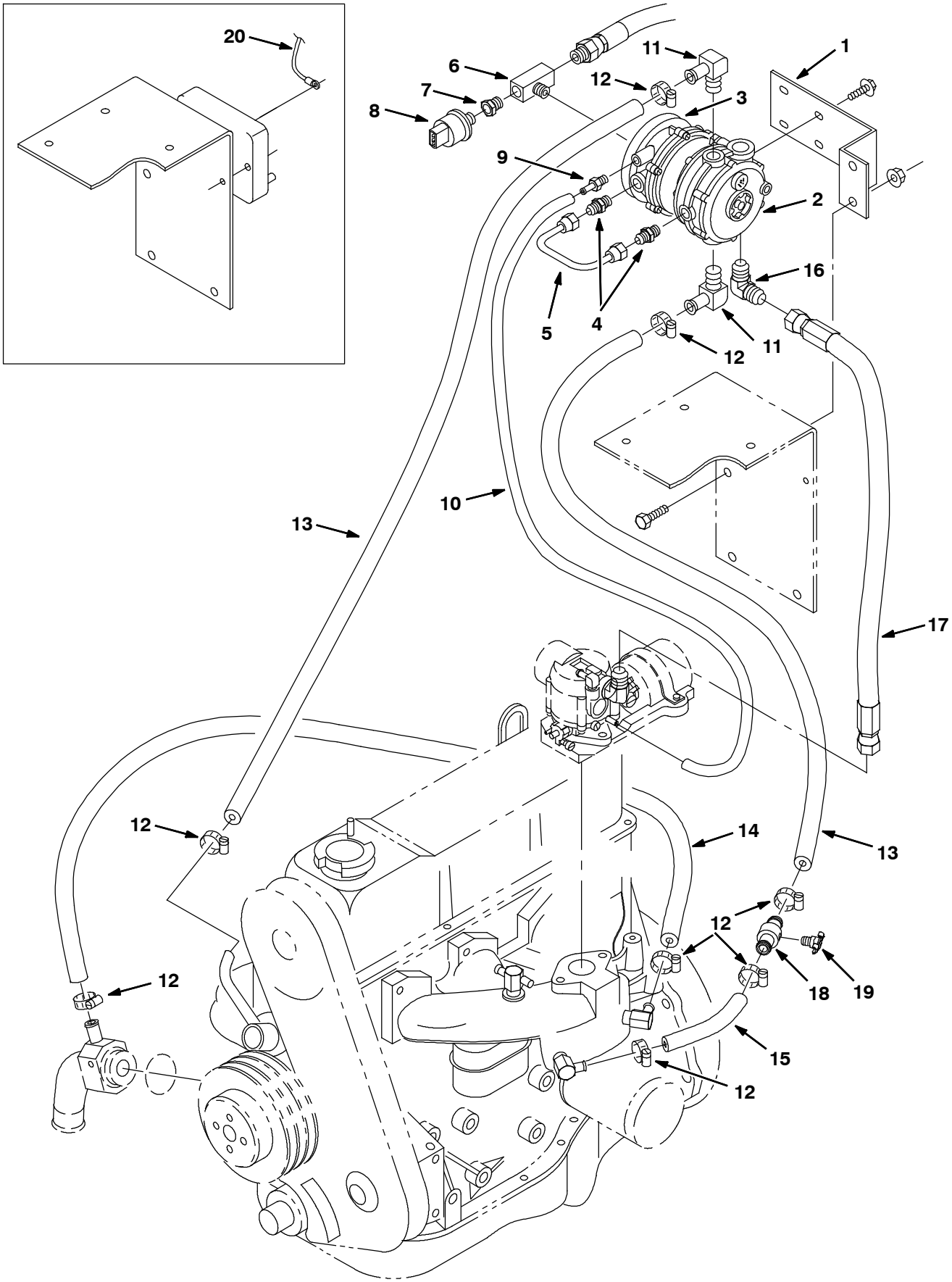

10616 - LP

Fig. 34 - Engine Vaporizer Group, LPG (004000-004818)

	Ref.	Part No.	Serial Number	Description	Qty.
	1	70849	(004000-004818)	Bracket, Mtg, Vaporizer	1
▽	2	374648	(004000-004818)	Vaporizer / Reg, Lpg [Impco]	1
▲		374649	(004000-004818)	Vaporizer Kit, Replmt	1
▽	3	73020	(004000-004818)	Filter, Fuelock	1
▲		65527	(004000-004818)	Fuelock Kit, Replmt	1
	4	15724	(004000-004818)	Fitting, Hyd, Str, Jm06/Pm04	2
	5	59808	(004000-004818)	Fuelline, .38d 06sf/06sf, Stl	1
	6	53268	(004000-004818)	Fitting, Brs, Tee, Pf04/Pf04/Pm04, Br	1
	7	17414	(004000-004818)	Fitting, Hyd, Str, Pf02/Pm04	1
	8	23156	(004000-004818)	Switch, Press, 0070psi Spst Nc 12vdc 08a	1
	9	40607	(004000-004818)	Fitting, Brs, Str, Bm03/Pm02	1
	10	34072	(004000-004818)	Hose, Vacuum, 0.16id X 021.0l	1
	11	51839	(004000-004818)	Fitting, Brs, E90, Em10/Pm06	2
	12	63810	(004000-004818)	Clamp, Hose, Wormdrive, 0.56-1.06d, .56w	8
	13	72979	(004000-004818)	Hose, Heater, 0.62id, 020.0l	2
	14	30389	(004000-004818)	Hose, Heater, 0.62id, 053.0l	1
	15	60726	(004000-004818)	Hose, Heater, 0.62id, 015.0l Rep.Bynone	1
	16	46611	(004000-004818)	Fitting, Hyd, E90, Jm10/Pm08	1
	17	60725	(004000-004818)	Hose, Lpg, Med10, Jf14str/Jf14str, 028.0	1
	18	83578	(004000-004818)	Tube, Bleed, Air, .62od 2.2l .12npt, Alm	1
	19	83580	(004000-004818)	Fitting, Brs, Drain Cock	1
	20	374615	(004000-004215)	Wire Kit, Ground, Repair [2.3l Ford Lpg]	1

Fig. 35 - Engine Vaporizer Group, LPG (004819-004936)

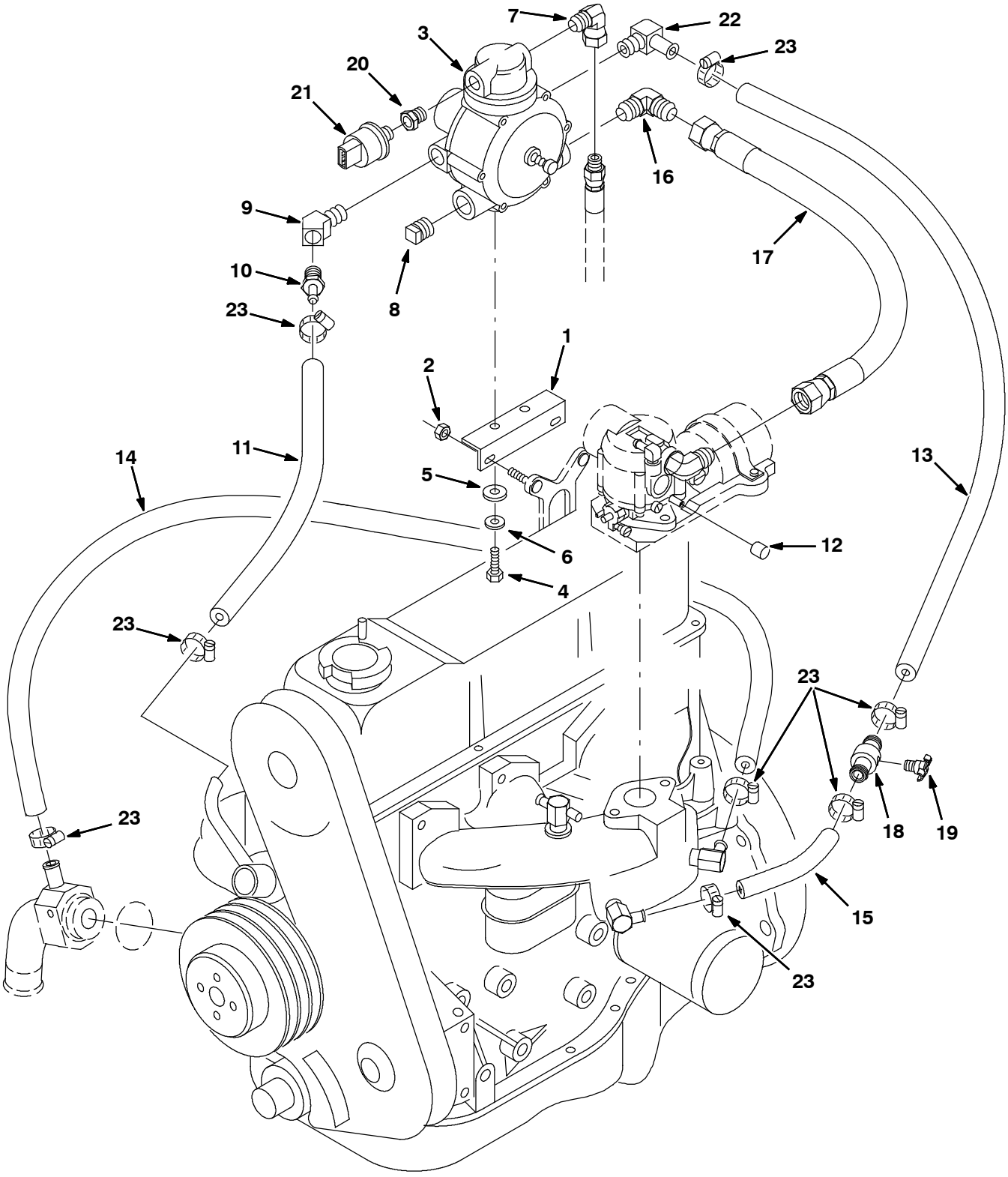

10616 - LP

Fig. 35 - Engine Vaporizer Group, LPG (004819- 004936)

	Ref.	Part No.	Serial Number	Description	Qty.
	1	374154	(004819- 004936)	Angle, Mtg, .12 X 1 X 1 X 4.5l	1
	2	07789	(004819- 004936)	Nut, Hex, Flng, M5 X 0.80	2
▽	3	383170	(004819- 004936)	Controller Kit, Lpg, 12vdc	1
▲		383014	(004819- 004936)	Vaporizer Kit, Repair, F/383170	1
	4	06942	(004819- 004936)	Screw, Hex, M6 X 1.00 X 16, 8.8	2
	5	32483	(004819- 004936)	Washer, Flat, 0.25, Sae	2
	6	32982	(004819- 004936)	Washer, Lock, Int, 0.25	2
	7	27048	(004819- 004936)	Fitting, Brs, E90, Pf04/Pm04	1
	8	17521	(004819- 004936)	Fitting, Pipe, Plug, Pm08, Sq Head	1
	9	1043095	(004819- 004936)	Fitting, Brs, E45, Pf06/Pm06	1
	10	27767	(004819- 004936)	Fitting, Brs, Str, Em10/Pm06	1
	11	60726	(004819- 004936)	Hose, Heater, 0.62id, 015.0l Rep.Bynone	1
	12	63810	(004819- 004936)	Clamp, Hose, Wormdrive, 0.56- 1.06d, .56w	8
	13	72979	(004819- 004936)	Hose, Heater, 0.62id, 020.0l	2
	14	30389	(004819- 004936)	Hose, Heater, 0.62id, 053.0l	1
	15	60726	(004819- 004936)	Hose, Heater, 0.62id, 015.0l Rep.Bynone	1
	16	46611	(004819- 004936)	Fitting, Hyd, E90, Jm10/Pm08	1
	17	60725	(004819- 004936)	Hose, Lpg, Med10, Jf14str/Jf14str, 028.0	1
	18	83578	(004819- 004936)	Tube, Bleed, Air, .62od 2.2l .12npt, Alm	1
	19	83580	(004819- 004936)	Fitting, Brs, Drain Cock	1
	20	17414	(004819- 004936)	Fitting, Hyd, Str, Pf02/Pm04	1
	21	23156	(004819- 004936)	Switch, Press, 0070psi Spst Nc 12vdc 08a	1
	22	51839	(004819- 004936)	Fitting, Brs, E90, Em10/Pm06	1
	23	63810	(004819- 004936)	Clamp, Hose, Wormdrive, 0.56- 1.06d, .56w	8

Fig. 36 - Engine Electronic Fuel Ignition and Vaporizer Group, LPG (004937-005999)

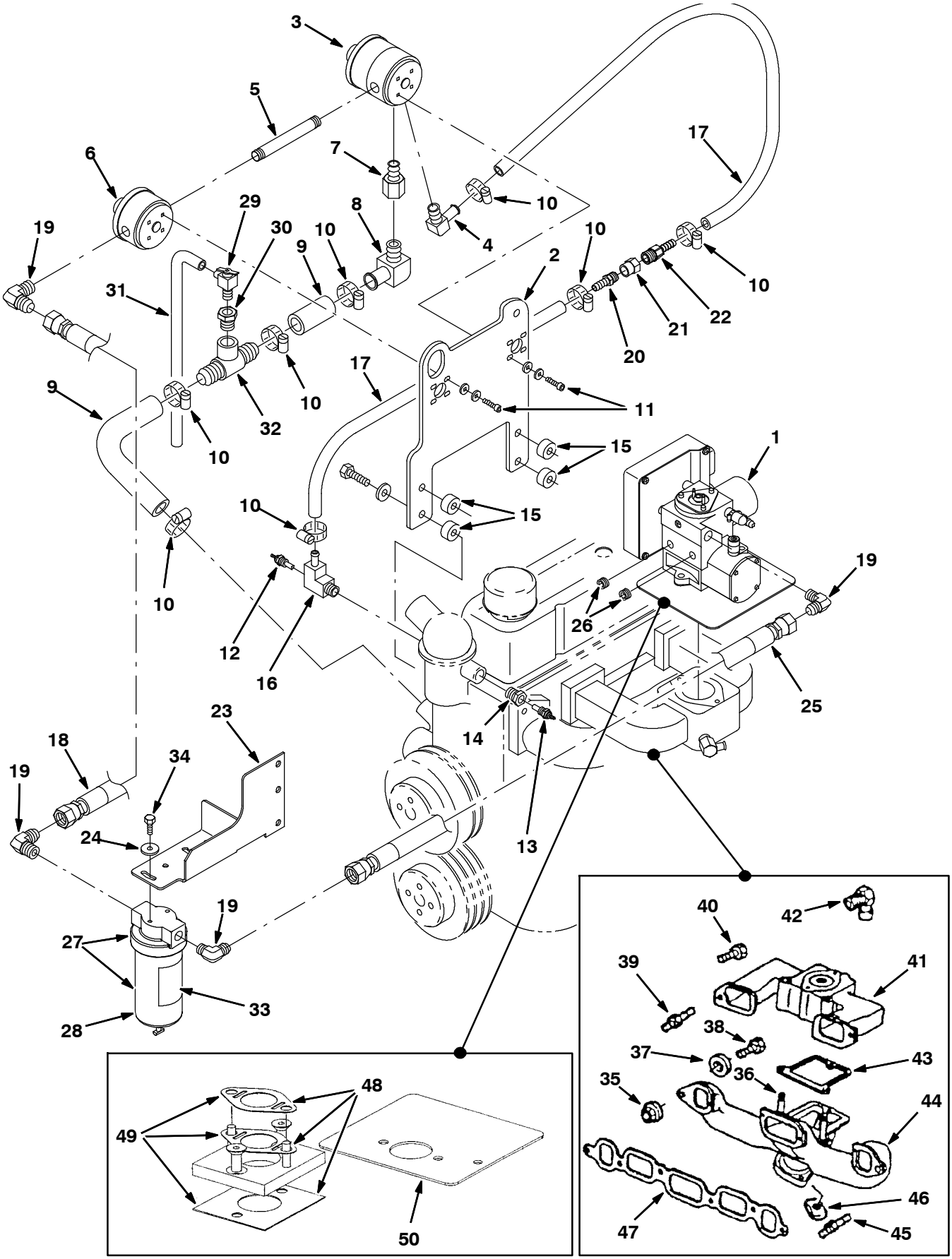

354329 - 800, LP

Fig. 36 - Engine Electronic Fuel Ignition and Vaporizer Group, LPG (004937- 005999)

	Ref.	Part No.	Serial Number	Description	Qty.
	1	371894	(004937- 005999)	Housing Assy, Throttle, Lpg, [With Ecu] (See Breakdowns)	1
	1	371895	(004937- 005999)	Housing Assy, Throttle, Lpg, [Without Ecu] (See Breakdowns)	1
	2	392570	(004937- 005999)	Plate, Mtg, Reg	1
	3	371749	(004937- 005999)	Vaporizer, Lpg	1
	4	371754	(004937- 005999)	Fitting	1
	5	371755	(004937- 005999)	Pipe	1
	6	371750	(004937- 005999)	Regulator	1
	7	371768	(004937- 005999)	Fitting	1
	8	371757	(004937- 005999)	Fitting	1
	9	393972	(004937- 005999)	Hose, Conv	1
	10	11399	(004937- 005999)	Clamp, Hose, Wormdrive, 0.81- 1.50d, .50w	8
	11	371759	(004937- 005999)	Screw	8
	12	371764	(004937- 005999)	Sensor, Temp, Water	1
	13	36165	(004937- 005999)	Send- Unit, Water, Temp, 06npt [Datcon]	1
	14	47167	(004937- 005999)	Fitting, Brs, Str, Pf06/Pm08	1
	15	371767	(004937- 005999)	Spacer	4
	16	371766	(004937- 005999)	Fitting, Elbow	1
	17	769806	(004937- 005999)	Hose, Fuel, 0.38id, 21.0l	1
	18	1017477	(004937- 005999)	Hose, Lpg, Med08, Jf08str/Jf08str, 037.5	1
	19	1017272	(004937- 005999)	Fitting, Hyd, E90, Jm08/Pm04	4
	20	150516	(004937- 005999)	Fitting, Brs, Str, Bm06/Pm04	1
	21	1017239	(004937- 005999)	Fitting, Brs, Rst, Pf04/.69- 16f, .063	1
	22	1017598	(004937- 005999)	Fittting, Plstc, Str, Bm06/M.69- 16	1
	23	1017080	(004937- 005999)	Bracket, Fltr, Lpg [6600]	1
	24	29570	(004937- 005999)	Washer, Flat, 0.28b 1.00d .06, Stl	2
	25	1017476	(004937- 005999)	Hose, Lpg, Med08, Jf08str/Jf08str, 035.0	1
	26	02247	(004937- 005999)	Fitting, Pipe, Plug, Pm04, Hex Soc	2
▽	27	1017500	(004937- 005999)	Filter, Fuel, Lpg [Coalescent]	1
▲	28	372937	(004937- 005999)	Element, Fltr, Fuel, Lpg[Coalescent]	1
	29	51305	(004937- 005999)	Fitting, Draincock, E90, .25npt	1
	30	311828	(004937- 005999)	Cs, Fitting, Brs, Str, Pm08/Pf04	1
	31	392258	(004937- 005999)	Hose, Pvc, Clr, 0.38id 0.56od 013.0l	1
	32	64740	(004937- 005999)	Fitting, Plstc, Tee, Bm12/Bm12/Pf08, Br	1
	33	1017662	(004937- 005999)	Label, Instr, Fltr Drain	1
	34	19317	(004937- 005999)	Screw, Hex, .25- 20 X 0.75, G5	2
		130041	(004937- 005999)	Tie, Cable, Nyl, 11.5l .19w	6
	35	393905	(004937- 005999)	Nut, Manifold, Exhaust	8
	36	393906	(004937- 005999)	Stud, Intake To Exhaust Manifold	2
	37	393907	(004937- 005999)	Washer, Manifold, Exhaust	-
	38	393898	(004937- 005999)	Bolt	3
	39	393908	(004937- 005999)	Stud, Intake Manifold To Cyl Head	1
	40	393909	(004937- 005999)	Bolt, Intake Manifold	-
	41	393910	(004937- 005999)	Manifold, Intake	1
	42	393911	(004937- 005999)	Fitting, Manifold, Intake	1
	43	393912	(004937- 005999)	Gasket, Manifold, Exhaust	1
	44	393913	(004937- 005999)	Manifold, Exhaust	1
	45	393914	(004937- 005999)	Stud, Pipe, Exhaust	2
	46	393915	(004937- 005999)	Clamp, Manifold	4
	47	393916	(004937- 005999)	Gasket, Manifold, Intake	1

354329 - 800, LP

Fig. 36 - Engine Electronic Fuel Ignition and Vaporizer Group, LPG (004937- 005999)

	Ref.	Part No.	Serial Number		Description	Qty.
▽	48	371646	(000000-	)	Kit, Adaptor, Manifold	1
▲	49	371647	(000000-	)	Kit, Gasket, Manifold	1
	50	371658	(000000-	)	Shield, Heat	1

Fig. 37 - Engine Electronic Fuel Ignition and Vaporizer Group, LPG (006000-006999)

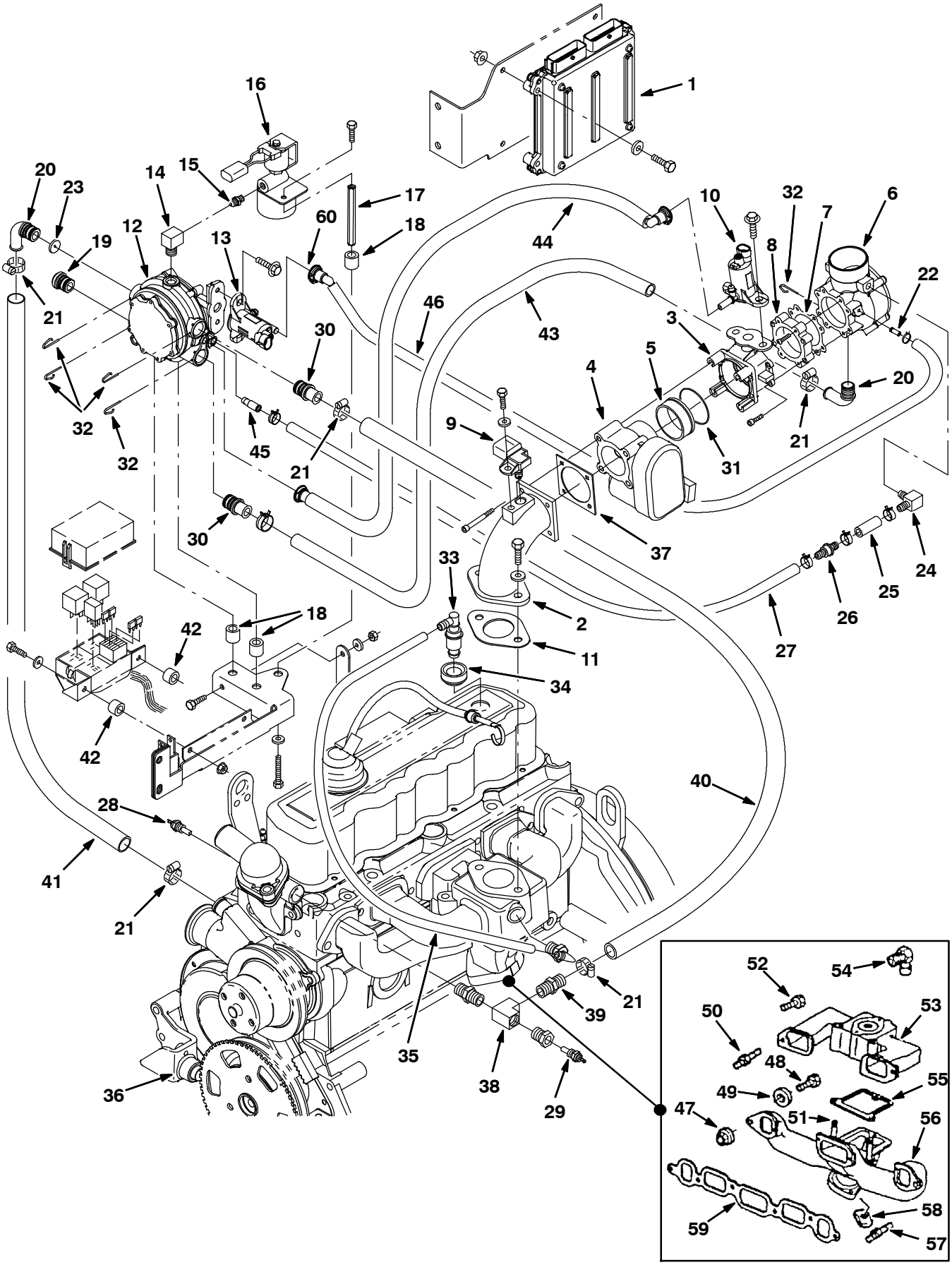

354175 - 800, LP

Fig. 37 - Engine Electronic Fuel Ignition and Vaporizer Group, LPG (006000-006999)

	Ref.	Part No.	Serial Number	Description	Qty.
	1	372859	(006000-006999)	Module, Ecu, Lpg [Gm 3.0l]	1
	2	372495	(006000-006999)	Adapter, Intake, Lpg [3.0l]	1
	3	372496	(006000-006999)	Adapter, Valve, Fuel Trim	1
	4	384974	(006000-006999)	Housing, Throttle, 40mm [Bosch]	1
	5	372498	(006000-006999)	Sleeve, Throttle, Plstc [Bosch]	1
	6	372899	(006000-006999)	Housing Assy, Thr	1
	7	372608	(006000-006999)	Gasket	1
	8	372612	(006000-006999)	Adapter, Throttle Body	1
	9	372493	(006000-006999)	Sensor [Tmap]	1
	10	372497	(006000-006999)	Valve, Trim, Fuel, Lpg	1
	11	372490	(006000-006999)	Gasket, Carb	1
	12	372500	(006000-006999)	Regulator, Lpg	1
	13	372501	(006000-006999)	Valve, Trim, Press, Lpg	1
	14	372611	(006000-006999)	Fitting, Str, E90, .25npt	1
	15	372610	(006000-006999)	Fitting, Nipple, .25npt, Brs	1
▽	16	372503	(006000-006999)	Valve, Fuelock, Lpg, Wire Connector	1
▲		372615	(006000-006999)	Filter Kit, Fuelock, Lpg	1
	17	372577	(006000-006999)	Spacer, Sppt, Fltr Lock Off	1
	18	372518	(006000-006999)	Isolator, Mtg, Vaporizer, Rbr	3
	19	372515	(006000-006999)	Fitting, Cap	1
	20	372512	(006000-006999)	Fitting, E70	2
	21	63810	(006000-006999)	Clamp, Hose, Wormdrive, 0.56-1.06d, .56w	5
	22	372511	(006000-006999)	Fitting, Hose, Vacuum, .25	1
	23	372517	(006000-006999)	Restrictor, Jet, Coolant	1
	24	372510	(006000-006999)	Fitting, E90	1
	25	372507	(006000-006999)	Hose, Balancing, Press, 045mm	1
	26	372569	(006000-006999)	Valve, Check	1
	27	372506	(006000-006999)	Hose, Balancing, Press, 680mm	1
	28	372891	(006000-006999)	Sensor, Temp, Coolant	1
	29	372472	(006000-006999)	Sensor, Temp	1
	30	372514	(006000-006999)	Fitting, Str	2
	31	372484	(006000-006999)	Seal, Org	1
	32	372523	(006000-006999)	Pin, Retainer	5
	33	372483	(006000-006999)	Valve [Pcv]	1
	34	393984	(006000-006999)	Grommet	1
	35	372489	(006000-006999)	Hose, 9.5mm X 450mm [Pcv]	1
	36	372492	(006000-006999)	Sensor, Spd, Timing Wheel [3.0l]	1
	37	372545	(006000-006999)	Gasket, Body, Throttle [1.6l]	1
	38	372527	(006000-006999)	Fitting, Pipe, Tee, Pf06/Pf06/Pm06	1
	39	372526	(006000-006999)	Fitting, Hose, 10hose/Pm06	1
	40	372531	(006000-006999)	Hose, Mold, .62 X 37.0	1
	41	372528	(006000-006999)	Hose, Mold, .62 To .75	1
	42	372470	(006000-006999)	Isolator, Box, Relay	2
	43	372508	(006000-006999)	Hose, Fuel, 165mm	1
	44	372504	(006000-006999)	Hose, Valve, Fuel Trim, 325mm	1
	45	372516	(006000-006999)	Fitting, Brs, Adapter	1
	46	372505	(006000-006999)	Hose, Valve, Press Trim, 405mm	1
	47	393905	(006000-006999)	Nut, Manifold, Exhaust	8
	48	393906	(006000-006999)	Stud, Intake To Exhaust Manifold	2
	49	393907	(006000-006999)	Washer, Manifold, Exhaust	-
	50	393898	(006000-006999)	Bolt	3

354175 - 800, LP

Fig. 37 - Engine Electronic Fuel Ignition and Vaporizer Group, LPG (006000- 006999)

Ref.	Part No.	Serial Number	Description	Qty.
51	393908	(006000- 006999)	Stud, Intake Manifold To Cyl Head	1
52	393909	(006000- 006999)	Bolt, Intake Manifold	-
53	393910	(006000- 006999)	Manifold, Intake	1
54	393911	(006000- 006999)	Fitting, Manifold, Intake	1
55	393912	(006000- 006999)	Gasket, Manifold, Exhaust	1
56	393913	(006000- 006999)	Manifold, Exhaust	1
57	393914	(006000- 006999)	Stud, Pipe, Exhaust	2
58	393915	(006000- 006999)	Clamp, Manifold	4
59	393916	(006000- 006999)	Gasket, Manifold, Intake	1
60	9004539	(006000- 006999)	Clamp, Valve, Trim [Impco]	1

Fig. 38 - Engine Electronic Fuel Ignition and Vaporizer Group, LPG (007000- 007593)

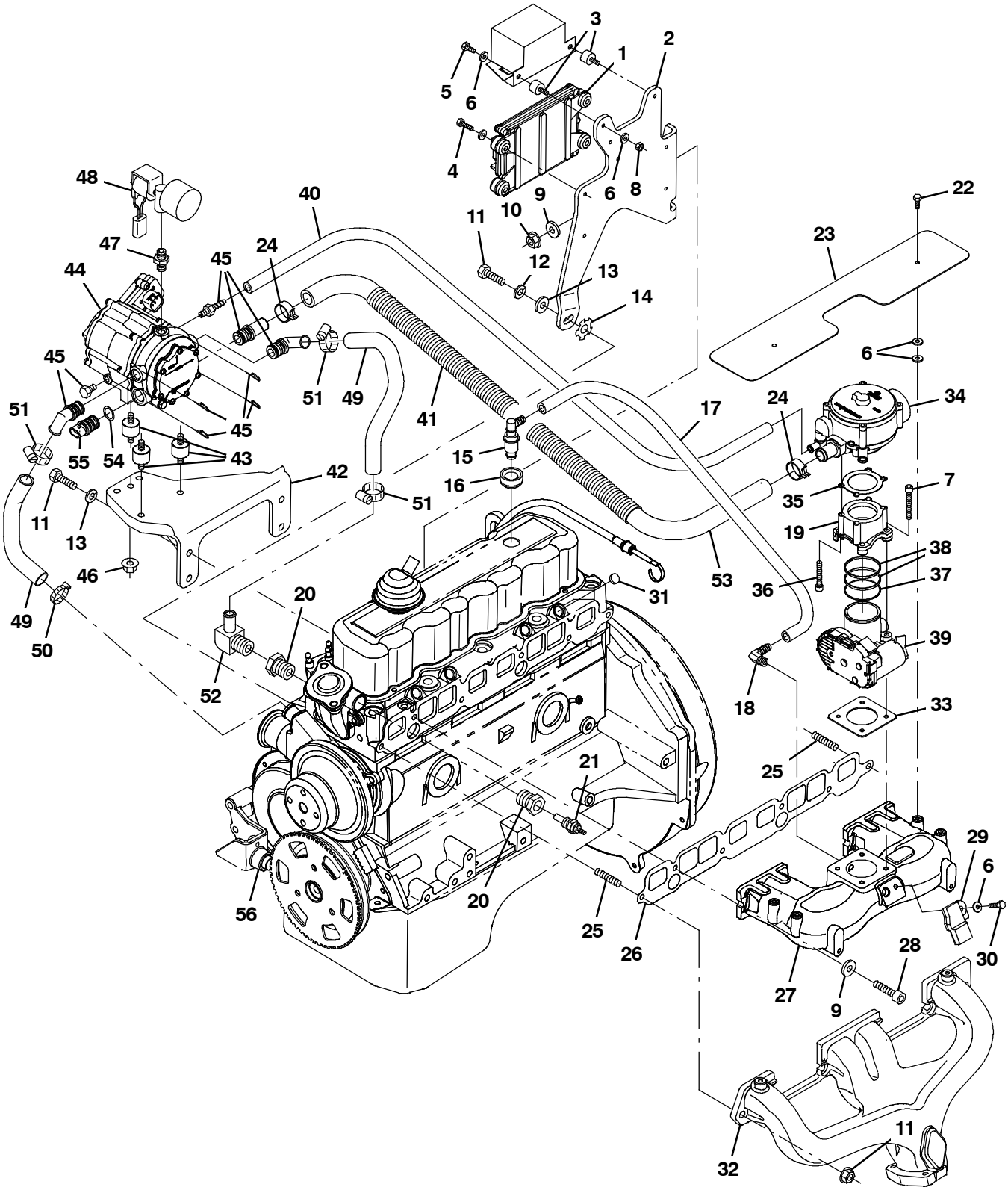

354175 - 800, LP

Fig. 38 - Engine Electronic Fuel Ignition and Vaporizer Group, LPG (007000- 007593)

Ref.	Part No.	Serial Number	Description	Qty.
1	1032805	(007000- 007593)	Module, Ecu, Lpg [Gm3.0l 2007]	1
2	385008	(007000- 007593)	Bracket, Box, Relay	1
3	372470	(007000- 007593)	Isolator, Box, Relay	2
4	25047	(007000- 007593)	Screw, Hex, .25- 20 X 1.25, G5	4
5	19315	(007000- 007593)	Screw, Hex, .25- 20 X 0.50, G5	2
6	32490	(007000- 007593)	Washer, Flat, 0.25, Std	13
7	385016	(007000- 007593)	Screw, Soc, M6 X 1.00 X 70	4
8	19312	(007000- 007593)	Nut, Hex, Std, .25- 20	2
9	371877	(007000- 007593)	Washer, Flat, 0.38, Hardened	5
10	27980	(007000- 007593)	Nut, Hex, Flng, .38- 16	3
11	21197	(007000- 007593)	Screw, Hex, .38- 16 X 1.00, G5	5
12	371877	(007000- 007593)	Washer, Flat, 0.38, Hardened	1
13	371509	(007000- 007593)	Washer, Lock, 0.38	5
14	371875	(007000- 007593)	Washer, Lock, Int / Ext, 0.38	1
15	9006589	(007000- 007593)	Valve [Pc]	1
16	393984	(007000- 007593)	Grommet	1
17	385001	(007000- 007593)	Hose, Fuel, .38d, Rbr[16”L]	1
18	385002	(007000- 007593)	Fitting, E90	1
19	384996	(007000- 007593)	Adapter, Valve, 400mm [Bosch]	1
20	385000	(007000- 007593)	Fitting, Bshg	2
21	372472	(007000- 007593)	Sensor, Temp	1
22	385007	(007000- 007593)	Screw, M6 X 10mm	2
23	385006	(007000- 007593)	Shield, Heat, Manifold	1
24	384979	(007000- 007593)	Clamp, Hose, Spring, 0.62d	2
25	372466	(007000- 007593)	Stud, .38- 16 X 1.2l	2
26	385003	(007000- 007593)	Gasket, Manifold, Intake	1
27	385004	(007000- 007593)	Manifold, Intake [2007]	1
28	10830	(007000- 007593)	Screw, Soc, .38- 16 X 1.00, Al	4
29	372493	(007000- 007593)	Sensor [T Map]	1
30	19317	(007000- 007593)	Screw, Hex, .25- 20 X 0.75, G5	1
31	372579	(007000- 007593)	Plug, Hole, Injector	4
32	1060653	(007000- 007593)	Manifold, Exhaust [Gm3.0l]	1
33	372545	(007000- 007593)	Gasket, Body, Throttle [1.6l]	1
34	385012	(007000- 007593)	Valve, Lpg [Mixer]	1
35	1037313	(007000- 007593)	Gasket, Lpg, Adapter [Gm 2007]	1
36	385017	(007000- 007593)	Screw, Soc, #12- 24 X 1.50	4
37	1037311	(007000- 007593)	Seal, Org, Mixer, Lpg	1
38	1037312	(007000- 007593)	Gasket, Lpg, Mixer [Gm 2007]	2
39	384974	(007000- 007593)	Housing, Throttle, 40mm [Bosch]	1
40	384973	(007000- 007593)	Hose, Supply, Gas, .25id	1
41	384971	(007000- 007593)	Cover, Hose	1
42	385014	(007000- 007593)	Bracket [Epr]	2
43	384986	(007000- 007593)	Isolator [Epr]	3
44	384977	(007000- 007593)	Regulator [Ep]	1
45	384978	(007000- 007593)	Fitting Kit [Epr]	1
46	385015	(007000- 007593)	Nut, Flng, M8	3
47	372529	(007000- 007593)	Fitting, Nipple, .25mal	1
48	384975	(007000- 007593)	Valve, Lock Off	1
49	372528	(007000- 007593)	Hose, Mold, .62 To .75	2
50	63810	(007000- 007593)	Clamp, Hose, Wormdrive, 0.56- 1.06d, .56w	1

354175 - 800, LP

Fig. 38 - Engine Electronic Fuel Ignition and Vaporizer Group, LPG (007000- 007593)

Ref.	Part No.	Serial Number	Description	Qty.
51	372539	(007000- 007593)	Clamp, Hose, 1.0	3
52	385011	(007000- 007593)	Fitting, E90	1
53	385013	(007000- 007593)	Hose, Mold [Epr To Mixer]	1
54	1041151	(007000- 007593)	Seal, Org, Sensor, Temp [Epr]	1
55	1041152	(007000- 007593)	Sensor, Temp [Epr	1
56	372492	(007000- 007593)	Sensor, Spd, Timing Wheel [3.0l]	1

Fig. 39 - Engine EFI Group, LPG (007593-)

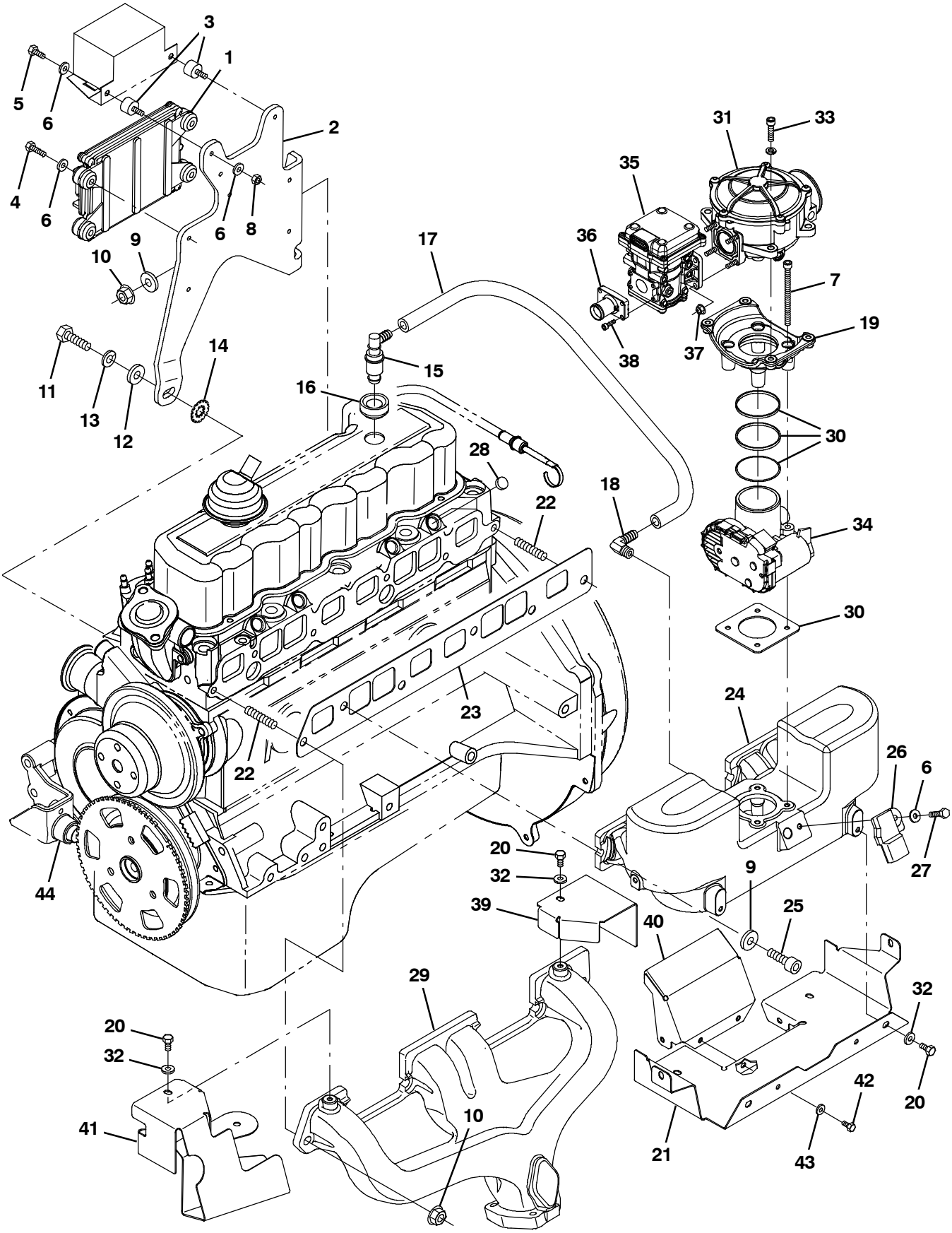

356227 - 800, LP

Fig. 39 - Engine EFI Group, LPG (007593-)

	Ref.	Part No.	Serial Number	Description	Qty.
	1	1062363	(007593-)	Module, Ecu, Lpg [Gm3.0L 2010]	1
	2	385008	(007593-)	Bracket, Box, Relay	1
	3	372470	(007593-)	Isolator, Box, Relay	2
	4	25047	(007593-)	Screw, Hex, .25- 20 X 1.25, G5	4
	5	19315	(007593-)	Screw, Hex, .25- 20 X 0.50, G5	2
	6	32490	(007593-)	Washer, Flat, 0.25, Std	9
	7	385016	(007593-)	Screw, Soc, M6 X 1.00 X 70	4
	8	19312	(007593-)	Nut, Hex, Std, .25- 20	2
	9	371877	(007593-)	Washer, Flat, 0.38, Hardened	5
	10	27980	(007593-)	Nut, Hex, Flng, .38- 16	3
	11	21197	(007593-)	Screw, Hex, .38- 16 X 1.00, G5	5
	12	371877	(007593-)	Washer, Flat, 0.38, Hardened	1
	13	371509	(007593-)	Washer, Lock, 0.38	5
	14	371875	(007593-)	Washer, Lock, Int / Ext, 0.38	1
	15	9006589	(007593-)	Valve [Pc]	1
	16	393984	(007593-)	Grommet	1
	17	385001	(007593-)	Hose, Fuel, .38d, Rbr[16”L]	1
	18	385002	(007593-)	Fitting, E90	1
	19	9008803	(007593-)	Adapter, Valve, 400mm [Bosch]	1
	20	87308	(007593-)	Screw, Hex, M6 X 1.00 X 12, 8.8	8
	21	9008799	(007593-)	Shield, Heat [Gm3.0l 2010]	1
	22	372466	(007593-)	Stud, .38- 16 X 1.2l	2
	23	385003	(007593-)	Gasket, Manifold, Intake	1
	24	9008194	(007593-)	Manifold, Intake [Gm3.0l 2010]	1
	25	10830	(007593-)	Screw, Soc, .38- 16 X 1.00, Al	4
	26	372493	(007593-)	Sensor [T Map]	1
	27	19317	(007593-)	Screw, Hex, .25- 20 X 0.75, G5	1
	28	372579	(007593-)	Plug, Hole, Injector	4
	29	1060653	(007593-)	Manifold, Exhaust [Gm3.0l]	1
	30	9003391	(007593-)	Gasket Kit, Repair, Lpg [Gm1.6l 2007]	1
▽	31	9006618	(007593-)	Mixer , Lpg	1
▲		9010634	(007593-)	Repair Kit, Mixer	1
	32	32483	(007593-)	Washer, Flat, 0.25, Sae	8
	33	385017	(007593-)	Screw, Soc, #12- 24 X 1.50	4
	34	384974	(007593-)	Housing, Throttle, 40mm [Bosch]	1
	35	9008806	(007593-)	Regulator, Press, Electronic [Epr]	1
	36	9008807	(007593-)	Fitting, Barb, 3/4” [Epr]	1
	37	9007423	(007593-)	Nut,Flng,M05- 0.8	4
	38	9008808	(007593-)	Screw, Soc, M4 X 0.70 X 16	4
	39	9008800	(007593-)	Shield, Heat [Gm3.0l 2010]	1
	40	9008801	(007593-)	Shield, Heat [Gm3.0l 2010]	1
	41	9008802	(007593-)	Shield, Heat, Alternator [Gm3.0l 10]	1
	42	763025	(007593-)	Screw, Hex, M5 X 0.80 X 10, Fl	4
	43	19065	(007593-)	Washer, Flat, 0.19b 0.44d .05, Pl, 08	4
	44	372492	(007593-)	Sensor, Spd, Timing Wheel [3.0l]	1

Fig. 40 - Engine Vaporizer Group, LPG (007593-)

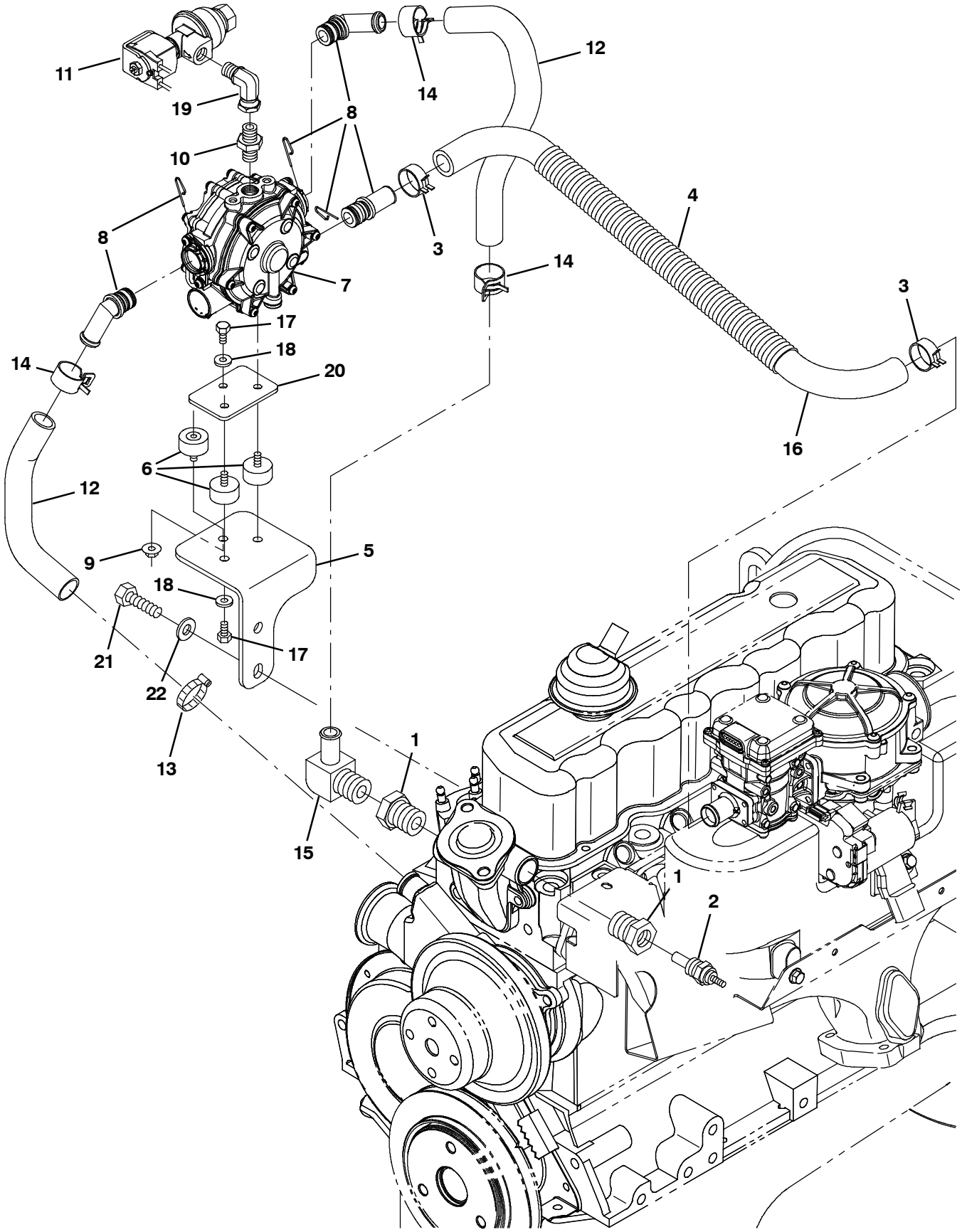

356228 - 800, LP

Fig. 40 - Engine Vaporizer Group, LPG (007593-)

	Ref.	Part No.	Serial Number	Description	Qty.
	1	385000	(007593-)	Fitting, Bshg	2
	2	372472	(007593-)	Sensor, Temp	1
	3	384979	(007593-)	Clamp, Hose, Spring, 0.62d	2
	4	384971	(007593-)	Cover, Hose	1
	5	9008809	(007593-)	Bracket, Mtg, Isolator [Gm3.0l 2010]	1
	6	9008805	(007593-)	Isolator	3
	7	9008193	(007593-)	Regulator	1
	8	384978	(007593-)	Fitting Kit [Epr]	1
	9	385015	(007593-)	Nut, Flng, M8	1
	10	372529	(007593-)	Fitting, Nipple, .25mal	1
▽	11	9006620	(007593-)	Valve, Lock Off	1
▲		9007380	(007593-)	Filter Kit, Fuelock,Lpg	1
	12	372528	(007593-)	Hose, Mold, .62 To .75	2
	13	63810	(007593-)	Clamp, Hose, Wormdrive, 0.56- 1.06d, .56w	1
	14	372539	(007593-)	Clamp, Hose, 1.0	3
	15	385011	(007593-)	Fitting, E90	1
	16	385013	(007593-)	Hose, Mold [Epr To Mixer]	1
	17	87308	(007593-)	Screw, Hex, M6 X 1.00 X 12, 8.8	3
	18	32483	(007593-)	Washer, Flat, 0.25, Sae	3
	19	11442- 1	(007593-)	Fitting, Hyd, E90, Spcl	1
	20	9008804	(007593-)	Plate, Mtg [Epr]	1
	21	21195	(007593-)	Screw, Hex, .38- 16 X 0.75, G5	2
	22	32485	(007593-)	Washer, Flat, 0.38, Sae	2

Fig. 41 - Engine Air Cleaner Group (004000-004936)

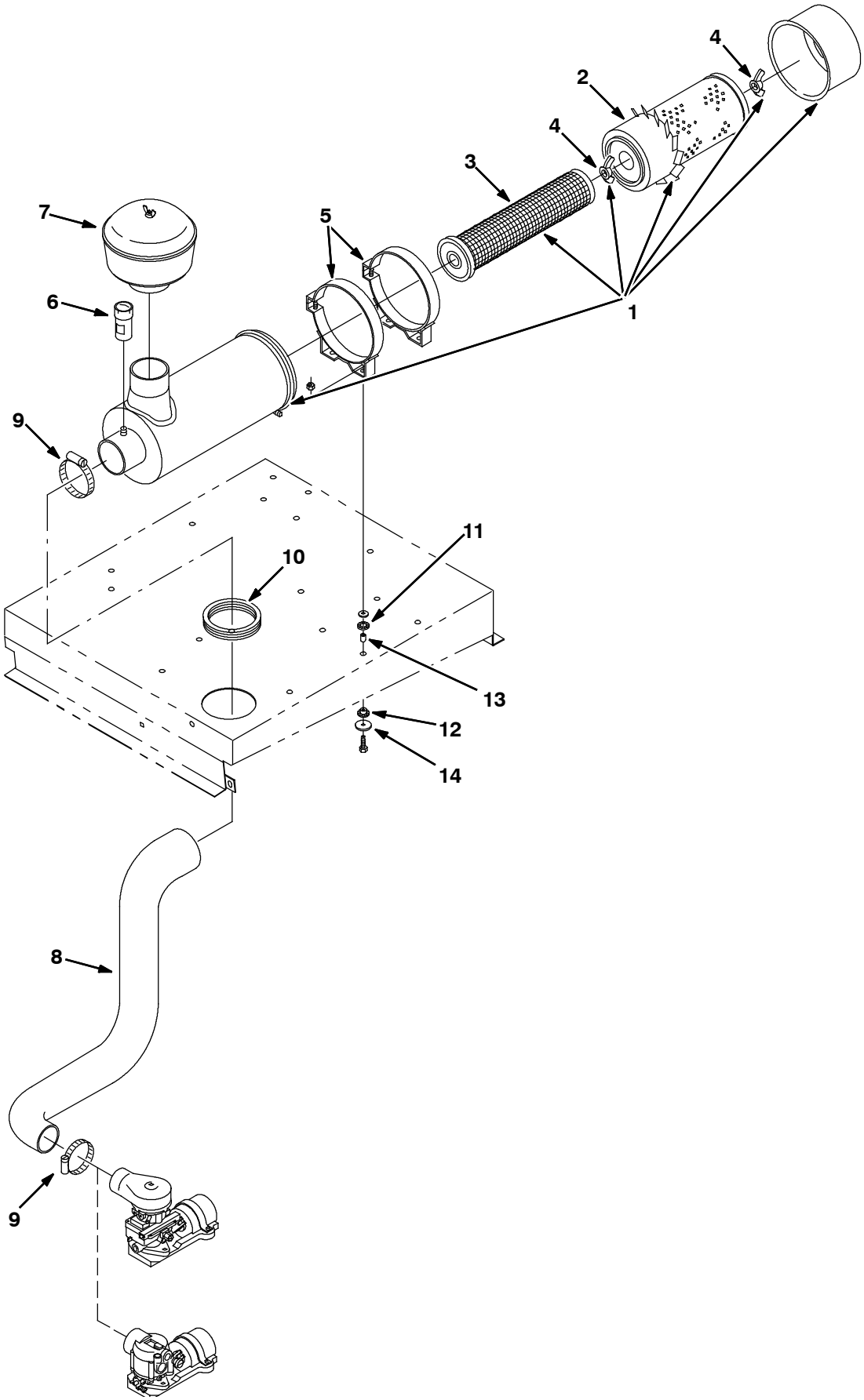

350700 - G, LP

Fig. 41 - Engine Air Cleaner Group (004000-004936)

	Ref.	Part No.	Serial Number	Description	Qty.
▽	1	48014	(004000-004936)	Cleaner, Air Al Se	1
▲	2	60934	(004000-004936)	Element, Air Cleaner	1
▲	3	60933	(004000-004936)	Element, Filter Safety	1
▲	4	07562	(004000-004936)	Nut,Wing .44-20 Special	2
	5	76321	(004000-004936)	Band,Mtg.	2
	6	03026	(004000-004936)	Indicator Service Air Filter	1
	7	75666	(004000-004936)	Filter, Pre-Cleaner, A/C	1
	8	380592	(004000-004936)	Hose, Molded	1
	9	43555	(004000-004936)	Clamp-Wormdrive, 1.62- 3.50D	2
	10	380591	(004000-004936)	Grommet, Rbr, 3.75Id F/ 4.0H .	1
	11	54527	(004000-004936)	Ring, Rubber	4
	12	54528	(004000-004936)	Bushing, Rubber	4
	13	45177	(004000-004936)	Sleeve	4
	14	41178	(004000-004936)	Washer, Fender	4

Fig. 42 - Engine Air Cleaner Group (004937-005999)

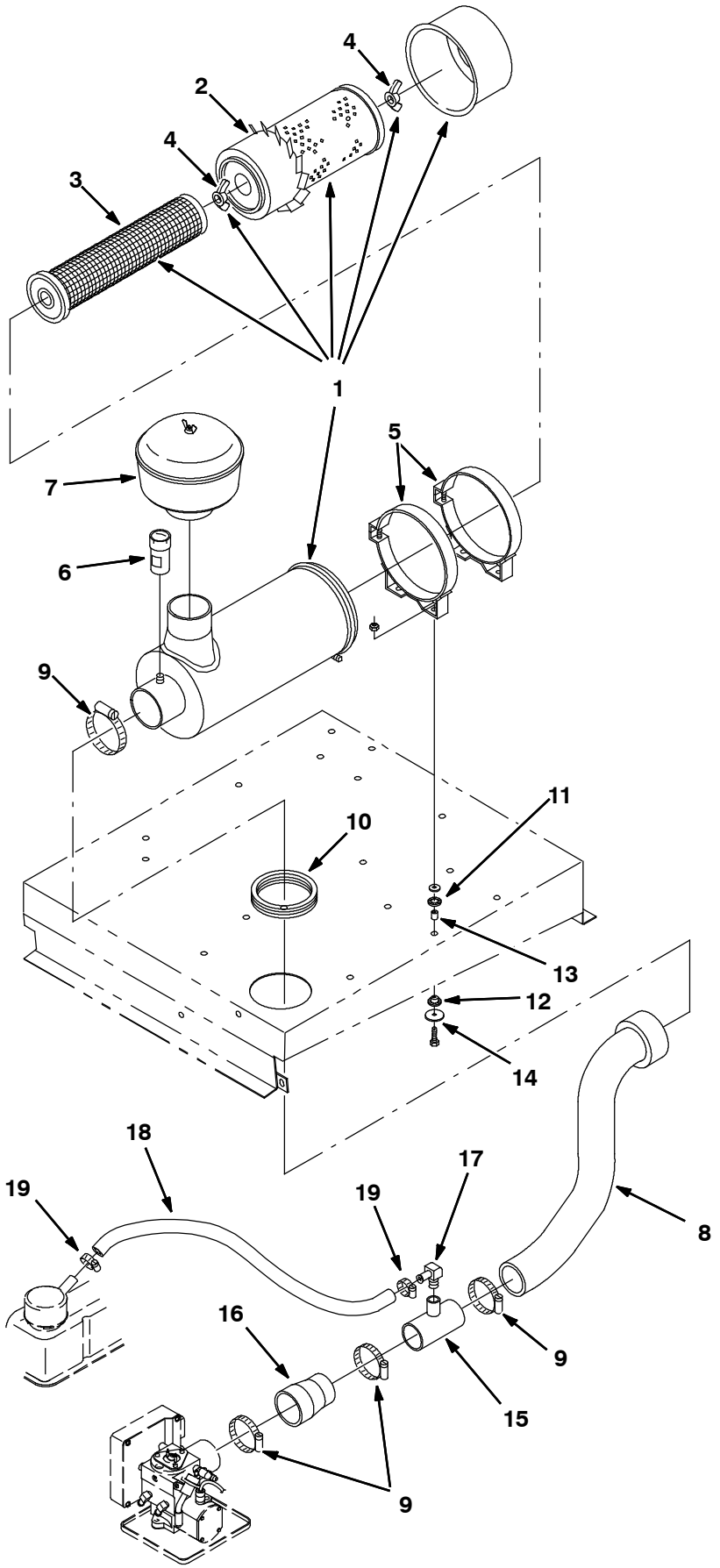

353868 - G, LP

Fig. 42 - Engine Air Cleaner Group (004937-005999)

	Ref.	Part No.	Serial Number	Description	Qty.
▽	1	48014	(004937-005999)	Cleaner, Air Al Se	1
▲	2	60934	(004937-005999)	Element, Air Cleaner	1
▲	3	60933	(004937-005999)	Element, Filter Safety	1
▲	4	07562	(004937-005999)	Nut,Wing .44-20 Special	2
	5	76321	(004937-005999)	Band,Mtg.	2
	6	03026	(004937-005999)	Indicator Service Air Filter	1
	7	75666	(004937-005999)	Filter, Pre-Cleaner, A/C	1
	8	393208	(004937-005999)	Hose, Molded	1
	9	43555	(004937-005999)	Clamp-Wormdrive, 1.62- 3.50D	4
	10	380591	(004937-005999)	Grommet, Rbr, 3.75Id F/ 4.0H .	1
	11	54527	(004937-005999)	Ring, Rubber	4
	12	54528	(004937-005999)	Bushing, Rubber	4
	13	45177	(004937-005999)	Sleeve	4
	14	41178	(004937-005999)	Washer, Fender	4
	15	393207	(004937-005999)	Tube Wldt, Intake, 2.0d .38npt	1
	16	393205	(004937-005999)	Tube, Intake, 2.0d 04.0l	1
	17	51839	(004937-005999)	Fitting, Brs, E90, Em10/Pm06	1
	18	72978	(004937-005999)	Hose, Heater, 0.62id 13.0l	1
	19	63810	(004937-005999)	Clamp, Hose, Wormdrive, 0.56-1.06d	2

Fig. 43 - Engine Air Cleaner Group, Gas (006000-006999)

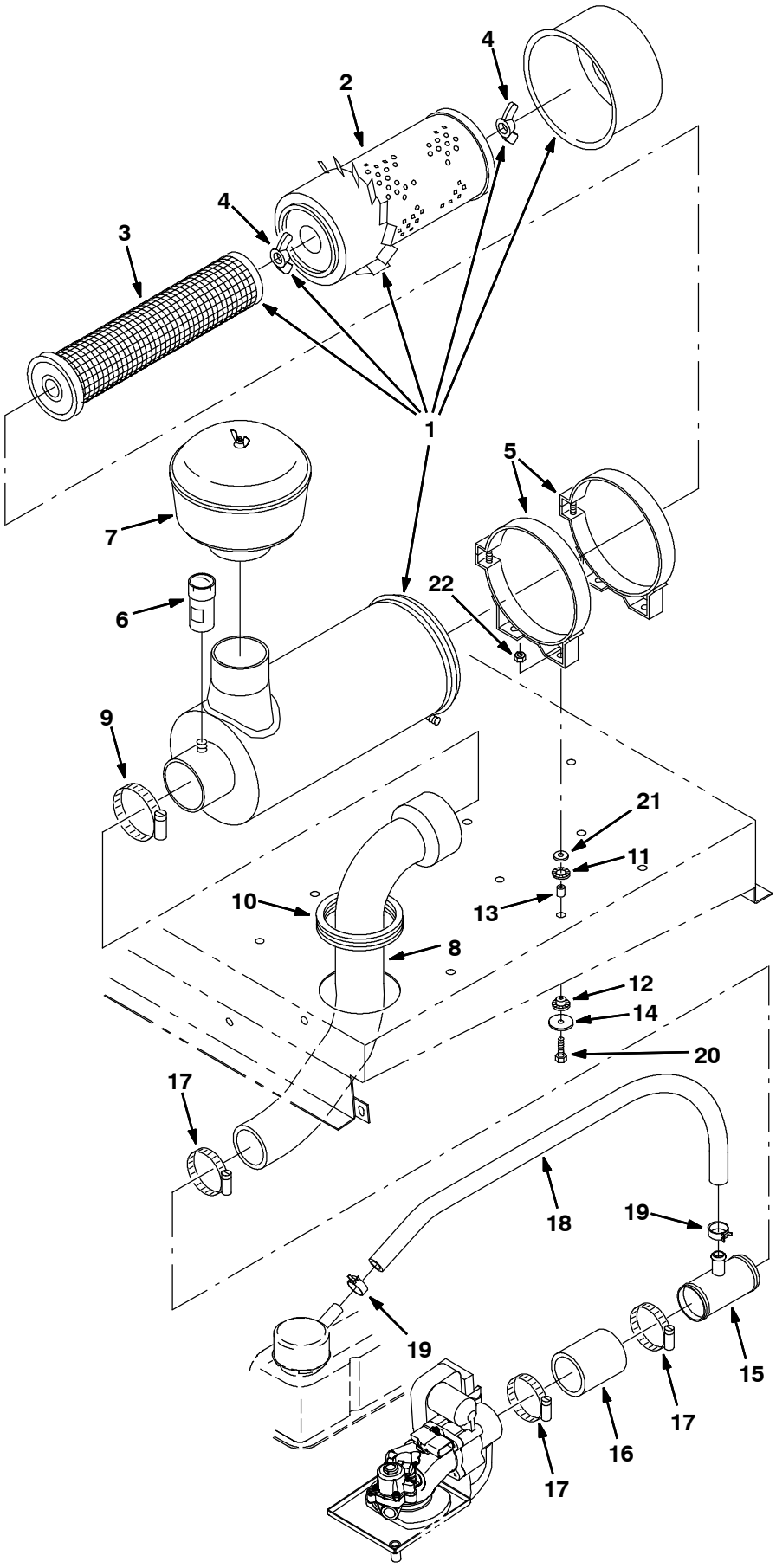

354176 - G

Fig. 43 - Engine Air Cleaner Group, Gas (006000-006999)

	Ref.	Part No.	Serial Number	Description	Qty.
▽	1	48014	(006000-006999)	Cleaner, Air Al Se	1
▲	2	60934	(006000-006999)	Element, Air Cleaner	1
▲	3	60933	(006000-006999)	Element, Filter Safety	1
▲	4	07562	(006000-006999)	Nut,Wing .44-20 Special	2
	5	76321	(006000-006999)	Band,Mtg.	2
	6	03026	(006000-006999)	Indicator Service Air Filter	1
	7	75666	(006000-006999)	Filter, Pre-Cleaner, A/C	1
	8	393208	(006000-006999)	Hose, Molded	1
	9	43555	(006000-006999)	Clamp-Wormdrive, 1.62- 3.50D	1
	10	380591	(006000-006999)	Grommet, Rbr, 3.75Id F/ 4.0H .	1
	11	54527	(006000-006999)	Ring, Rubber	4
	12	54528	(006000-006999)	Bushing, Rubber	4
	13	45177	(006000-006999)	Sleeve	4
	14	41178	(006000-006999)	Washer, Fender	4
	15	1011780	(006000-006999)	Tube Wldt, Tee	1
	16	15543	(006000-006999)	Hose, Rbr, 2.00id 2.50od 03.0l	1
	17	83584	(006000-006999)	Clamp, Hose, Wormdrive, 1.31-3.25d	1
	18	13124	(006000-006999)	Hose, Heater, 0.62id 18.0l	1
	19	1011899	(006000-006999)	Clamp, Hose, Spring Stl, 0.86d X 0.38w	2
	20	06944	(006000-006999)	Screw, Hex, M6 X 1.0 X 25, 8.8	1
	21	32490	(006000-006999)	Washer, Flat, 0.25 Std	1
	22	08708	(006000-006999)	Nut, Hex, Lock, M6 X 1.0, Nl	1

Fig. 44 - Engine Air Cleaner Group, Gas (007000-)

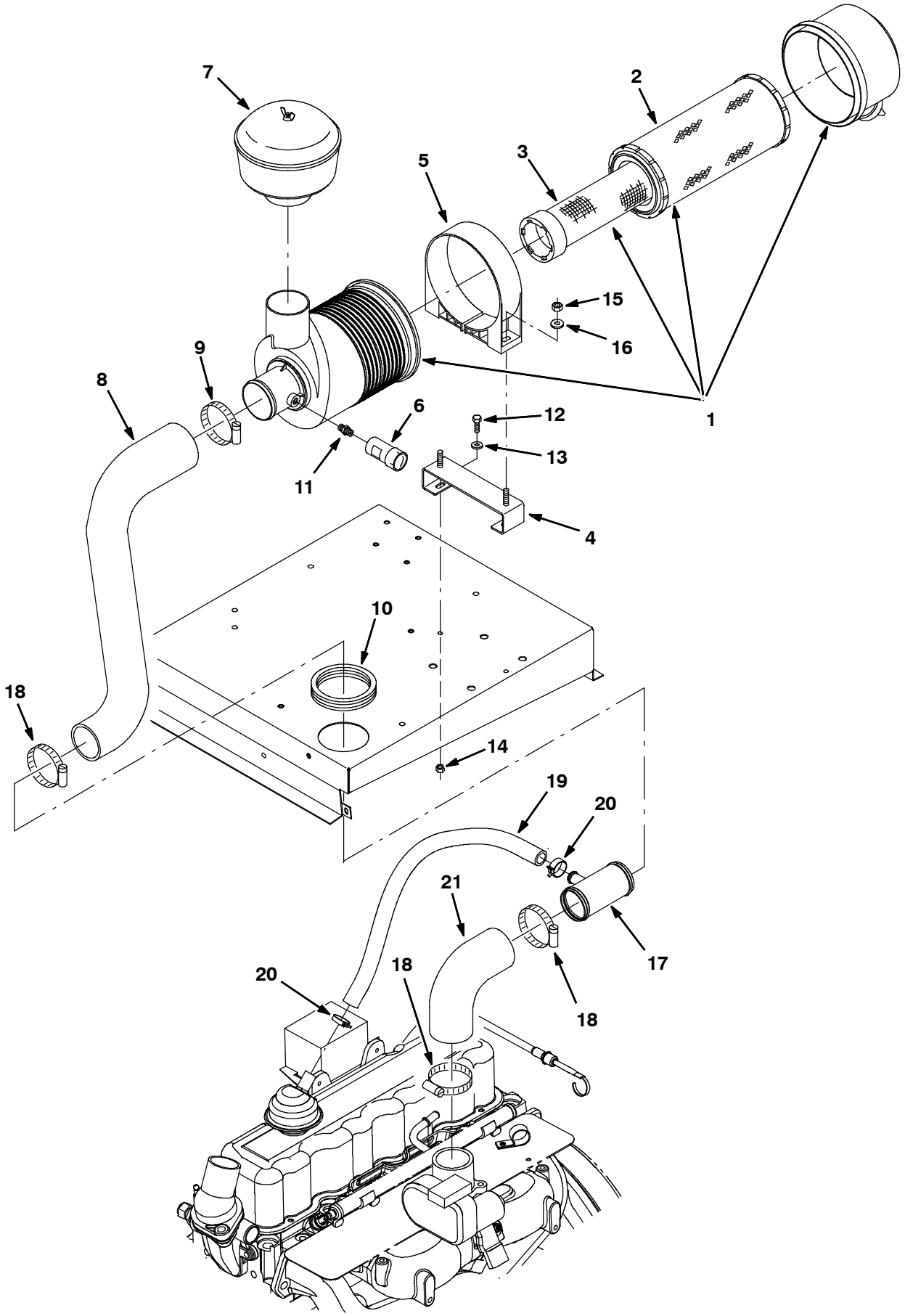

354176 - G

Fig. 44 - Engine Air Cleaner Group, Gas (007000-)

	Ref.	Part No.	Serial Number	Description	Qty.
▽	1	1013344	(007000-)	Filter Assy, Air, 3.0 Inlet	1
▲	2	372652	(007000-)	Element, Fltr, Air [Dn]	1
▲	3	372651	(007000-)	Element, Fltr, Air	1
	4	1012754	(007000- 008088)	Bracket, Stand- Off, Fltr, Air	1
	4	1073802	(008089-)	Bracket, Stand- Off, Fltr, Air [800 B/Gr]	1
	5	1013366	(007000-)	Strap, Mtg, Fltr, Air, 7.17id	1
	6	03026	(007000-)	Indicator, Service, Fltr, Air [20h20 Dn]	1
	7	75666	(007000-)	Filter, Air, Pre- Cln, A/C	1
	8	393208	(007000-)	Hose, Intake, Mold, Rwk 380592	1
	9	1067656	(007000-)	Clamp, Hose, Wormdrive, 3.25- 4.00d, .50w	1
	10	380591	(007000-)	Grommet, Rbr, 3.25id, F/3.5h, .06 Matl	1
	11	51560- 5	(007000-)	Fitting, Brs, Str, Pm02, Service	1
	12	06949	(007000-)	Screw, Hex, M6 X 1.0 X 50, 8.8	2
	13	19066	(007000-)	Washer, Flat, #10	2
	14	07791	(007000-)	Nut, Hex, Flng, M8 X 1.25	2
	15	08709	(007000-)	Nut, Hex, Lock, M8 X 1.25, Nl	2
	16	32491	(007000-)	Washer, Flat, 0.31, Std	2
	17	1011780	(007000-)	Tube Wldt, Tee	1
	18	83584	(007000-)	Clamp, Hose, Wormdrive, 2.25- 3.25d, .50w	3
	19	393373	(007000-)	Hose, Heater, 0.62id, 024.0l	1
	20	1011899	(007000-)	Clamp, Hose, Spring Stl, 0.86d X 0.38w	2
	21	76825	(007000-)	Hose, Rbr, E90, 2.00id 2.00id 03.5 03.5	1

Fig. 45 - Engine Air Cleaner Group, LPG (006000-006999)

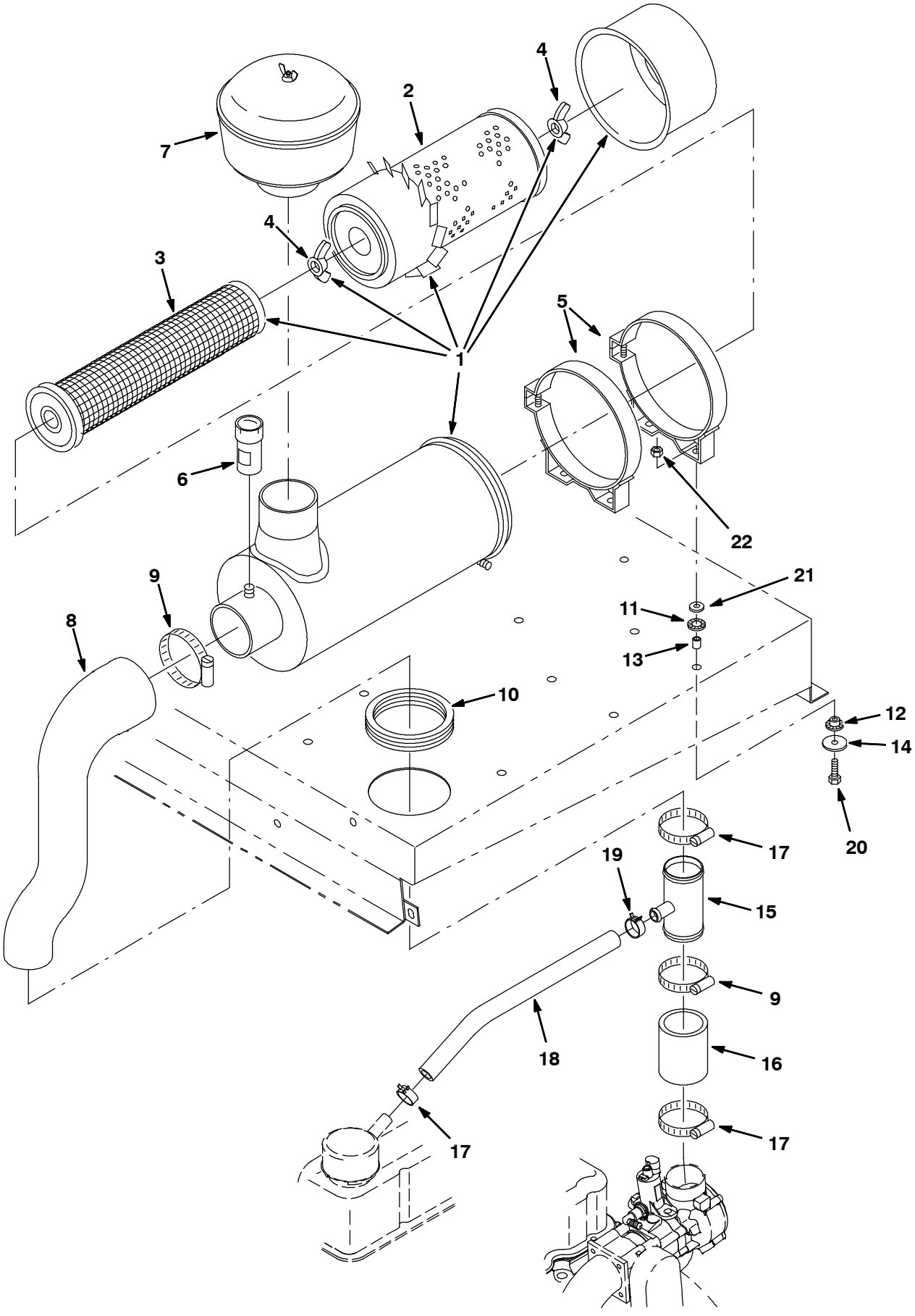

353868 - LP

Fig. 45 - Engine Air Cleaner Group, LPG (006000-006999)

	Ref.	Part No.	Serial Number	Description	Qty.
▽	1	48014	(006000-006999)	Cleaner, Air Al Se	1
▲	2	60934	(006000-006999)	Element, Air Cleaner	1
▲	3	60933	(006000-006999)	Element, Filter Safety	1
▲	4	07562	(006000-006999)	Nut,Wing .44-20 Special	2
	5	76321	(006000-006999)	Band,Mtg.	2
	6	03026	(006000-006999)	Indicator Service Air Filter	1
	7	75666	(006000-006999)	Filter, Pre-Cleaner, A/C	1
	8	1011702	(006000-006999)	Hose, Molded	1
	9	43555	(006000-006999)	Clamp-Wormdrive, 1.62- 3.50D	1
	10	380591	(006000-006999)	Grommet, Rbr, 3.75Id F/ 4.0H .	1
	11	54527	(006000-006999)	Ring, Rubber	4
	12	54528	(006000-006999)	Bushing, Rubber	4
	13	45177	(006000-006999)	Sleeve	4
	14	41178	(006000-006999)	Washer, Fender	4
	15	1011780	(006000-006999)	Tube Wldt, Tee	1
	16	15543	(006000-006999)	Hose, Rbr, 2.00id 2.50od 03.0l	1
	17	83584	(006000-006999)	Clamp, Hose, Wormdrive, 1.31-3.25d, .50w	3
	18	393373	(006000-006999)	Hose, Heater, 0.62id 24.0l	1
	19	1011899	(006000-006999)	Clamp, Hose, Spring Stl, 0.86d X 0.38w	2
	20	06944	(006000-006999)	Screw, Hex, M6 X 1.0 X 25, 8.8	1
	21	32490	(006000-006999)	Washer, Flat, 0.25 Std	1
	22	08708	(006000-006999)	Nut, Hex, Lock, M6 X 1.0, Nl	1

Fig. 46 - Engine Air Cleaner Group, LPG (007000-)

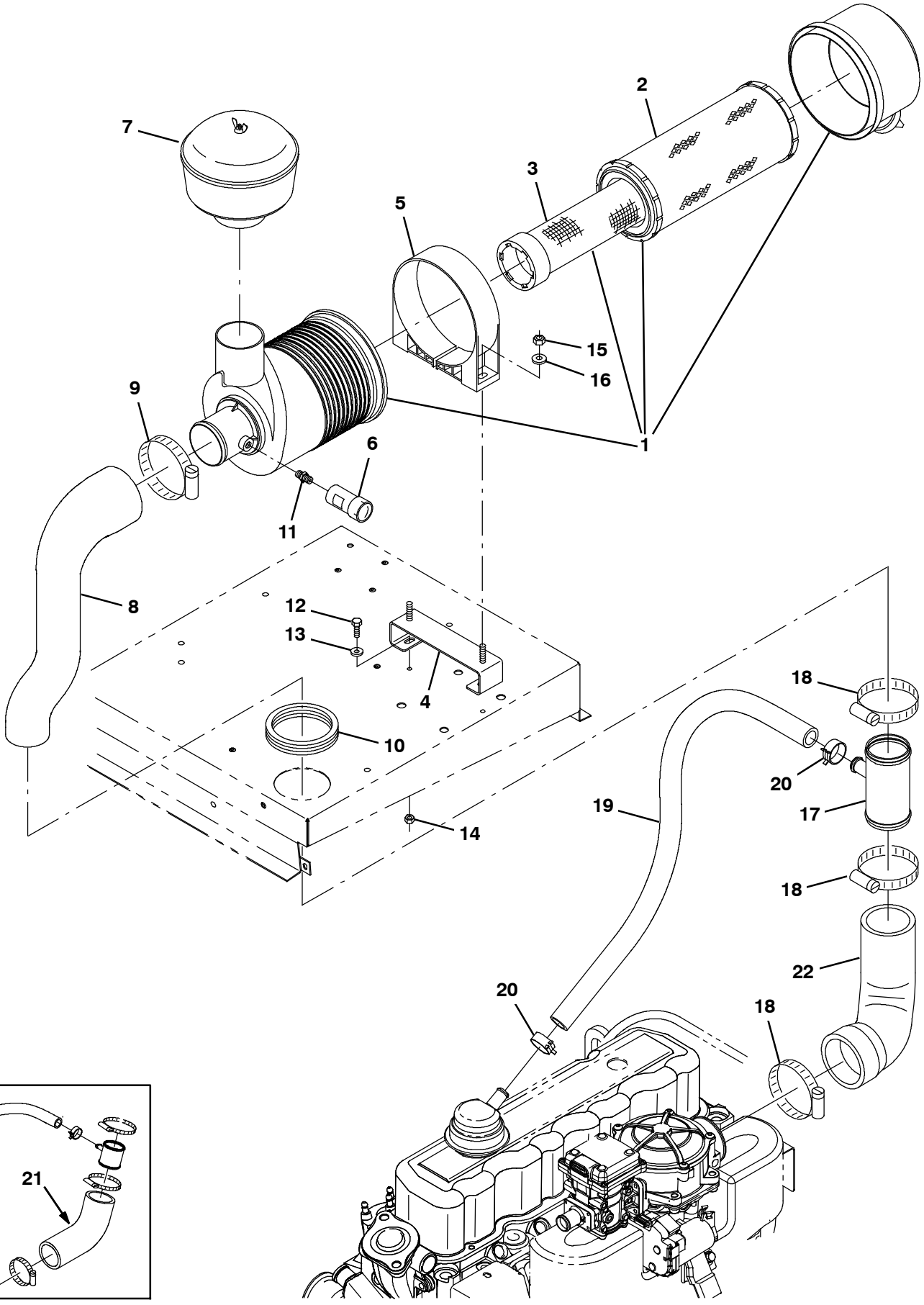

353868 - LP

Fig. 46 - Engine Air Cleaner Group, LPG (007000-)

	Ref.	Part No.	Serial Number	Description	Qty.
▽	1	1013344	(007000-)	Filter Assy, Air, 3.0 Inlet	1
▲	2	372652	(007000-)	Element, Fltr, Air [Dn]	1
▲	3	372651	(007000-)	Element, Fltr, Air	1
	4	1012754	(007000- 008088)	Bracket, Stand- Off, Fltr, Air	1
	4	1073802	(008089-)	Bracket, Stand- Off, Fltr, Air [800 B/Gr]	1
	5	1013366	(007000-)	Strap, Mtg, Fltr, Air, 7.17id	1
	6	03026	(007000-)	Indicator, Service, Fltr, Air [20h20 Dn]	1
	7	75666	(007000-)	Filter, Air, Pre- Cln, A/C	1
	8	1011702	(007000-)	Hose, Intake, Mold, 3.00id 2.00id [Epdm]	1
	9	1067656	(007000-)	Clamp, Hose, Wormdrive, 3.25- 4.00d, .50w	1
	10	380591	(007000-)	Grommet, Rbr, 3.25id, F/3.5h, .06 Matl	1
	11	51560- 5	(007000-)	Fitting, Brs, Str, Pm02, Service	1
	12	06949	(007000-)	Screw, Hex, M6 X 1.0 X 50, 8.8	2
	13	19066	(007000-)	Washer, Flat, #10	2
	14	07791	(007000-)	Nut, Hex, Flng, M8 X 1.25	2
	15	08709	(007000-)	Nut, Hex, Lock, M8 X 1.25, Nl	2
	16	32491	(007000-)	Washer, Flat, 0.31, Std	2
	17	1011780	(007000-)	Tube Wldt, Tee	1
	18	83584	(007000-)	Clamp, Hose, Wormdrive, 2.25- 3.25d, .50w	3
	19	393373	(007000-)	Hose, Heater, 0.62id, 024.0l	1
	20	1011899	(007000-)	Clamp, Hose, Spring Stl, 0.86d X 0.38w	2
	21	1032032	(007000- 007486)	Hose, Intake, Mold, 2.00id [Epdm]	1
	22	1062545	(007487-)	Hose, Intake, Mold, 2.0id X 2.26id[Epdm]	1

Fig. 47 - Engine Muffler Group (004000-004936)

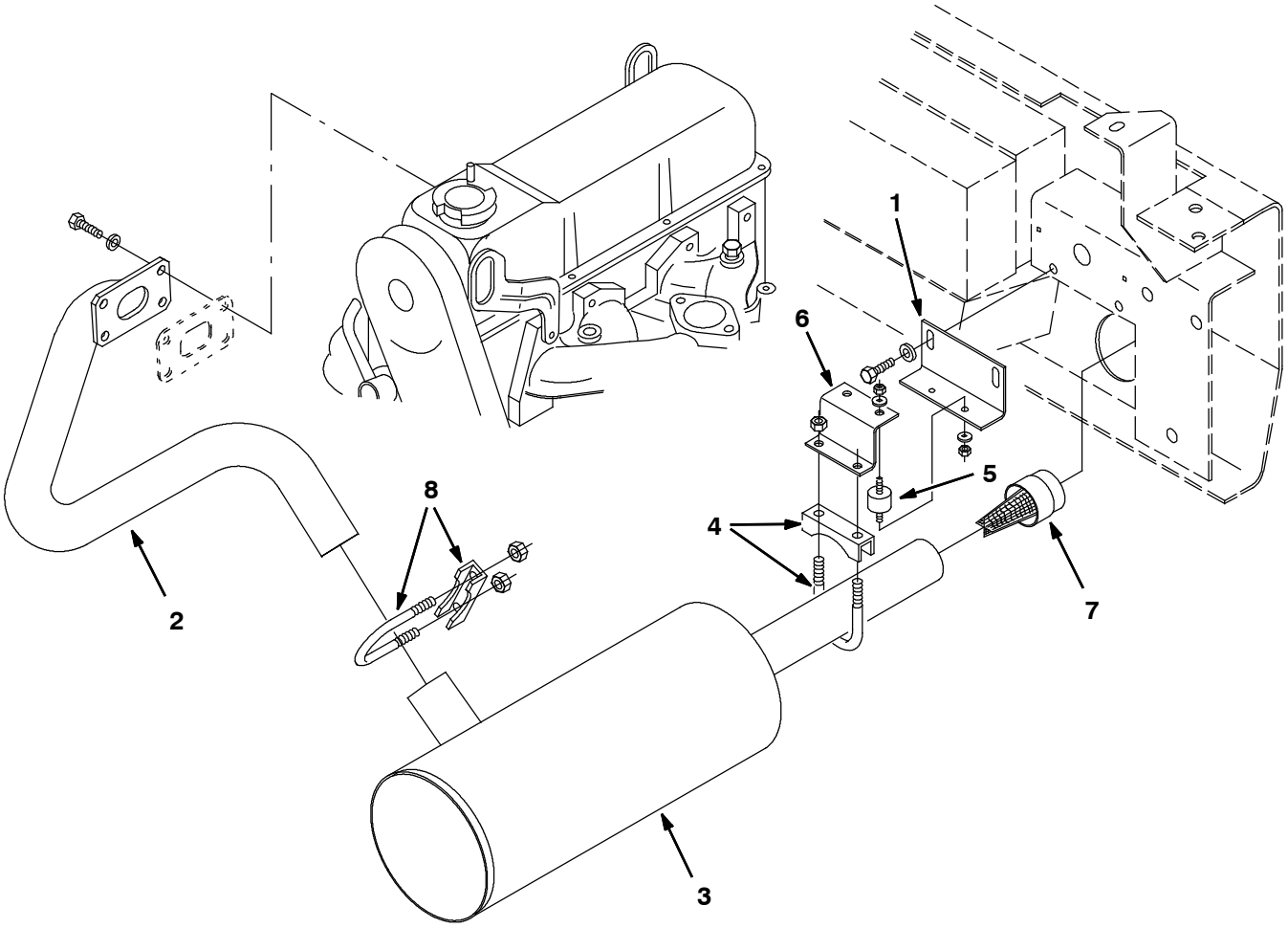

07721 - G, LP, NA

Fig. 47 - Engine Muffler Group (004000-004936)

Ref.	Part No.	Serial Number	Description	Qty.
1	21138	(004000-004936)	Bracket, Tail Pipe	1
2	70631	(004000-004936)	Pipe Wldt, Exhaust, Gas/Lpg	1
3	76383	(004000-004936)	Muffler, Exhaust	1
4	05881	(004000-004936)	Clamp-Muffler,For 2.00 Od Tube	1
5	82661	(004000-004936)	Isolator-Vibration .25-20	2
6	21136	(004000-004936)	Bracket, Tail Pipe	1
7	70832	(004000-004936)	Screen, Muffler	1
8	05880	(004000-004936)	Clamp-Muffler,For 1.87 Od Tube	1

Fig. 48 - Engine Muffler Group, Catalytic (004937-005999)

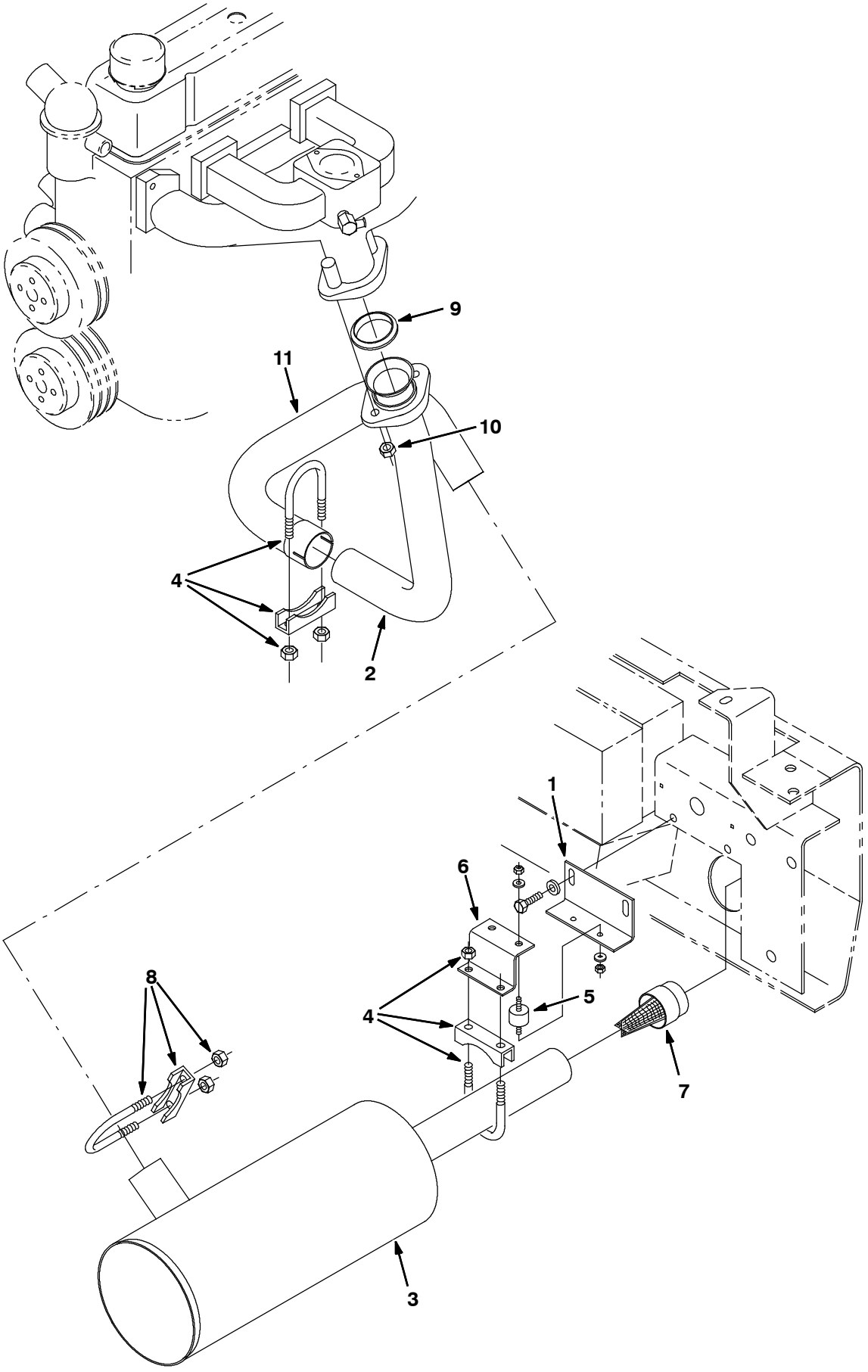

353873 - G, LP, NA

Fig. 48 - Engine Muffler Group, Catalytic (004937-005999)

Ref.	Part No.	Serial Number	Description	Qty.
1	21138	(004937-005999)	Bracket, Tail Pipe	1
2	393253	(004937-005999)	Tube, Exhaust, 2.0d [Gm3.0] [800/810]	1
3	76383	(004937-005999)	Muffler, Exhaust	1
4	05881	(004937-005999)	Clamp-Muffler,For 2.00 Od Tube	2
5	82661	(004937-005999)	Isolator-Vibration .25-20	2
6	21136	(004937-005999)	Bracket, Tail Pipe	1
7	70832	(004937-005999)	Screen, Muffler	1
8	05880	(004937-005999)	Clamp-Muffler,For 1.87 Od Tube	1
9	371573	(004937-005999)	Gasket	1
10	25014	(004937-005999)	Nut, Hex, Std, .38-16	2
11	393252	(004937-005999)	Tube, Exhaust, 2.0d [Gm3.0] [800/810]	1

Fig. 49 - Engine Muffler Group, Catalytic (006000-006999)

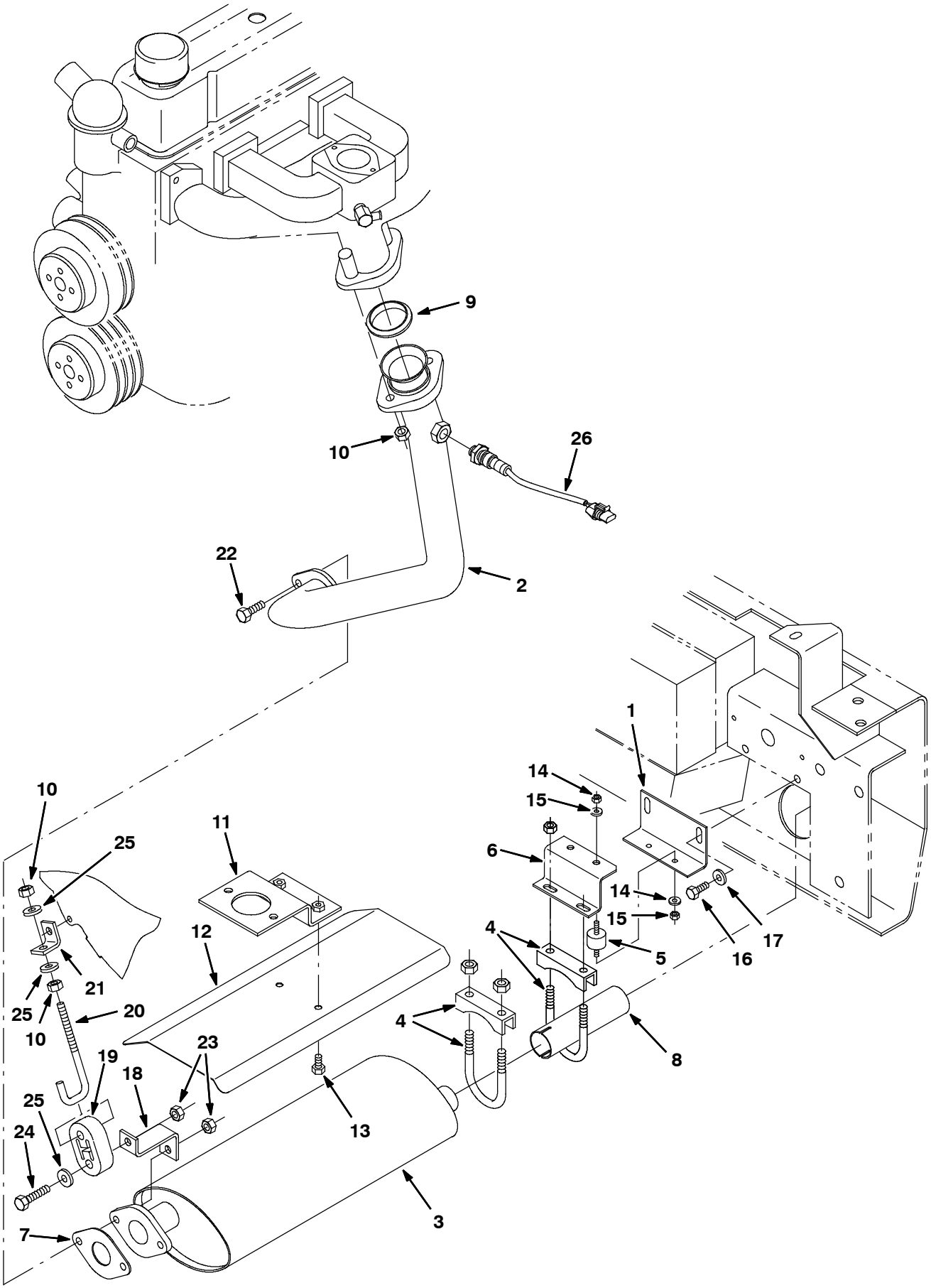

353873 - G, LP, NA

Fig. 49 - Engine Muffler Group, Catalytic (006000-006999)

Ref.	Part No.	Serial Number	Description	Qty.
1	21138	(006000-006999)	Bracket, Tail Pipe	1
2	1011944	(006000-006999)	Tube, Exhaust, 2.0d [Gm3.0] [800/810]	1
3	1011259	(006000-006999)	Muffler, Catalytic [Gm 1.6/3.0]	1
4	24012	(006000-006999)	Clamp, Muffler, 1.62d	2
5	1013588	(006000-006999)	Isolator, Vib, Ring, 1.0d .25-20/.25-20	2
6	1012012	(006000-006999)	Bracket, Tailpipe	1
7	1011216	(006000-006999)	Gasket, Exhaust, 2 Hole, 3.4bc	1
8	1011959	(006000-006999)	Tube, Exhaust, Rear	1
9	371573	(006000-006999)	Gasket	1
10	25014	(006000-006999)	Nut, Hex, Std, .38-16	4
11	1012990	(006000-006999)	Bracket, Mtg, Heat Shield	1
12	1012999	(006000-006999)	Shield, Heat	1
13	16735	(006000-006999)	Screw, Hex, M8 X 1.25 X 16, 8.8	2
14	19312	(006000-006999)	Nut, Hex, Std, .25-20	4
15	32982	(006000-006999)	Washer, Lock, Int, 0.25	4
16	16931	(006000-006999)	Screw, Hex, M8 X 1.25 X 20, 8.8	2
17	32491	(006000-006999)	Washer, Flat, 0.31 Std	2
18	1013116	(006000-006999)	Bracket, Isolator	1
19	1013031	(006000-006999)	Isolator, Rubber	1
20	1013117	(006000-006999)	Rod, Hanger, Isolator	1
21	1013113	(006000-006999)	Bracket, Mtg, Isolator	1
22	03192	(006000-006999)	Screw, Hex, M10 X 1.5 X 30, 8.8	2
23	08166	(006000-006999)	Nut, Hex, Stover, M10 X 1.5	3
24	06962	(006000-006999)	Screw, Hex, M10 X 1.5 X 45, 8.8	1
25	32492	(006000-006999)	Washer, Flat, 0.38 Std	3
26	372491	(006000-006999)	Sensor, Oxygen	1

Fig. 50 - Engine Muffler Group, Catalytic (007000-)

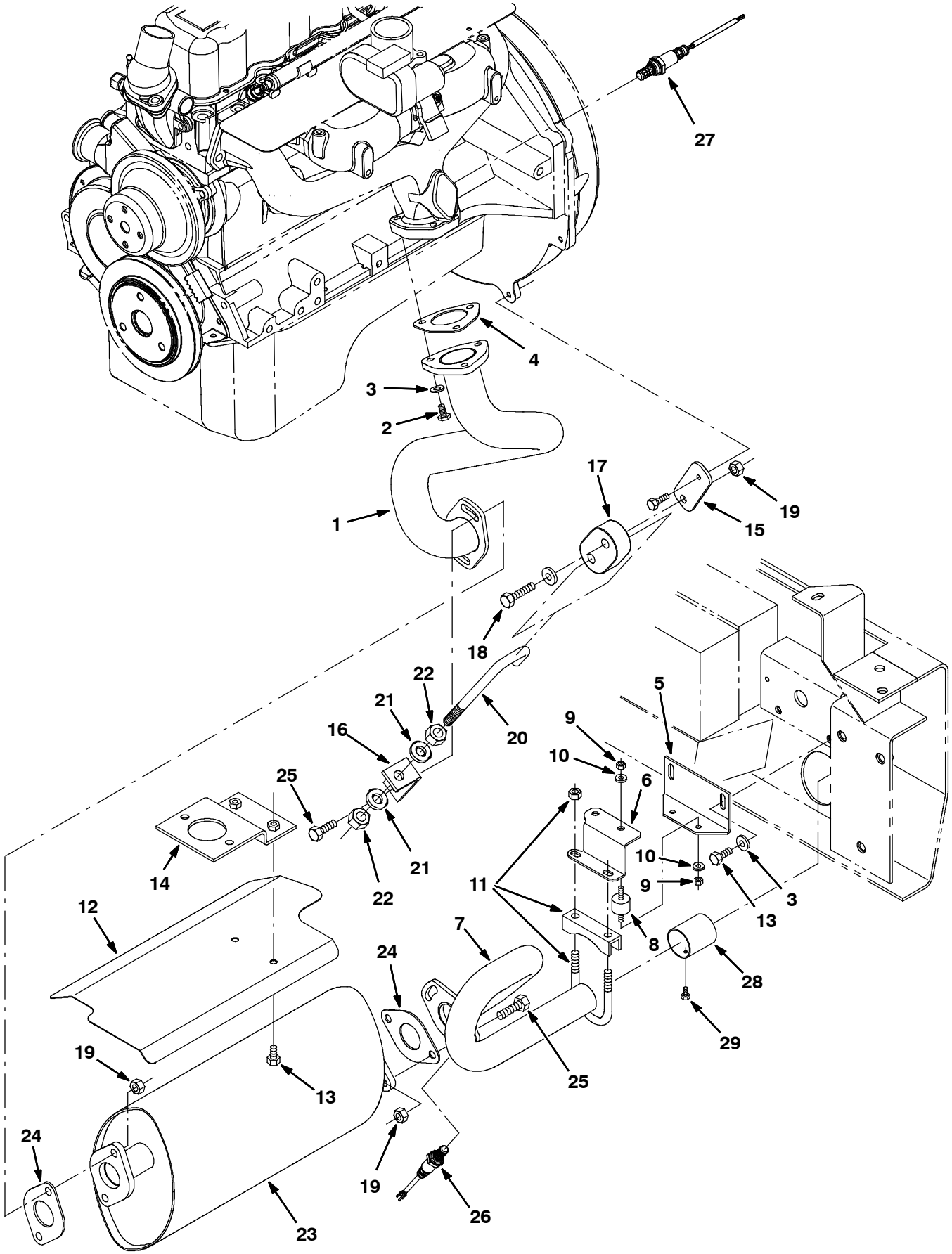

353873 - G, LP, NA

Fig. 50 - Engine Muffler Group, Catalytic (007000-)

Ref.	Part No.	Serial Number	Description	Qty.
1	1032083	(007000-)	Tube, Exhaust, Lower, [800/810, 2007]	1
2	76570	(007000-)	Screw, Hex, M8 X 1.25 X 30, 8.8	3
3	32491	(007000-)	Washer, Flat, 0.31, Std	5
4	1060286	(007000-)	Gasket, Flng, Exhaust [Gm3.0l]	1
5	1030502	(007000-)	Bracket, Tailpipe [800/810 2007]	1
6	1030501	(007000-)	Bracket, Tailpipe [800/810 2007]	1
7	1029996	(007000-)	Tube, Exhaust, Rear [Gm3.0l 800/810 07]	1
8	82661	(007000-)	Isolator, Vib, Ring, 1.0d .25- 20/.25- 20	2
9	19312	(007000-)	Nut, Hex, Std, .25- 20	4
10	32982	(007000-)	Washer, Lock, Int, 0.25	4
11	24012	(007000-)	Clamp, Muffler, 1.62d	1
12	1028836	(007000-)	Shield, Heat	1
13	16931	(007000-)	Screw, Hex, M8 X 1.25 X 20, 8.8	4
14	1028835	(007000-)	Bracket, Mtg, Heat Shield	1
15	1030122	(007000-)	Link, 0.18, 1.5w 03.6l, 1/0.4h 1/0.3h	1
16	1030134	(007000-)	Bracket, Mtg, Isolator [800/810 07]	1
17	1013031	(007000-)	Isolator, Rbr	1
18	06962	(007000-)	Screw, Hex, M10 X 1.5 X 45, 8.8	1
19	08166	(007000-)	Nut, Hex, M10 X 1.50 [Stover]	5
20	1032142	(007000-)	Rod, Hanger, Isolator	1
21	32492	(007000-)	Washer, Flat, 0.38, Std	2
22	25014	(007000-)	Nut, Hex, Std, .38- 16	2
23	1030533	(007000- 007486)	Muffler, Catalytic [Gm 3.0l 2007]	1
23	1062668	(007487-)	Muffler, Catalytic [Gm 3.0l 2010]	1
24	1011216	(007000-)	Gasket, Exhaust, 2hole, 3.4bc	2
25	39284	(007000-)	Screw, Hex, M10 X 1.5 X 35, 8.8	4
26	1028558	(007000-)	Sensor, Exhaust, Tailpipe	1
27	1028559	(007000- 007486)	Sensor, Oxygen [Gm 1.6l/3.0l 2007]	1
27	1028558	(007487-)	Sensor, Oxygen [Gm 1.6l/3.0l 2007]	1
28	1038293	(007000-)	Tube, Tailpipe	1
29	01706	(007000-)	Screw, Hex, #08- 32 X 0.38, Tcut	1

Fig. 51 - Engine Fuel Tank Group, Gas (004000-004936)

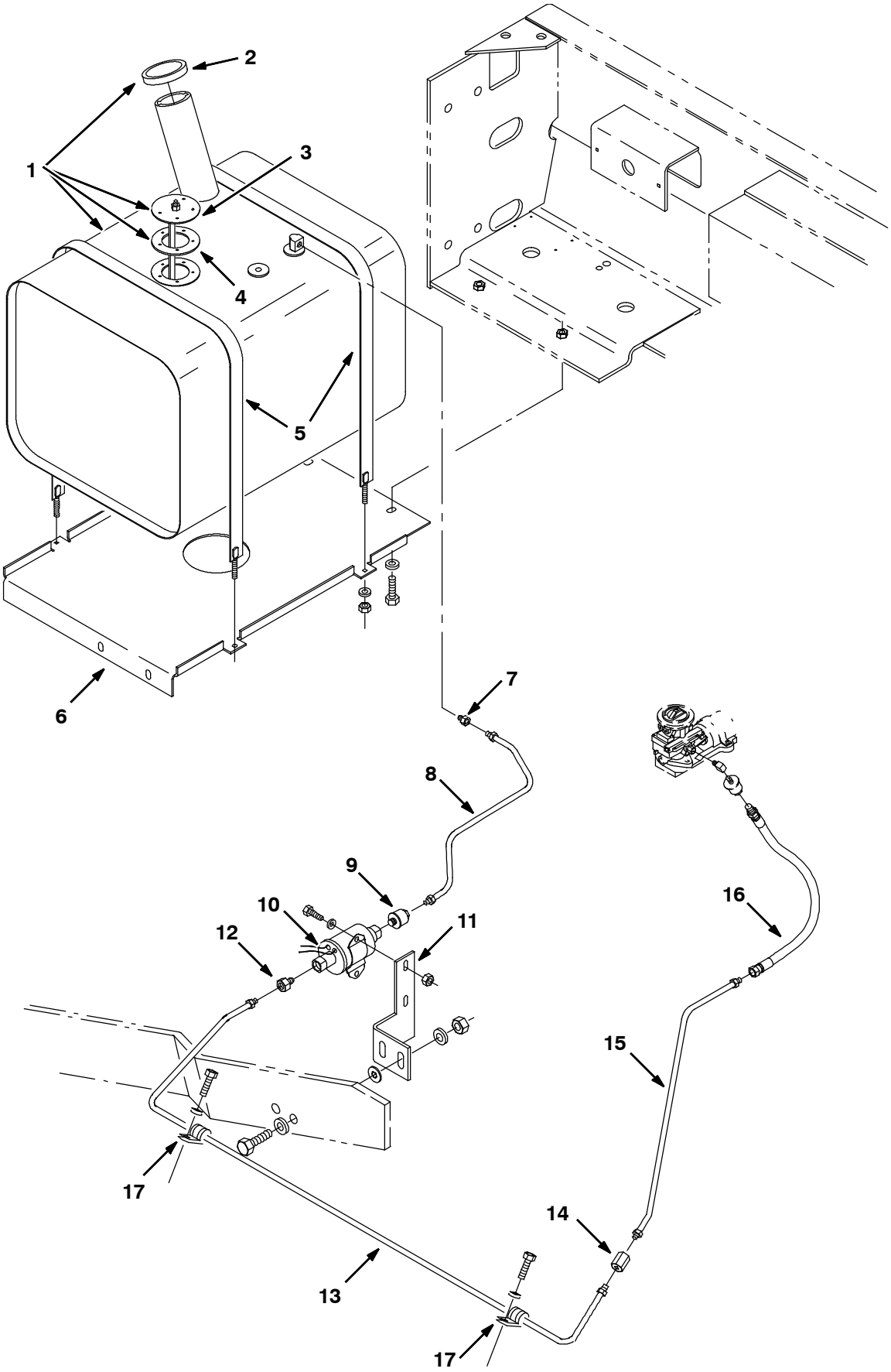

10622 - G

Fig. 51 - Engine Fuel Tank Group, Gas (004000- 004936)

	Ref.	Part No.	Serial Number	Description	Qty.
▽	1	76907	(004000- 004936)	Tank, Fuel	1
▲	2	48267	(004000- 004936)	Cap, Fuel	1
▲	3	21731	(004000- 004936)	Send Unit	1
▲	4	21732	(004000- 004936)	Gasket, 2.7D 1.5B.12T 5/ 2.1Bc	1
	5	87396	(004000- 004936)	Strap Weldmt, Gas Tank	2
	6	70477	(004000- 004936)	Plate, Mounting, Tank, Gas	1
	7	78043	(004000- 004936)	Fitting- Brs Str	1
	8	77558	(004000- 004936)	Fuelline, .312 Od	1
	9	36050	(004000- 004936)	Filter, Fuel	1
	10	59015	(004000- 004936)	Pump, Fuel	1
	11	75854	(004000- 004936)	Bracket, Pump, Fuel	1
	12	40585	(004000- 004936)	Ftg- Brs Str lf05/Pm02	1
	13	83644	(004000- 004936)	Fuelline, .312 Od	1
	14	25610	(004000- 004936)	Ftg- Brs lf05/lf05	1
	15	83643	(004000- 004936)	Tube Assy, Fuel .31Od	1
	16	70173	(004000- 004936)	Hose, Fuelline, 10.0L	1
	17	76736	(004000- 004936)	Clamp- Cable, 0.38Dia 0.62Wth	2

Fig. 52 - Engine Fuel Tank Group, Gas (004937-005999)

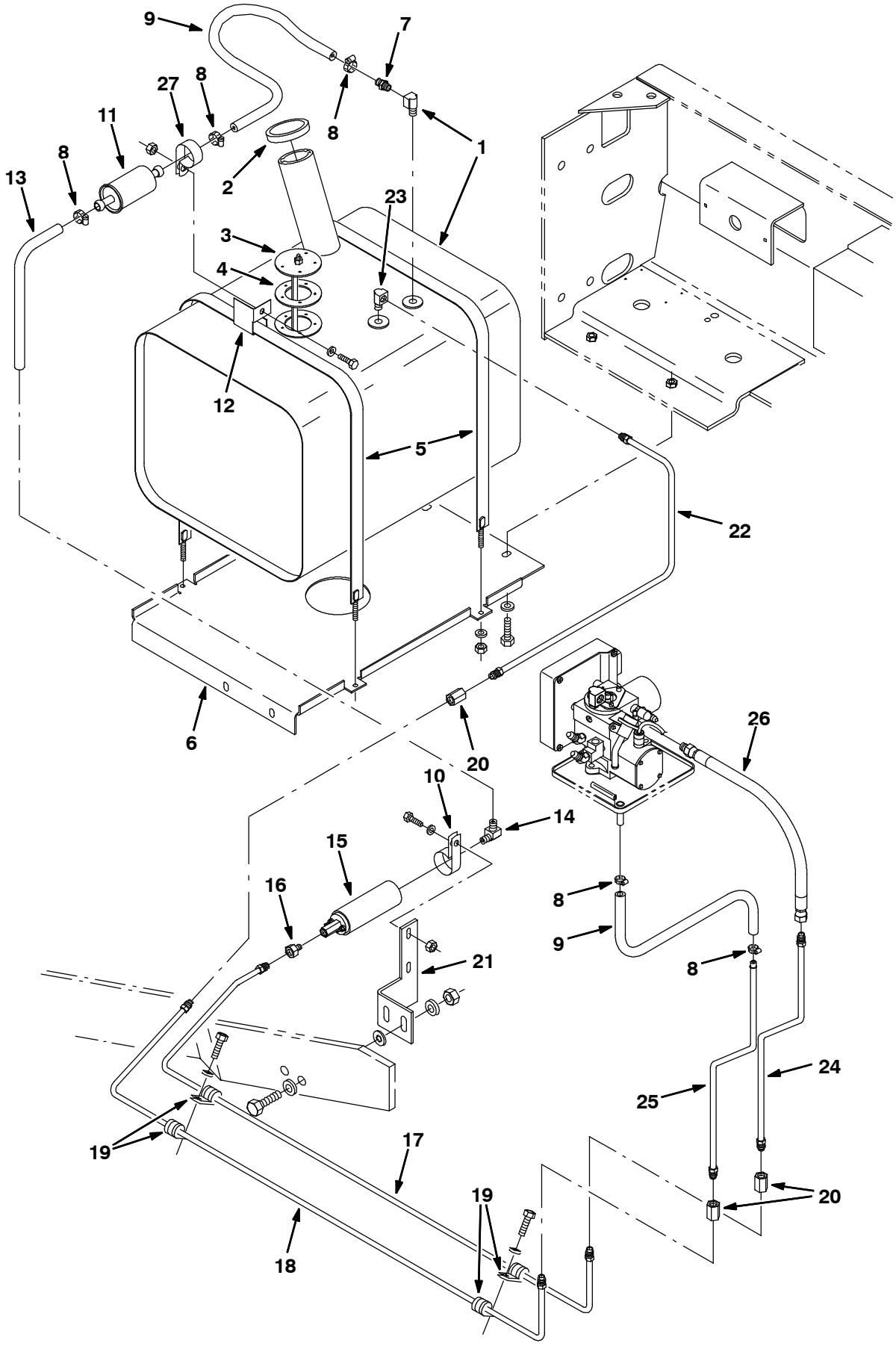

353871 - 800, G

Fig. 52 - Engine Fuel Tank Group, Gas (004937- 005999)

	Ref.	Part No.	Serial Number	Description	Qty.
▽	1	76907	(004937- 005999)	Tank, Fuel, 14 Gas 14.7 13.0 19.0l	1
▲	2	48267	(004937- 005999)	Cap, Tank, Fuel, 2.3neck 2.6d	1
▲	3	21731	(004937- 005999)	Send- Unit	1
▲	4	21732	(004937- 005999)	Gasket, Send- Unit	1
	5	87396	(004937- 005999)	Strap Wldt, Tank, .06th X 1.0w, 37.7l	2
	6	70477	(004937- 005999)	Plate, Mtg, Tank, Gas	1
	7	392629	(004937- 005999)	Fitting, Brs, Str, Bm05/Pm04	1
	8	43844	(004937- 005999)	Clamp, Hose, Wormdrive, 0.25- 0.62d	5
	9	82509	(004937- 005999)	Hose, Fuel, 0.31id 11.0l	2
	10	86328	(004937- 005999)	Clamp, Cable, Stl, 1.50d X 0.75w, 1h	1
	11	371662	(004937- 005999)	Filter, Fuel	1
	12	70767	(004937- 005999)	Bracket, Mtg, Fuelline	1
	13	82510	(004937- 005999)	Hose, Fuel, 0.31id 14.0l	1
	14	53029	(004937- 005999)	Fitting, Brs, E90, Em05/Pm02	1
	15	371661	(004937- 005999)	Pump, Fuel, Gas	1
	16	40585	(004937- 005999)	Fitting, Brs, Str, If05/Pm02	1
	17	392594	(004937- 005999)	Fuelline, .31d 05if/05if	1
	18	392593	(004937- 005999)	Fuelline, .31d 05if/05f	1
	19	76736	(004937- 005999)	Clamp, Cable, Stl, 0.38d X 0.62w, 1h	4
	20	25610	(004937- 005999)	Fitting, Brs, Str, If05/If05	3
	21	75854	(004937- 005999)	Bracket, Pump, Fuel	1
	22	392597	(004937- 005999)	Fuelline, .31d 05if/05if	1
	23	15555- 1	(004937- 005999)	Fitting, Brs, E90, If05/Pm02	1
	24	393200	(004937- 005999)	Fuelline, .31d 05if/05if	1
	25	392649	(004937- 005999)	Fuelline, .31d 05if/Bea	1
	26	70173	(004937- 005999)	Hose, 0050, 04, Im05str /If05str , 10.0	1
	27	41016	(004937- 005999)	Clamp, Cable, Stl, 2.25d X 1.0w, 1h	1

Fig. 53 - Engine Fuel Tank Group, Gas (006000-006999)

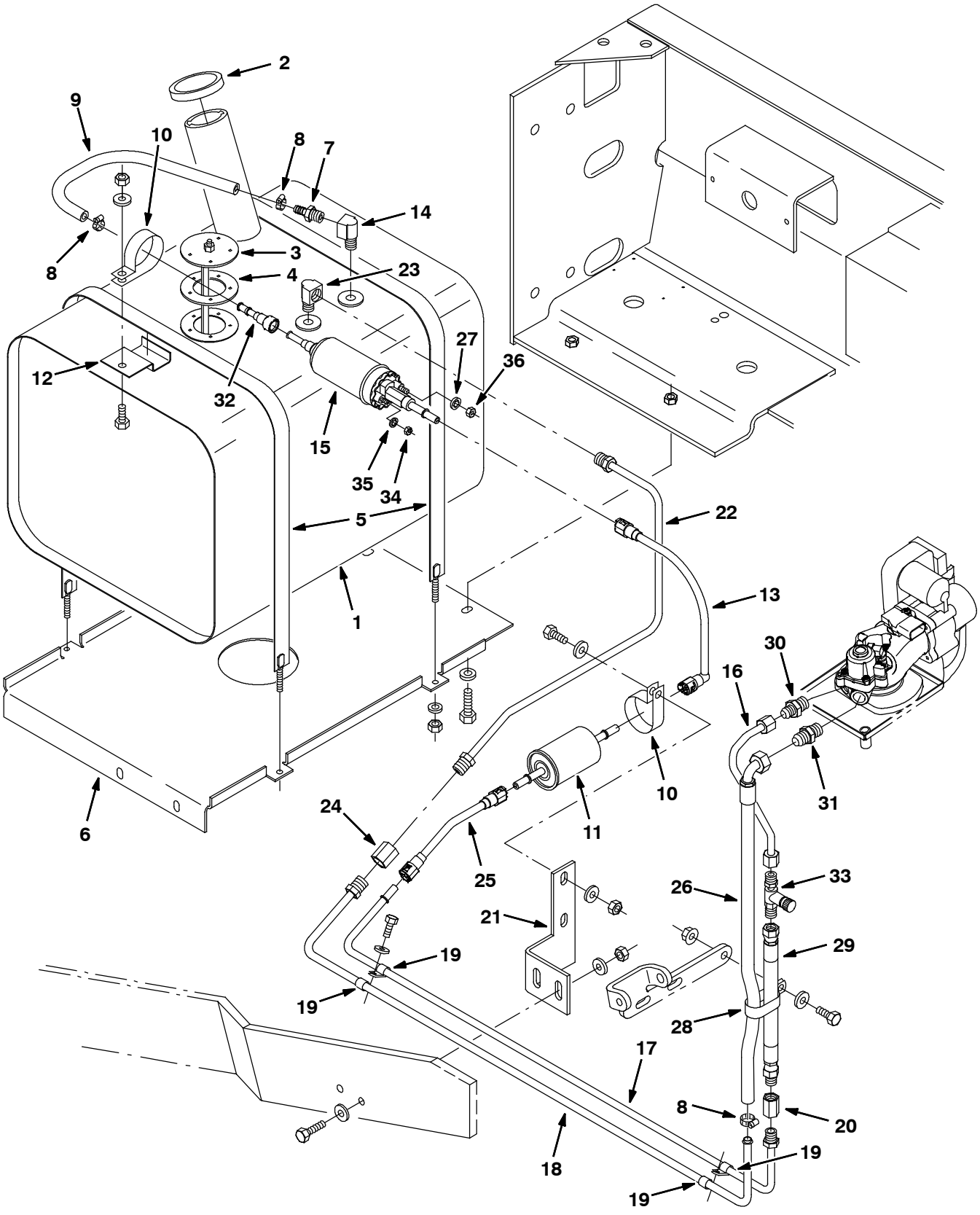

353871 - 800, G

Fig. 53 - Engine Fuel Tank Group, Gas (006000-006999)

	Ref.	Part No.	Serial Number	Description	Qty.
▽	1	1012110	(006000-006999)	Tank, Fuel, 14 Gas 14.7 13.0 19.0	1
▲	2	48267	(006000-006999)	Cap, Tank, Fuel, 2.3neck 2.6d	1
▲	3	21731	(006000-006999)	Send-Unit, Fuel, Ohm	1
▲	4	21732	(006000-006999)	Gasket, Sender, Fuel	1
	5	87396	(006000-006999)	Strap Wldt, Tank, .06th X 1.0w, 37.7l	2
	6	70477	(006000-006999)	Plate, Mtg, Tank, Gas	1
	7	392629	(006000-006999)	Fitting, Brs, Str, Pm04/Bm05	1
	8	43844	(006000-006999)	Clamp, Hose, Wormdrive, 0.25-0.62d	3
	9	83591	(006000-006999)	Hose, Fuel, 0.31id 16.0l	1
	10	1011895	(006000-006999)	Clamp, Cable, Stl, 2.00d X 0.75w, 1h	2
	11	372440	(006000-006999)	Fuel, Fltr [Gm 1.6l/3.0l]	1
	12	1008988	(006000-006999)	Bracket, Fltr, Fuel	1
	13	1012250	(006000-006999)	Fuelline, .31d Str/E90, Plstc	1
	14	27048	(006000-006999)	Fitting, Brs, E90, Pm04/Pf04	1
	15	9006592	(006000-006999)	Pump, Fuel	1
	16	1012469	(006000-006999)	Fuelline, .31d 05if/05jf Stl	1
	17	1011943	(006000-006999)	Fuelline, .31d 05if/Qm Stl	1
	18	1011942	(006000-006999)	Fuelline, .38d 06if/Bea Stl	1
	19	76736	(006000-006999)	Clamp, Cable, Stl, 0.38d X 0.62w, 1h	4
	20	25610	(006000-006999)	Fitting, Brs, Str, If05/If05	1
	21	1012018	(006000-006999)	Bracket, Pump, Fuel	1
	22	1011941	(006000-006999)	Fuelline, .38d 06if/06if Stl	1
	23	54140	(006000-006999)	Fitting, Brs, E90, If06/Pm04	1
	24	392598	(006000-006999)	Fitting, Brs, Str, If06/If06	1
	25	1012248	(006000-006999)	Fuelline, .31d Str/Str, Plstc	1
	26	1013030	(006000-006999)	Hose, Fuel, Jf06e90, 20.3l	1
	27	32980	(006000-006999)	Washer, Lock, Int, #10	1
	28	09570	(006000-006999)	Clamp, Cable, Stl, 0.9x1.8x0.62w, 1h	1
	29	70173	(006000-006999)	Hose, 0050, 04, Im05str /If05str , 10.0	1
	30	1012677	(006000-006999)	Fitting, Hyd, Str, Jm05/Om06	1
	31	56690	(006000-006999)	Fitting, Hyd, Str, Jm06/Om06	1
	32	1013086	(006000-006999)	Connector, Fuel, Qf	1
	33	1014595	(006000-006999)	Adaptor, Fuelline	1
	34	42368	(006000-006999)	Nut, Hex, Std, M4 X 0.7, 8	1
	35	32978	(006000-006999)	Washer, Lock, Int, #08	1
	36	50335	(006000-006999)	Nut, Hex, Std, M5 X 0.8, 8	1

Fig. 54 - Engine Fuel Tank Group, Gas (007000-)

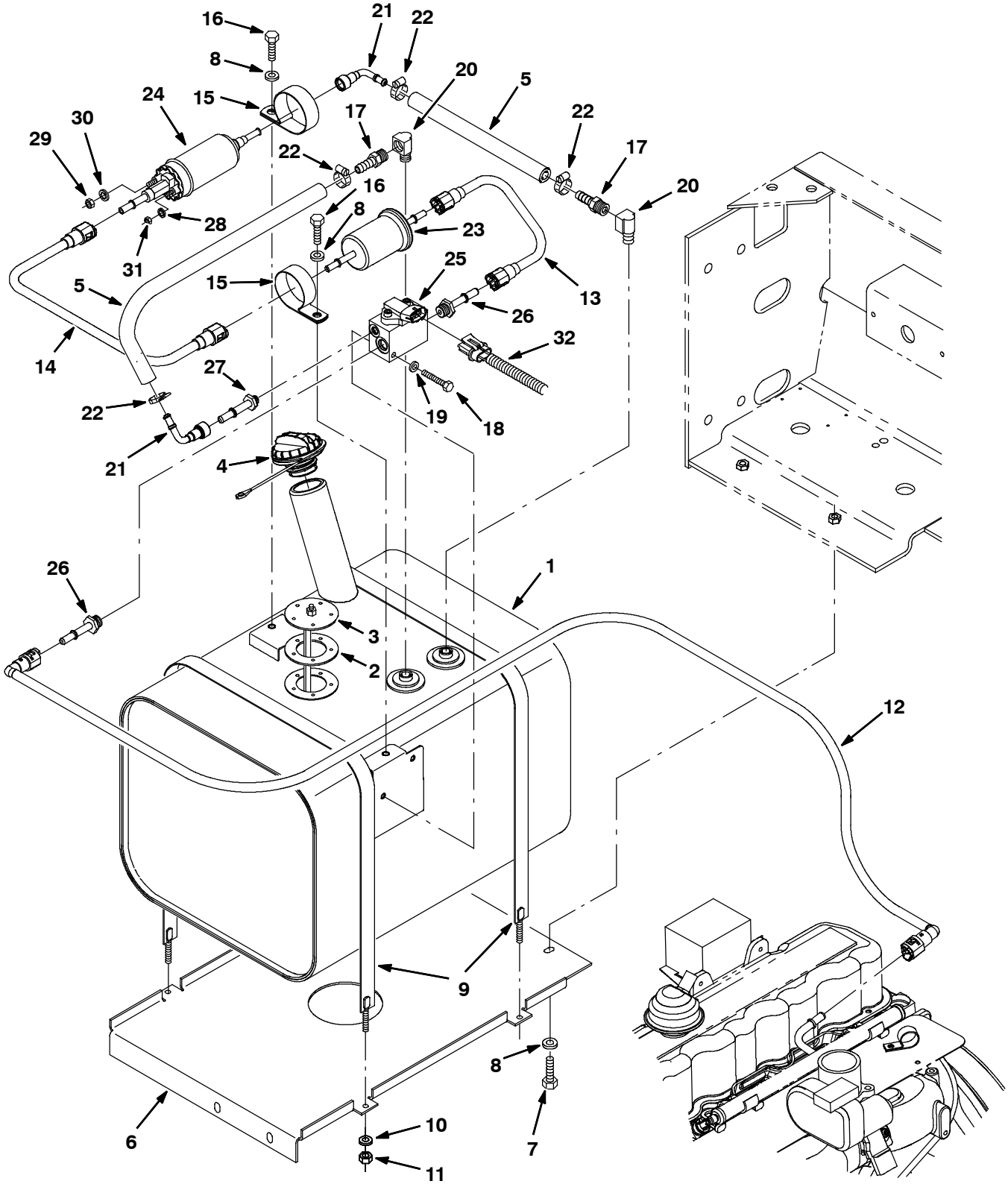

353871 - 800, G

Fig. 54 - Engine Fuel Tank Group, Gas (007000-)

	Ref.	Part No.	Serial Number	Description	Qty.
▽	1	1029502	(007000-)	Tank, Fuel, 14.0gal, 14.66w 13.0hi 19.0l	1
▲	2	1033897	(007000-)	Gasket, Sender, Fuel	1
▲	3	1033899	(007000-)	Send- Unit, Fuel [800/810 2007]	1
▲	4	1032812	(007000-)	Cap, Fuel, Tank	1
	5	1033746	(007000-)	Hose, Fuel, 0.31id [Evap Emission 07]	2
	6	70477	(007000-)	Plate, Mtg, Tank, Gas	1
	7	16931	(007000-)	Screw, Hex, M8 X 1.25 X 20, 8.8	4
	8	32491	(007000-)	Washer, Flat, 0.31, Std	6
	9	87396	(007000-)	Strap Wldt, Tank, 0.06 1.0w 37.7l	2
	10	32483	(007000-)	Washer, Flat, 0.25, Sae	4
	11	32981	(007000-)	Nut, Hex, Lock, .25- 20, Nl	4
	12	1030485	(007000-)	Fuelline, .31d E90, 05/06, Plstc	1
	13	1013509	(007000-)	Fuelline, .31d Str/Str, Plstc [8200]	1
	14	1034676	(007000-)	Fuelline, .31d Str/Str,Plstc[M20/T20 07]	1
	15	1011895	(007000-)	Clamp, Cable, Stl, 2.00d X 0.75w, 1hole	1
	16	16931	(007000-)	Screw, Hex, M8 X 1.25 X 20, 8.8	1
	17	392629	(007000-)	Fitting, Brs, Str, Bm05/Pm04	2
	18	06949	(007000-)	Screw, Hex, M6 X 1.0 X 50, 8.8	2
	19	32490	(007000-)	Washer, Flat, 0.25, Std	2
	20	9000355	(007000-)	Fitting, Brs, E90, Em05/Pm04	2
	21	1019939	(007000-)	Connector, Fuel, E90, Qf	1
	22	43844	(007000-)	Clamp, Hose, Wormdrive, 0.25- 0.62d, .31w	4
	23	372440	(007000-)	Filter, Fuel [Gm 1.6l/3.0l]	1
	24	9006592	(007000-)	Pump, Fuel	1
	25	1028924	(007000-)	Manifold, Gas, Relief, Valve	1
	26	1029293	(007000-)	Fitting, Fuel, Str, 0.56- 18 [07 Eng]	2
	27	1029295	(007000-)	Fitting, Fuel, Str, 0.38- 24 [07 Eng]	1
	28	32980	(007000-)	Washer, Lock, Int, #10	1
	29	42368	(007000-)	Nut, Hex, Std, M4 X 0.70, 8	1
	30	32978	(007000-)	Washer, Lock, Int, #08	1
	31	50335	(007000-)	Nut, Hex, Std, M5 X 0.80, 8	1
	32	385009	(007000-)	Harness, Eng	1

Fig. 55 - Engine Fuel Tank Group, LPG (004000-004936)

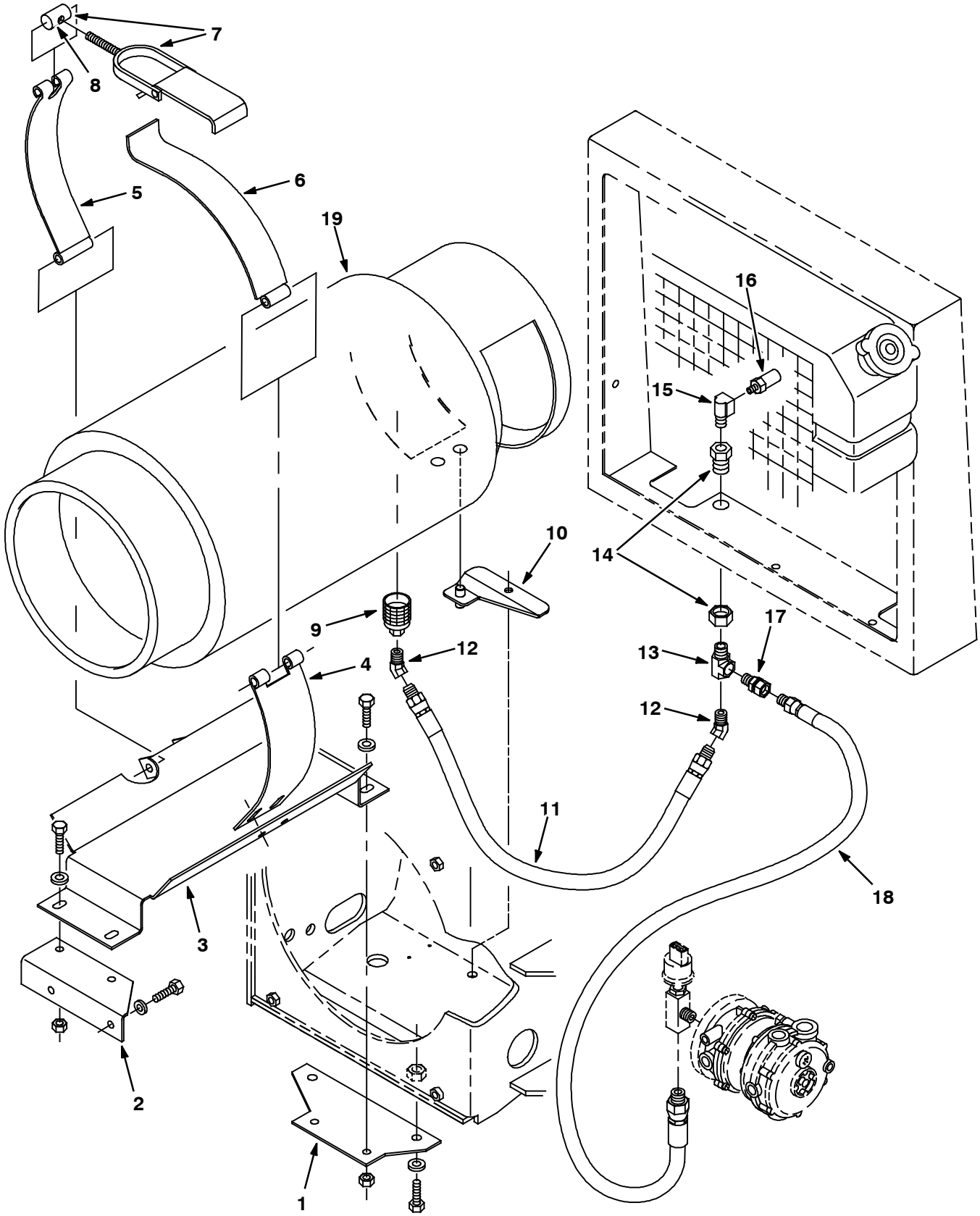

07648 - LP, NA

Fig. 55 - Engine Fuel Tank Group, LPG (004000-004936)

	Ref.	Part No.	Serial Number	Description	Qty.
	1	70718	(004000-004936)	Plate, Mtg	1
	2	70719	(004000-004936)	Angle, Mtg	1
	3	70435	(004000-004936)	Bracket Wldt, Tank, Lpg	1
	4	58589	(004000-004936)	Strap, Mtg.- Lp Tank	1
	5	58590	(004000-004936)	Strap, Tank Retainer - Lp	1
	6	57297	(004000-004936)	Strap, Hinge - Lp Tank Mtg	1
▽	7	53400-1	(004000-004936)	Latch Assy, Lpg Tank Mtg,W/Nut	1
▲	8	53400-4	(004000-004936)	Nut, Adjustable, Lpg Tank Mtg	1
	9	26496	(004000-004936)	Coupling,Quickdisc, Lpg, Shwd	1
	10	74089	(004000-004936)	Plate Wldt.	1
	11	22308-3	(004000-004936)	Hose, Lpg, 4Lpg X 35.0Lg	1
	12	47720	(004000-004936)	Ftg-Hyd E45 Pm04/Pf04	2
	13	56976A	(004000-004936)	Ftg-Tee Npt 04Pm-04Pf-04Pf	1
	14	78122	(004000-004936)	Ftg,Bulkhead .25Npt Wh W21204	1
	15	27048	(004000-004936)	Ftg-El90 Npt/Npt 04Pf/04Pm	1
	16	24047	(004000-004936)	Valve, Press Relief, Lpg Rego	1
	17	11442-23	(004000-004936)	Ftg-Str Npt/Npt S04Pf-04Pm	1
	18	374158	(004000-004936)	Hose, Lpg, 4Lpg X 40.0Lg	1
	19	24928-1	(004000-004936)	Tank-Lp, 33#,Liq,Both,Fill Ga	1

Fig. 56 - Engine Fuel Tank Group, LPG (004937-005999)

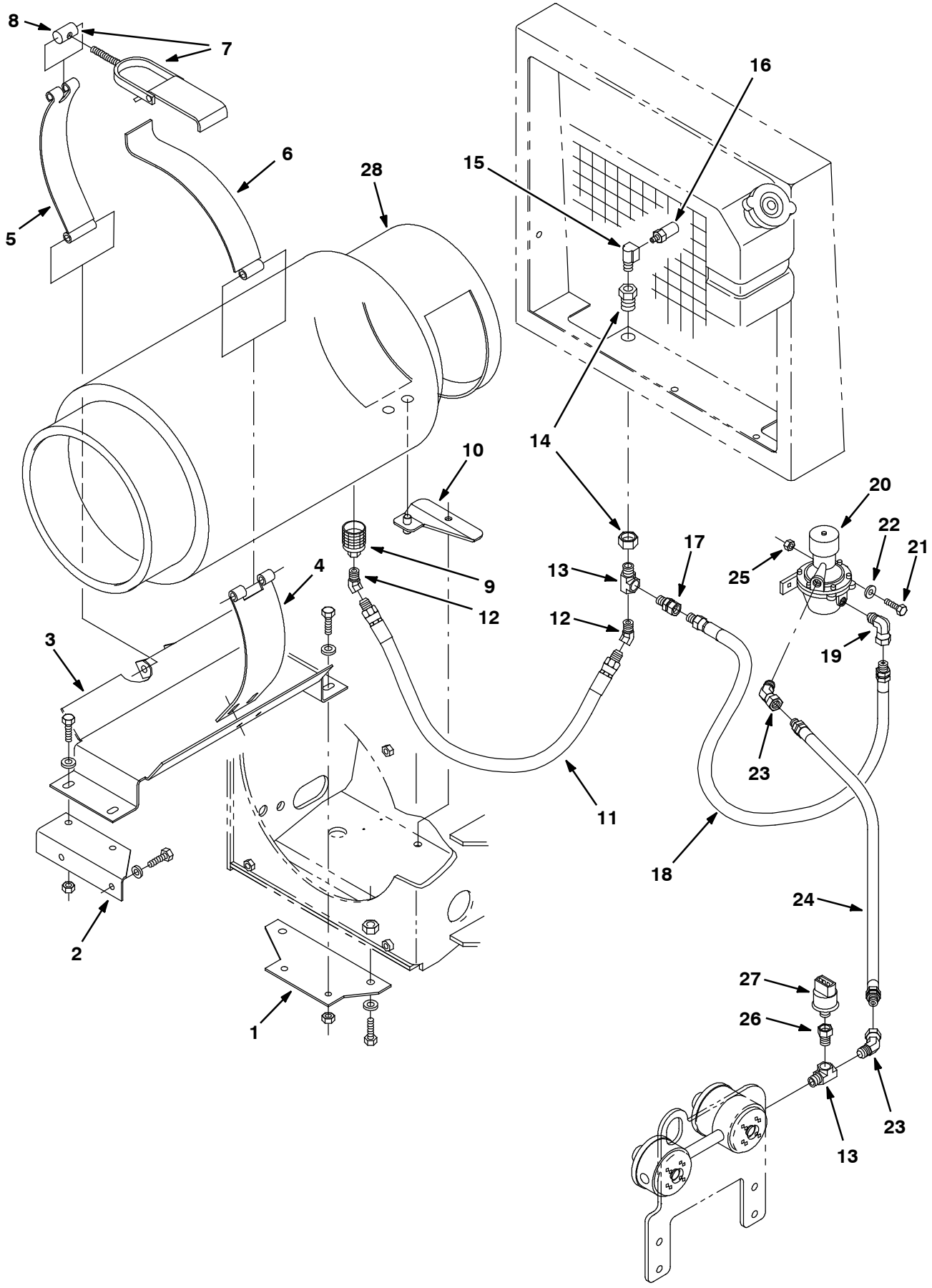

353872 - LP, NA

Fig. 56 - Engine Fuel Tank Group, LPG (004937-005999)

	Ref.	Part No.	Serial Number	Description	Qty.
	1	70718	(004937-005999)	Plate, Mtg	1
	2	70719	(004937-005999)	Angle, Mtg	1
	3	70435	(004937-005999)	Bracket Wldt, Tank, Lpg	1
	4	58589	(004937-005999)	Strap, Mtg.- Lp Tank	1
	5	58590	(004937-005999)	Strap, Tank Retainer - Lp	1
	6	57297	(004937-005999)	Strap, Hinge - Lp Tank Mtg	1
▽	7	53400-1	(004937-005999)	Latch Assy, Lpg Tank Mtg,W/Nut	1
▲	8	53400-4	(004937-005999)	Nut, Adjustable, Lpg Tank Mtg	1
	9	26496	(004937-005999)	Coupling,Quickdisc, Lpg, Shwd	1
	10	74089	(004937-005999)	Plate Wldt.	1
	11	22308-3	(004937-005999)	Hose, Lpg, 4Lpg X 35.0Lg	1
	12	47720	(004937-005999)	Ftg-Hyd E45 Pm04/Pf04	2
	13	56976A	(004937-005999)	Ftg-Tee Npt 04Pm-04Pf-04Pf	2
	14	78122	(004937-005999)	Ftg,Bulkhead .25Npt Wh W21204	1
	15	27048	(004937-005999)	Ftg-El90 Npt/Npt 04Pf/04Pm	1
	16	24047	(004937-005999)	Valve, Press Relief, Lpg Rego	1
	17	11442-23	(004937-005999)	Ftg-Str Npt/Npt S04Pf-04Pm	1
	18	22324	(004937-005999)	Hose, Lpg, Med05, Pm04str/Sm04str, 31.0l	1
	19	11442-1	(004937-005999)	Fitting, Hyd, E90, Swivel Pf04/Pm04	1
▽	20	53395-2	(004937-005999)	Filter, Fuelock, [Ballwin#4-2384b]	1
▲		48282	(004937-005999)	Kit, Repair, Fuelock, Mv 310-6	1
	21	12316	(004937-005999)	Screw, Hex, M05 X 0.8 X 25, Ss	2
	22	386063	(004937-005999)	Washer, 0.25b 1.12d .12, Ss	2
	23	47720	(004937-005999)	Fitting, Hyd, E45, Pm04/Pf04	2
	24	62865	(004937-005999)	Hose, Lpg, Med05, Pm04str/Sm04str, 67.0l	1
	25	50335	(004937-005999)	Nut, Hex, Std, M05 X 0.8	2
	26	17414	(004937-005999)	Fitting, Pipe, Str, Pm04/Pf02	1
	27	23156	(004937-005999)	Switch, Press, 12vdc 08a Spst Nc 0070psi	1
	28	24928-1	(004937-005999)	Tank-Lp, 33#,Liq,Both,Fill Ga	1

Fig. 57 - Engine Fuel Tank Group, LPG (006000-006999)

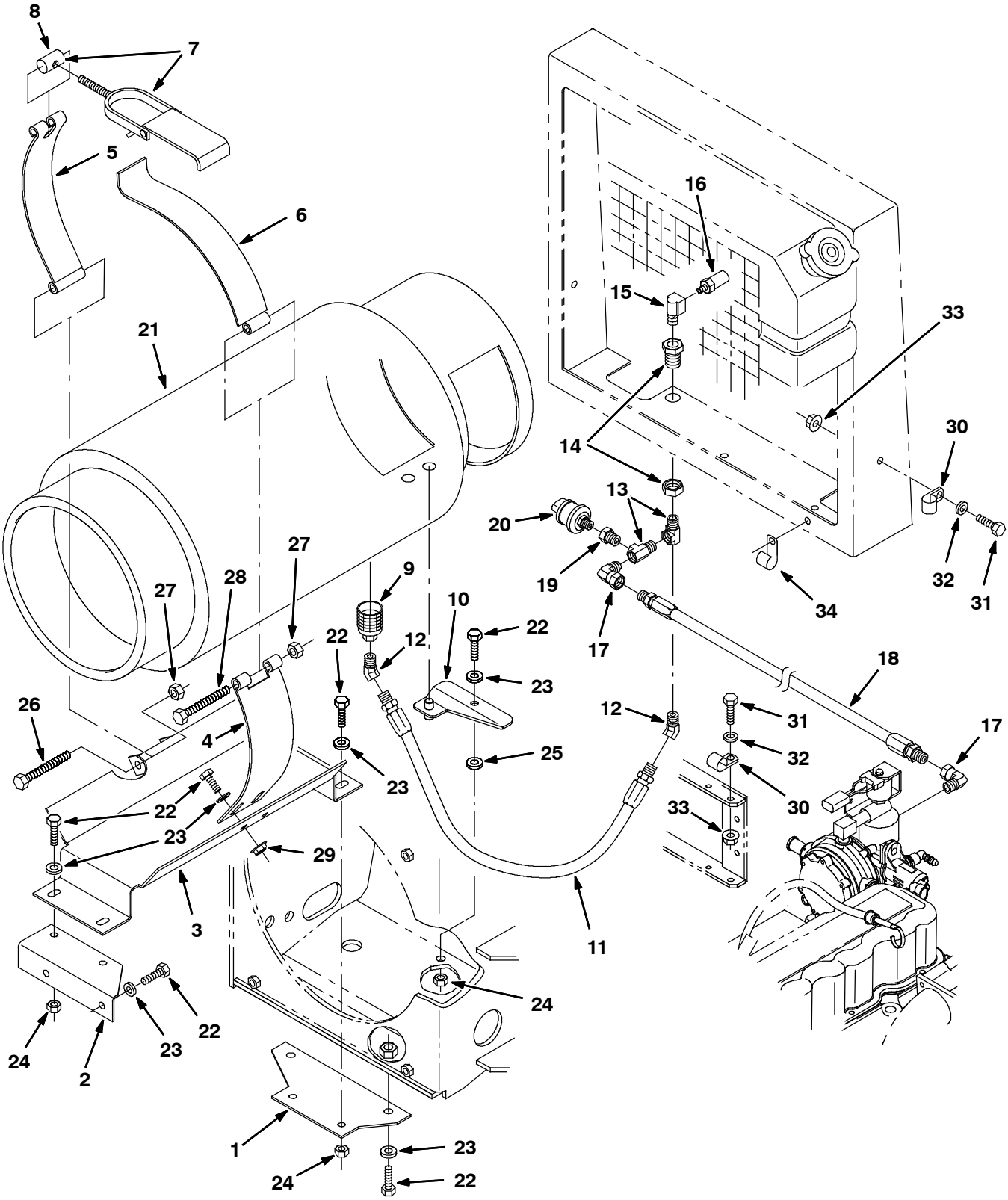

353872 - LP, NA

Fig. 57 - Engine Fuel Tank Group, LPG (006000-006999)

	Ref.	Part No.	Serial Number	Description	Qty.
	1	70718	(006000-006999)	Plate, Mtg	1
	2	70719	(006000-006999)	Angle, Mtg	1
	3	70435	(006000-006999)	Bracket Wldt, Tank, Lpg	1
	4	58589	(006000-006999)	Strap, Mtg.- Lp Tank	1
	5	58590	(006000-006999)	Strap, Tank Retainer - Lp	1
	6	57297	(006000-006999)	Strap, Hinge - Lp Tank Mtg	1
▽	7	53400-1	(006000-006999)	Latch Assy, Lpg Tank Mtg,W/Nut	1
▲	8	53400-4	(006000-006999)	Nut, Adjustable, Lpg Tank Mtg	1
	9	26496	(006000-006999)	Coupling,Quickdisc, Lpg, Shwd	1
	10	74089	(006000-006999)	Plate Wldt.	1
	11	374158	(006000-006999)	Hose, Lpg, Med05, Pm04str/Sm04str, 46.0l	1
	12	47720	(006000-006999)	Ftg-Hyd E45 Pm04/Pf04	2
	13	56976A	(006000-006999)	Ftg-Tee Npt 04Pm-04Pf-04Pf	2
	14	78122	(006000-006999)	Ftg,Bulkhead .25Npt Wh W21204	1
	15	27048	(006000-006999)	Ftg-El90 Npt/Npt 04Pf/04Pm	1
	16	24047	(006000-006999)	Valve, Press Relief, Lpg Rego	1
	17	11442-1	(006000-006999)	Fitting, Hyd, E90, Swivel Pf04/Pm04	2
	18	22308-3	(006000-006527)	Hose, Lpg, 4Lpg X 35.0Lg	1
	18	19760	(006528-006999)	Hose, Lpg, Med05, Pm04str/Sm04str, 055.0	1
	19	17414	(006000-006999)	Fitting, Pipe, Str, Pm04/Pf02	1
	20	23156	(006000-006999)	Switch, Press, 12vdc 08a Spst Nc 0070psi	1
	21	24928-1	(006000-006999)	Tank-Lp, 33#,Liq,Both,Fill Ga	1
	22	16931	(006000-006999)	Screw, Hex, M8 X 1.25 X 20, 8.8	11
	23	32491	(006000-006999)	Washer, Flat, 0.31, Std	11
	24	08709	(006000-006999)	Nut, Hex, Lock, M8 X 1.25, Nl	7
	25	43611	(006000-006999)	Washer, Flat, 0.39b 0.75d .06, Nyl	1
	26	35707	(006000-006999)	Screw, Hex, .38-16 X 3.00, G5	1
	27	50902	(006000-006999)	Nut, Hex, Lock, .38-16, Nl	2
	28	20177	(006000-006999)	Screw, Hex, .38-16 X 4.00, G5	1
	29	07791	(006000-006999)	Nut, Hex, Flng, M8 X 1.25	2
	30	67767	(006528-006999)	Clamp, Cable, Stl, 0.69d X 0.62w, 1hole	2
	31	06942	(006528-006999)	Screw, Hex, M6 X 1.0 X 16, 8.8	2
	32	19066	(006528-006999)	Washer, Flat, #10	2
	33	07790	(006528-006999)	Nut, Hex, Flng, M6 X 1.00	2
	34	30407	(006528-006999)	Clip, Keeper, Open	1

Fig. 58 - Engine Fuel Tank Group, LPG (007000-)

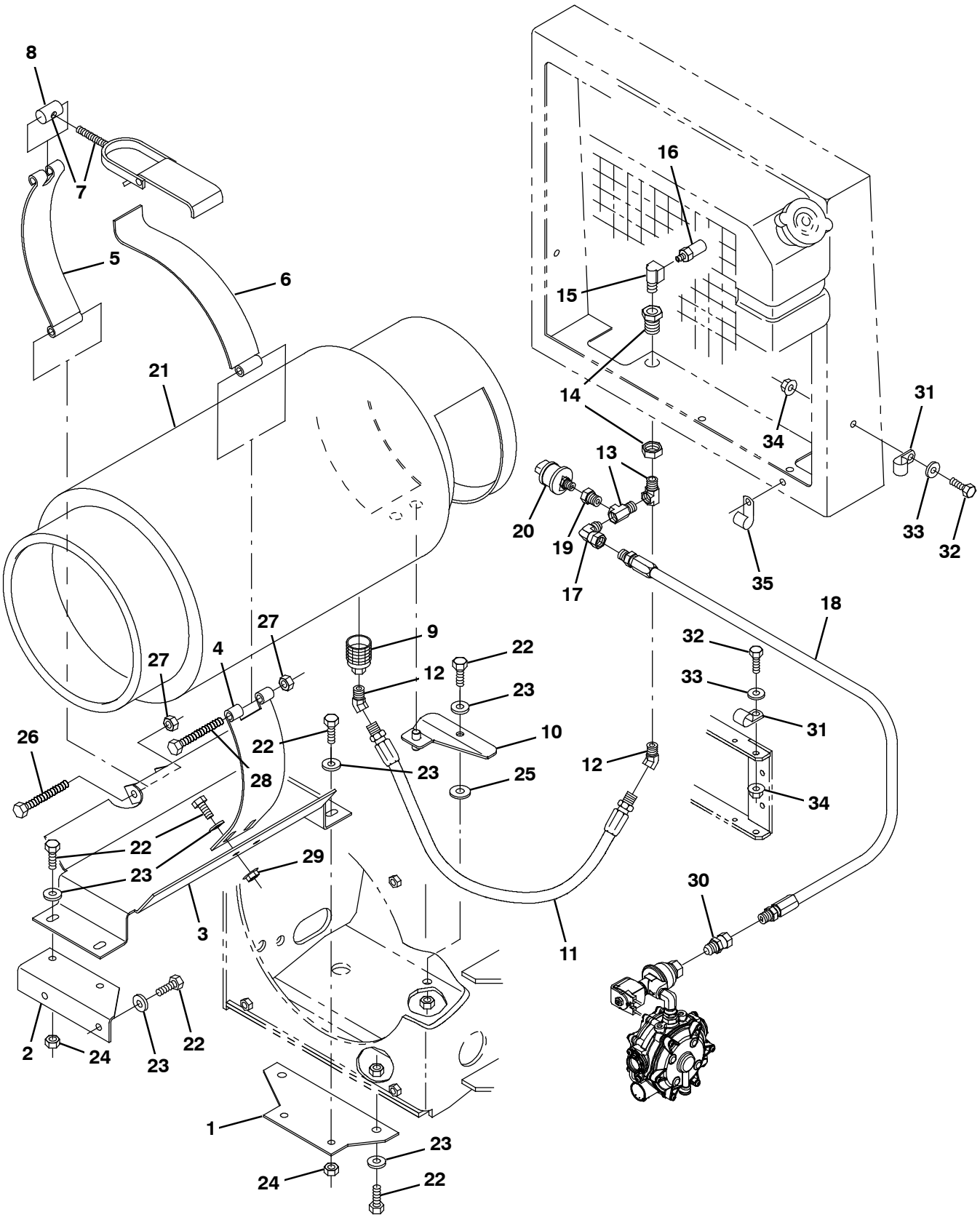

353872 - LP, NA

Fig. 58 - Engine Fuel Tank Group, LPG (007000-)

	Ref.	Part No.	Serial Number	Description	Qty.
	1	70718	(007000-)	Plate, Mtg	1
	2	70719	(007000-)	Angle, Mtg	1
	3	70435	(007000-)	Bracket Wldt, Tank, Lpg	1
	4	58589	(007000-)	Strap, Mtg.- Lp Tank	1
	5	58590	(007000-)	Strap, Tank Retainer - Lp	1
	6	57297	(007000-)	Strap, Hinge - Lp Tank Mtg	1
▽	7	53400-1	(007000-)	Latch Assy, Lpg Tank Mtg,W/Nut	1
▲	8	53400-4	(007000-)	Nut, Adjustable, Lpg Tank Mtg	1
	9	26496	(007000-)	Coupling,Quickdisc, Lpg, Shwd	1
	10	74089	(007000-)	Plate Wldt.	1
	11	374158	(007000-)	Hose, Lpg, Med05, Pm04str/Sm04str, 46.0l	1
	12	47720	(007000-)	Ftg-Hyd E45 Pm04/Pf04	2
	13	56976A	(007000-)	Ftg-Tee Npt 04Pm-04Pf-04Pf	2
	14	78122	(007000-)	Ftg,Bulkhead .25Npt Wh W21204	1
	15	27048	(007000-)	Ftg-El90 Npt/Npt 04Pf/04Pm	1
	16	24047	(007000-)	Valve, Press Relief, Lpg Rego	1
	17	11442-1	(007000-)	Fitting, Hyd, E90, Swivel Pf04/Pm04	2
	18	62865	(007000-)	Hose, Lpg, Med05, Pm04str/Sm04str, 067.0	1
	19	17414	(007000-)	Fitting, Pipe, Str, Pm04/Pf02	1
	20	23156	(007000-)	Switch, Press, 12vdc 08a Spst Nc 0070psi	1
	21	24928-1	(007000-)	Tank-Lp, 33#,Liq,Both,Fill Ga	1
	22	16931	(007000-)	Screw, Hex, M8 X 1.25 X 20, 8.8	9
	23	32491	(007000-)	Washer, Flat, 0.31, Std	9
	24	08709	(007000-)	Nut, Hex, Lock, M8 X 1.25, Nl	7
	25	43611	(007000-)	Washer, Flat, 0.39b 0.75d .06, Nyl	1
	26	35707	(007000-)	Screw, Hex, .38-16 X 3.00, G5	1
	27	50902	(007000-)	Nut, Hex, Lock, .38-16, Nl	2
	28	20177	(007000-)	Screw, Hex, .38-16 X 4.00, G5	1
	29	07791	(007000-)	Nut, Hex, Flng, M8 X 1.25	2
	30	11442-23	(007000-)	Fitting, Pipe, Str, Pm04/Sf04	1
	31	67767	(007000-)	Clamp, Cable, Stl, 0.69d X 0.62w, 1hole	2
	32	06942	(007000-)	Screw, Hex, M6 X 1.0 X 16, 8.8	2
	33	19066	(007000-)	Washer, Flat, #10	2
	34	07790	(007000-)	Nut, Hex, Flng, M6 X 1.00	2
	35	30407	(007000-)	Clip, Keeper, Open	1

Fig. 59 - Engine Radiator Hose Group (004000-004936)

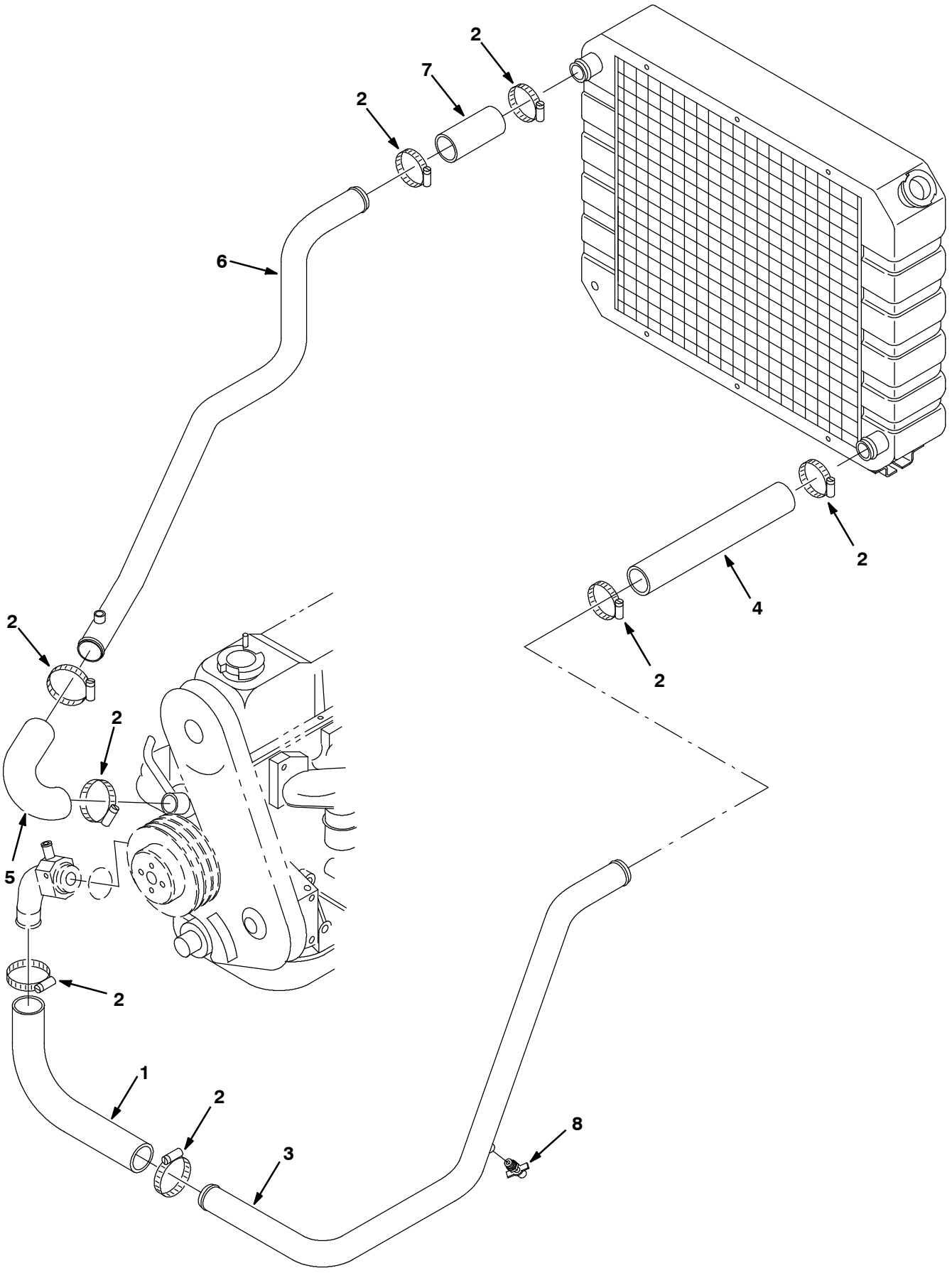

07723 - G, LP

Fig. 59 - Engine Radiator Hose Group (004000- 004936)

Ref.	Part No.	Serial Number	Description	Qty.
1	83690	(004000- 004936)	Hose, Radiator, Lower	1
2	11531	(004000- 004936)	Clamp- Wormdrive, 1.06- 2.00D	8
3	70754	(004000- 004936)	Tube, Coolant, 1.5od Lower	1
4	70635	(004000- 004936)	Hose, Rbr 1.50id 1.88od 12.0 L	1
5	70636	(004000- 004936)	Hose, Radiator, Upper	1
6	83691	(004000- 004936)	Tube, Radiator, Upper, Gas/Lpg	1
7	78750	(004000- 004936)	Hose, Rbr, 1.50id 1.88od 6.0 L	1
8	54911- 32	(004000- 004936)	Drain Cock, .25npt	1

Fig. 60 - Engine Radiator Hose Group (004937-005999)

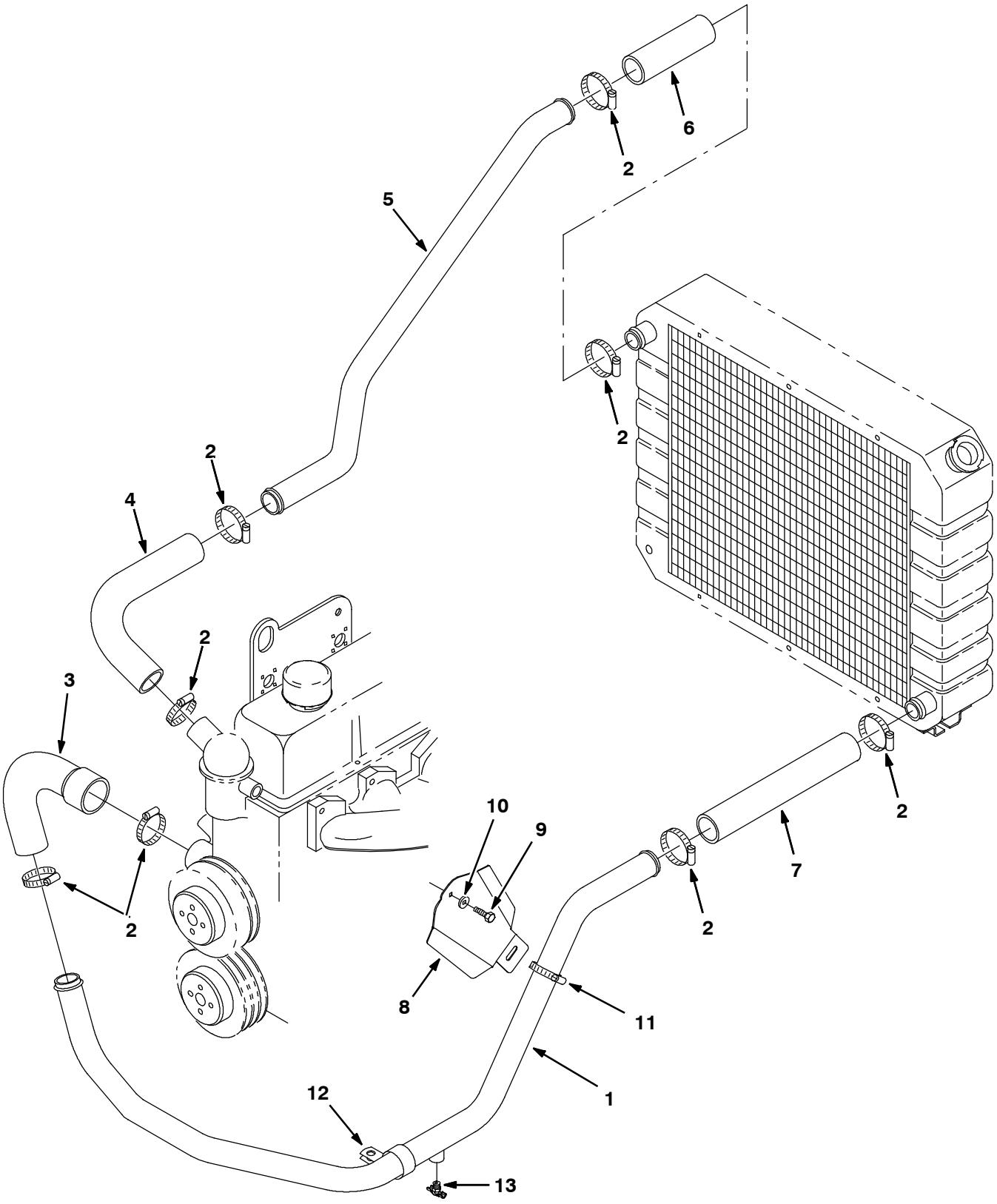

353875 - G, LP

Fig. 60 - Engine Radiator Hose Group (004937-005999)

Ref.	Part No.	Serial Number	Description	Qty.
1	392590	(004937-005999)	Tube, Coolant, 1.5d W/.25npt Low, G/Lpg	1
2	11531	(004937-005999)	Clamp, Hose, Wormdrive, 1.06-2.00d	8
3	393229	(004937-005999)	Hose, Rbr, E120 1.50id 1.20id 06.4 2.7	1
4	83690	(004937-005999)	Hose, Rbr, E90 1.50id 1.50id 09.4 6.3	1
5	392591	(004937-005999)	Tube, Coolant, 1.5d Upper, Gas/Lpg	1
6	78750	(004937-005999)	Hose, Rbr, 1.50id 1.88od 12.0l	1
7	74944	(004937-005999)	Hose, Rbr, 1.50id 1.88od 06.0l	1
8	393216	(004937-005999)	Plate, Shield, Heat, W/Label	1
9	54396	(004937-005999)	Screw, Hex, .31-18 X 0.75, 5	1
10	32491	(004937-005999)	Washer, Flat, .31 Std	1
11	79381	(004937-005999)	Clamp, Hose, Wormdrive, 1.25-2.00d	1
12	53468	(004937-005999)	Clamp, Cable, Stl, 1.75d X 1.00w, 1h	1
13	54911-32	(004937-005999)	Fitting, Draincock, .25npt	1

Fig. 61 - Engine Radiator Hose Group (006000-006999)

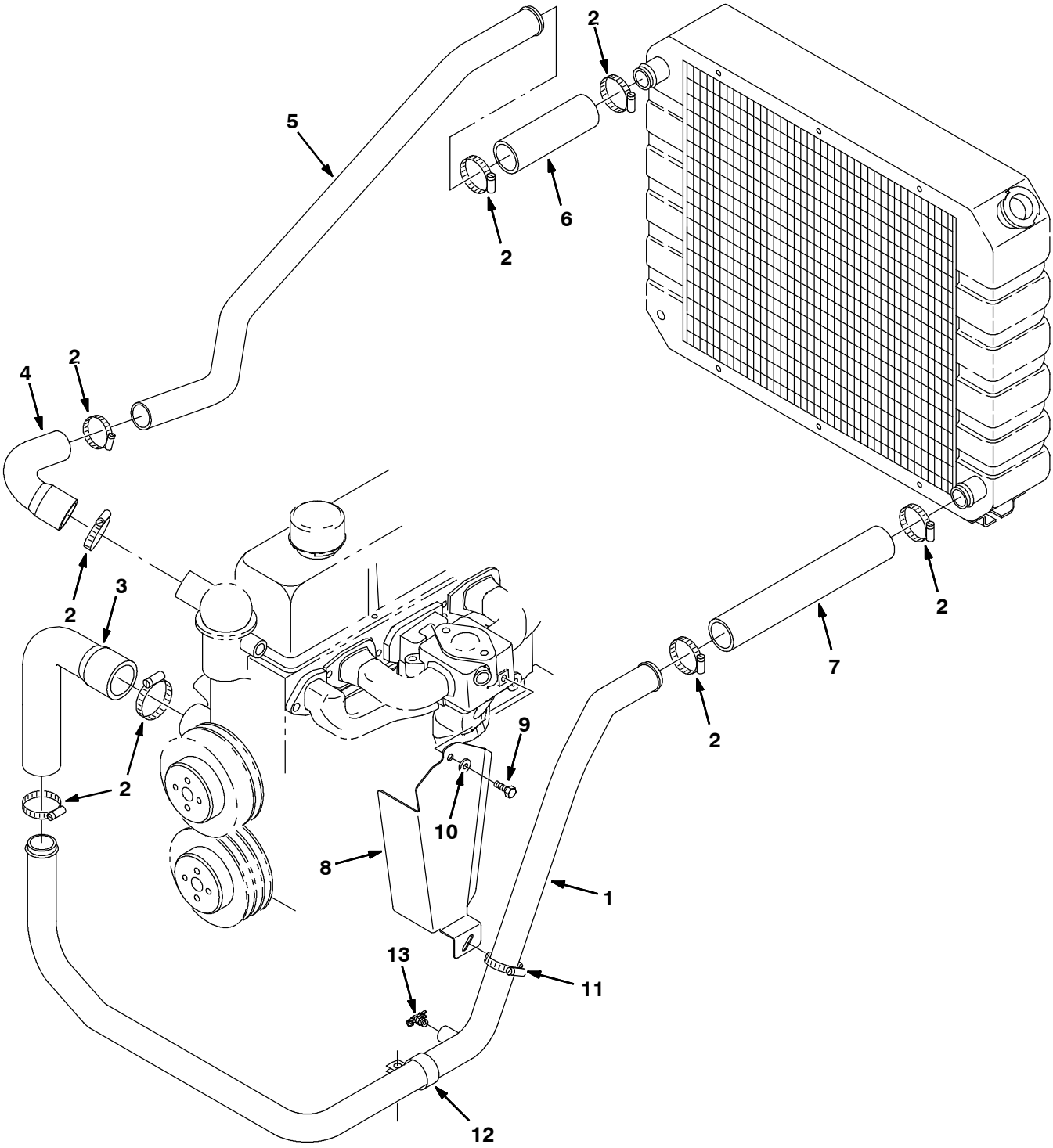

353875 - G, LP

Fig. 61 - Engine Radiator Hose Group (006000-006999)

Ref.	Part No.	Serial Number	Description	Qty.
1	392590	(006000-006999)	Tube, Coolant, 1.5d W/.25npt Low, G/Lpg	1
2	11531	(006000-006999)	Clamp, Hose, Wormdrive, 1.06-2.00d	8
3	392647	(006000-006999)	Hose, Coolant, 1.50id To 1.75id, Mold	1
4	393229	(006000-006171)	Hose, Rbr, E120 1.50id 1.20id 05.0 05.2	1
4	1012737	(006172-006999)	Hose, Rbr, E90 1.50id 1.62id 0.40 04.0	1
5	392591	(006000-006999)	Tube, Coolant, 1.5d Upper, Gas/Lpg	1
6	78750	(006000-006999)	Hose, Rbr, 1.50id 1.88od 06.0l	1
7	70635	(006000-006999)	Hose, Rbr, 1.50id 1.88od 12.0l	1
8	9000360	(006000-006999)	Plate, Shield, Heat, W/Label	1
9	54396	(006000-006999)	Screw, Hex, .31-18 X 0.75, 5	1
10	32491	(006000-006999)	Washer, Flat, .31 Std	1
11	79381	(006000-006999)	Clamp, Hose, Wormdrive, 1.25-2.00d	1
12	53468	(006000-006999)	Clamp, Cable, Stl, 1.75d X 1.00w, 1h	1
13	54911-32	(006000-006999)	Fitting, Draincock, .25npt	1

Fig. 62 - Engine Radiator Hose Group (007000-)

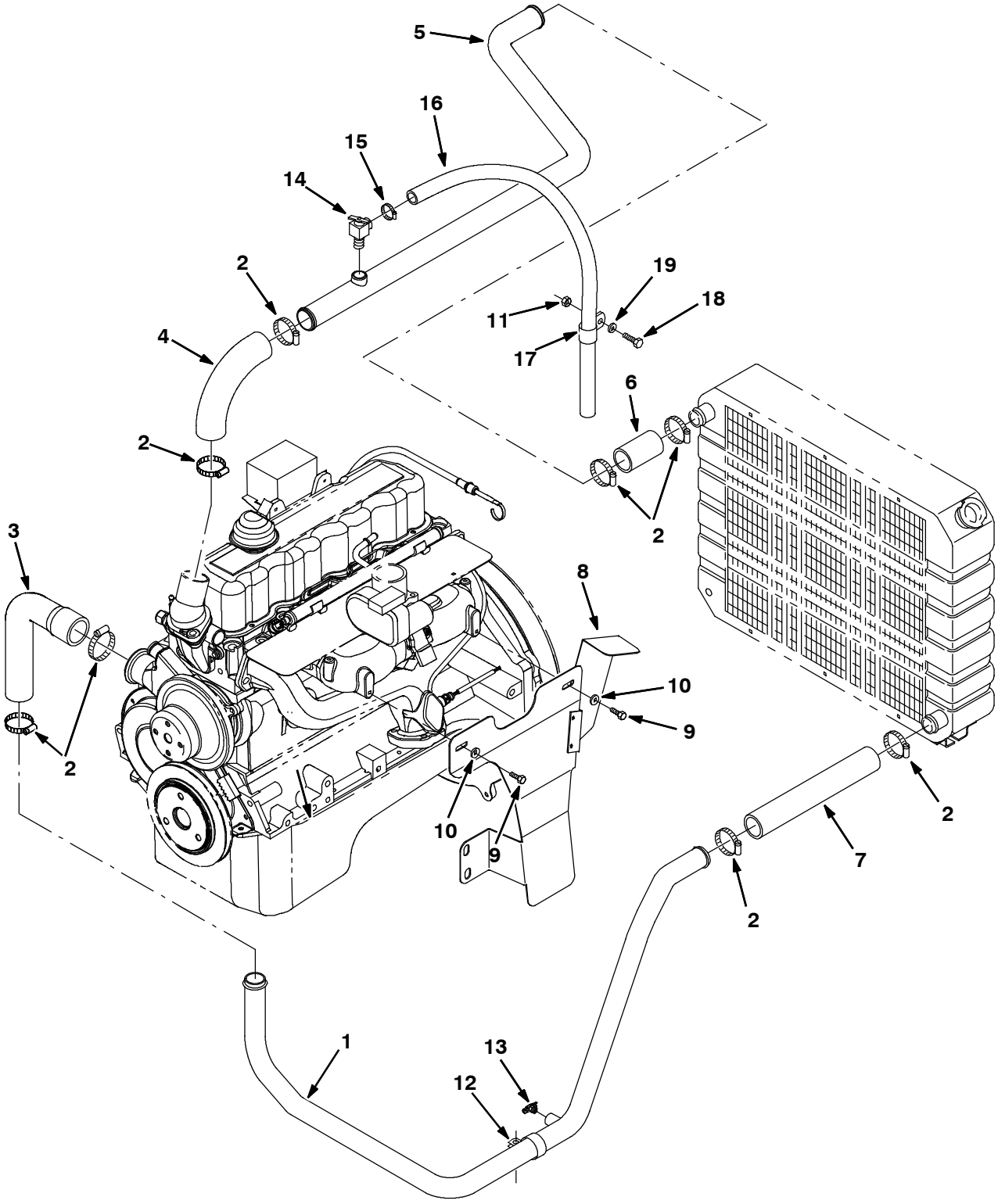

353875 - G, LP

Fig. 62 - Engine Radiator Hose Group (007000-)

Ref.	Part No.	Serial Number	Description	Qty.
1	392590	(007000-)	Tube, Coolant, 1.5d W/.25npt Low, G/Lpg	1
2	11531	(007000-)	Clamp, Hose, Wormdrive, 1.06- 2.00d	8
3	392647	(007000-)	Hose, Coolant, 1.50id To 1.75id, Mold	1
4	380748	(007000-)	Hose, Rbr, E90, 1.50id 1.50id 06.3 04.5	1
5	1030189	(007000-)	Tube, Radiator, Upper [800gas/Lpg]	1
6	74944	(007000-)	Hose, Rbr, 1.50id 1.88od 04.0l	1
7	70635	(007000-)	Hose, Rbr, 1.50id 1.88od 12.0l	1
8	1029737	(007000-)	Shield Wldt, Heat, Manifold	1
9	06941	(007000-)	Screw, Hex, M6 X 1.0 X 10, 8.8	2
10	32483	(007000-)	Washer, Flat, 0.25, Sae	2
11	08708	(007000-)	Nut, Hex, Lock, M6 X 1.00, Nl	1
12	53468	(007000-)	Clamp, Cable, Stl, 1.75d X 1.00w, 1hole	1
13	54911- 32	(007000-)	Fitting, Draincock, .25npt	1
14	51305	(007000-)	Fitting, Draincock, E90, .25npt	1
15	43844	(007000-)	Clamp, Hose, Wormdrive, 0.25- 0.62d, .31w	1
16	41295	(007000-)	Hose, Pvc, Clr, 0.38id 0.56od 048.0l	1
17	62234	(007000-)	Handle, Valve, Cntrl	1
18	06944	(007000-)	Screw, Hex, M6 X 1.0 X 25, 8.8	1
19	32483	(007000-)	Washer, Flat, 0.25, Sae	1

Fig. 63 - Engine Radiator and Cooling Fan Group (004000-006308)

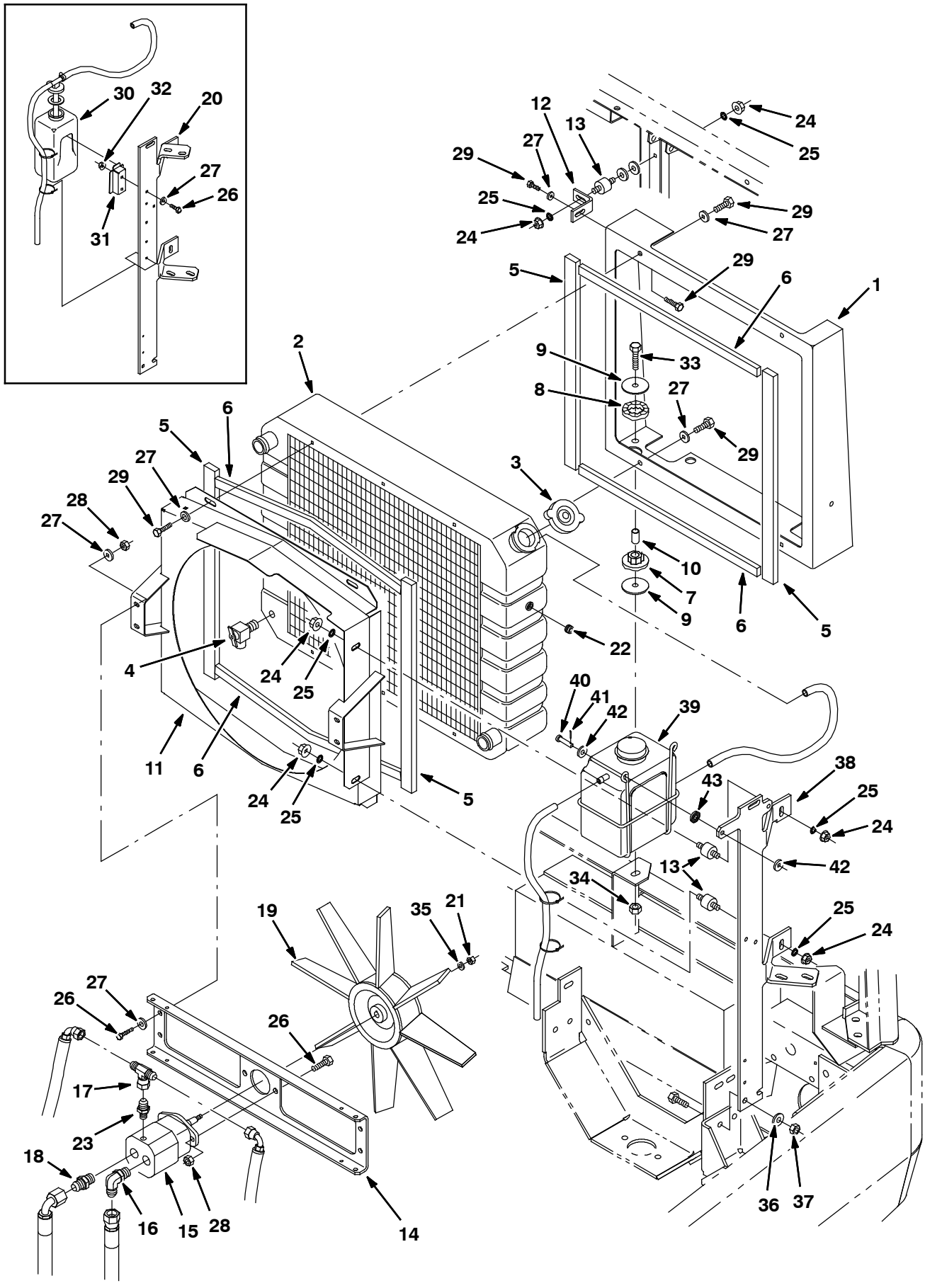

350681 - NA, ALL

Fig. 63 - Engine Radiator and Cooling Fan Group (004000-006308)

	Ref.	Part No.	Serial Number	Description	Qty.
	1	48056	(004000-006308)	Duct, Rear	1
	2	1041739AM	(004000-006308)	Radiator	1
	3	1045764	(004000-006308)	Cap, Radiator, 14psi [Stant]	1
	4	51305	(004000-006308)	Drain Cock,.25Npt Wh#120 Angl	1
	5	63818	(004000-006308)	Seal, Duct	4
	6	374230	(004000-006308)	Seal, Ure, 0.38 0.75w 19.5l Adh	4
	7	64621	(004000-006308)	Bushing, Isolator	2
	8	64618	(004000-006308)	Ring, Isolator, Outer Rbr	2
	9	58228	(004000-006308)	Washer, Flat, 0.44b 2.00d .12, Stl, Pl	4
	10	77452	(004000-006308)	Spacer	2
	11	9001070	(004000-006308)	Shroud, Fan, Radiator, W/ Label [800l]	1
	12	375511	(004000-006308)	Bracket, L, 2.20,2.00, .18T,1.	1
	13	51322	(004000-006308)	Isolator-Vibration .31-18	3
	14	1019188	(004000-006308)	Channel, Mtg, Fan Motor	1
▽	15	63542	(004000-006308)	Motor-Hyd, Gear In 10.0 (See Breakdowns)	1
▲		00960	(004000-006308)	Key, Sq, 0.12 X 0.12, 0.50l	1
	16	47512	(004000-006308)	Ftg-Hyd E90 Jm06/Om08	1
	17	35586	(004000-004936)	Fitting, Hyd, Tee, Jf06/Jm06/Jm06, Br	1
	18	52402	(004000-006308)	Ftg-Hyd Str Jm06/Om08	1
	19	375586	(004000-006308)	Fan, Radiator	1
	20	380754	(004000-006183)	Bracket, Mtg, Fltr, Oil, W/ Label [800l]	1
	21	74082	(004000-006308)	Nut-Hxlocnyln .31-24 Reg Pltd	1
	22	02247	(004495-006308)	Fitting, Plug	1
	23	50960	(004937-006308)	Fitting, Hyd, Str, Jm06/Om04	1
	24	19313	(004000-006308)	Nut, Hex, Std, .31-18	6
	25	32984	(004000-006308)	Washer, Lock, Int, 0.31	6
	26	39277	(004000-006308)	Screw, Hex, M8 X 1.25 X 25, 8.8	8
	27	32491	(004000-006308)	Washer, Flat, 0.31 Std	14
	28	08709	(004000-006308)	Nut, Hex, Lock, M8 X 1.25, Nl	7
	29	16931	(004000-006308)	Screw, Hex, M8 X 1.25 X 20, 8.8	9
	30	87972	(004000-006183)	Tank, Coolant, 03.5 03.0 06.5deep 1.0 Qt	1
	31	382507	(004000-006183)	Bracket, Mtg, Tank, Coolant F/87972	1
	32	07790	(004000-006308)	Nut, Hex, Flng, M6 X 1.0	2
	33	27990	(004000-006308)	Screw, Hex, .38-16 X 2.00, 5	2
	34	50902	(004000-006308)	Nut, Hex, Lock, .38-16, Nl	2
	35	41186	(004000-006308)	Washer, Belleville, .31	1
	36	32492	(004000-006308)	Washer, Flat, 0.38 Std	2
	37	41430	(004000-006308)	Nut, Hex, Lock, M10 X 1.5, Nl	2
	38	9001183	(004000-006308)	Bracket, Mtg, Fltr, Oil, W/Label [800l]	1
	39	768897	(004000-006308)	Tank, Coolant, 06.0 04.5 06.9deep 2.5 Qt	1
	40	46800	(004000-006308)	Pin, Clevis, 0.31 D X 0.75l	2
	41	44906	(004000-006308)	Pin, Hair Cotter, 0.69 D .092 Wir	2
	42	32490	(004000-006308)	Washer, Flat, 0.25 Std	4
	43	63416	(004000-006308)	Washer, Rbr, .12 0.31b 0.88d	2

Fig. 64 - Engine Radiator and Cooling Fan Group (006309-006999)

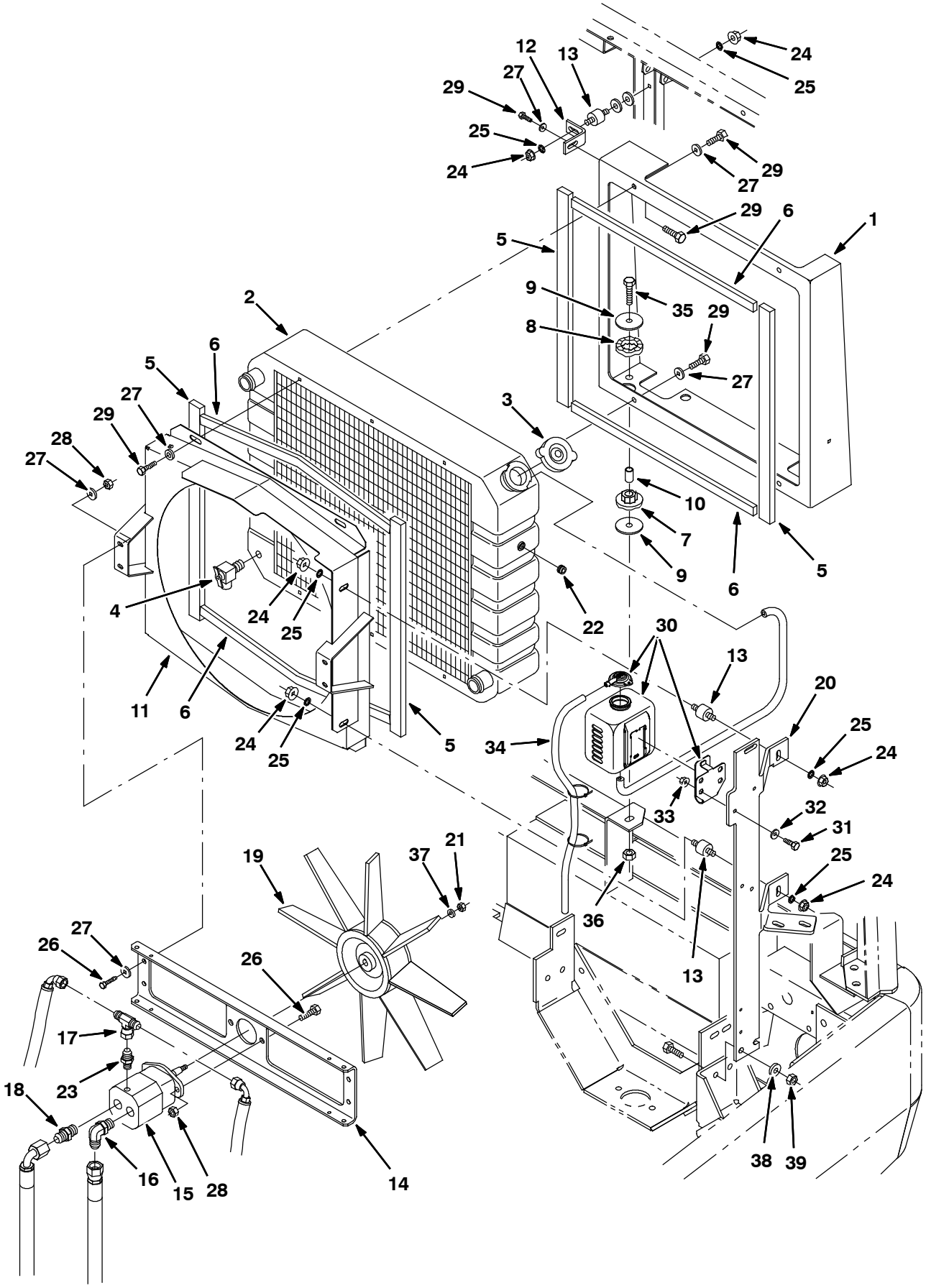

350681 - NA, ALL

Fig. 64 - Engine Radiator and Cooling Fan Group (006309-006999)

	Ref.	Part No.	Serial Number	Description	Qty.
	1	48056	(006309-006999)	Duct, Rear	1
	2	1041739AM	(006309-006999)	Radiator	1
	3	1045764	(006309-006999)	Cap, Radiator, 14psi [Stant]	1
	4	51305	(006309-006999)	Drain Cock,.25Npt Wh#120 Angl	1
	5	63818	(006309-006999)	Seal, Duct	4
	6	374230	(006309-006999)	Seal, Ure, 0.38 0.75w 19.5l Adh	4
	7	64621	(006309-006999)	Bushing, Isolator	2
	8	64618	(006309-006999)	Ring, Isolator, Outer Rbr	2
	9	58228	(006309-006999)	Washer, Flat, 0.44b 2.00d .12, Stl, Pl	4
	10	77452	(006309-006999)	Spacer	2
	11	9001070	(006309-006999)	Shroud, Fan, Radiator, W/ Label [800l]	1
	12	375511	(006309-006999)	Bracket, L, 2.20,2.00, .18T,1.	1
	13	51322	(006309-006999)	Isolator-Vibration .31-18	3
	14	1019188	(006309-006999)	Channel, Mtg, Fan Motor	1
▽	15	63542	(006309-006999)	Motor-Hyd, Gear In 10.0 (See Breakdowns)	1
▲		00960	(006309-006999)	Key, Sq, 0.12 X 0.12, 0.50l	1
	16	47512	(006309-006999)	Ftg-Hyd E90 Jm06/Om08	1
	17	35586	(006309-006999)	Fitting, Hyd, Tee, Jf06/Jm06/Jm06, Br	1
	18	52402	(006309-006999)	Ftg-Hyd Str Jm06/Om08	1
	19	375586	(006309-006999)	Fan, Radiator	1
	20	9001554	(006309-006999)	Bracket, Mtg, Fltr, Oil, W/Label [800l]	1
	21	74082	(006309-006999)	Nut-Hxlocnyln .31-24 Reg Pltd	1
	22	02247	(006309-006999)	Fitting, Plug	1
	23	50960	(006309-006999)	Fitting, Hyd, Str, Jm06/Om04	1
	24	19313	(006309-006999)	Nut, Hex, Std, .31-18	6
	25	32984	(006309-006999)	Washer, Lock, Int, 0.31	6
	26	39277	(006309-006999)	Screw, Hex, M8 X 1.25 X 25, 8.8	8
	27	32491	(006309-006999)	Washer, Flat, 0.31 Std	14
	28	08709	(006309-006999)	Nut, Hex, Lock, M8 X 1.25, Nl	7
	29	16931	(006309-006999)	Screw, Hex, M8 X 1.25 X 20, 8.8	9
	30	1023853	(006309-006999)	Tank, Coolant, 04.7 03.3 4.7deep, 1liter	1
	31	06943	(006309-006999)	Screw, Hex, M6 X 1.0 X 20, 8.8	2
	32	19066	(006309-006999)	Washer, Flat, #10	2
	33	07790	(006309-006999)	Nut, Hex, Flng, M6 X 1.0	2
	34	381391	(006309-006999)	Hose, Drain, Overflow, Radiator	1
	35	27990	(006309-006999)	Screw, Hex, .38-16 X 2.00, 5	2
	36	50902	(006309-006999)	Nut, Hex, Lock, .38-16, Nl	2
	37	41186	(006309-006999)	Washer, Belleville, .31	1
	38	32492	(006309-006999)	Washer, Flat, 0.38 Std	2
	39	41430	(006309-006999)	Nut, Hex, Lock, M10 X 1.5, Nl	2

Fig. 65 - Engine Radiator and Cooling Fan Group (007000-)

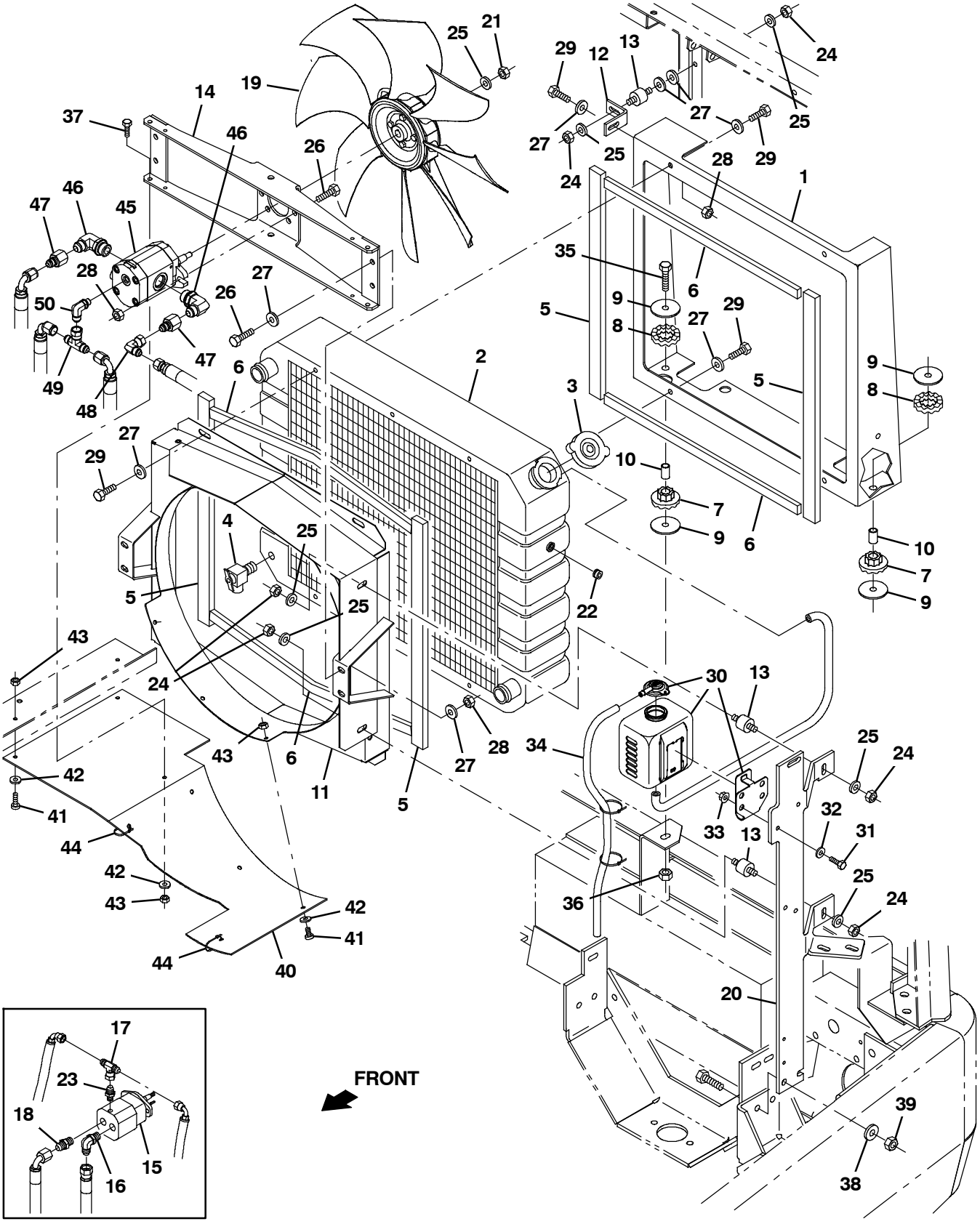

350681 - NA, ALL

Fig. 65 - Engine Radiator and Cooling Fan Group (007000-)

	Ref.	Part No.	Serial Number	Description	Qty.
	1	48056	(007000-)	Duct, Rear	1
	2	1041739AM	(007000-)	Radiator	1
	3	1045764	(007000-)	Cap, Radiator, 14psi [Stant]	1
	4	51305	(007000-)	Drain Cock,.25Npt Wh#120 Angl	1
	5	63818	(007000-)	Seal, Duct	4
	6	374230	(007000-)	Seal, Ure, 0.38 0.75w 19.5l Adh	4
	7	64621	(007000-)	Bushing, Isolator	2
	8	64618	(007000-)	Ring, Isolator, Outer Rbr	2
	9	58228	(007000-)	Washer, Flat, 0.44b 2.00d .12, Stl, Pl	4
	10	77452	(007000-)	Spacer	2
	11	9006741	(007000- 007400)	Shroud Kit, Fan, Radiator [800/810]	1
	11	1056213	(007401-)	Shroud Wldt, Fan, Radiator [800/810]	1
	12	375511	(007000-)	Bracket, L, 2.20,2.00, .18T,1.	1
	13	51322	(007000-)	Isolator- Vibration .31- 18	3
	14	1033344	(007000- 007400)	Bracket Wldt, Mtg, Motor [2007]	1
	14	1051599	(007401-)	Bracket Wldt, Mtg, Motor	1
▽	15	63542	(007000- 008108)	Motor- Hyd, Gear In 10.0 (See Breakdowns)	1
▲		00960	(007000- 008108)	Key, Sq, 0.12 X 0.12, 0.50l	1
	16	47512	(007000- 008108)	Ftg- Hyd E90 Jm06/Om08	1
	17	35586	(007000- 008108)	Fitting, Hyd, Tee, Jf06/Jm06/Jm06, Br	1
	18	52402	(007000- 008108)	Ftg- Hyd Str Jm06/Om08	1
	19	1033497	(007000-)	Fan, Cooling, 18.0d, 8 Blade, 0.5b Taper	1
	20	9001554	(007000-)	Bracket, Mtg, Fltr, Oil, W/Label [800l]	1
	21	74082	(007000- 008108)	Nut- Hxlocnyln .31- 24 Reg Pltd	1
	21	08165	(008109-)	Nut, Hex, Stover, M8	1
	22	02247	(007000-)	Fitting, Plug	1
	23	50960	(007000- 008108)	Fitting, Hyd, Str, Jm06/Om04	1
	24	19313	(007000-)	Nut, Hex, Std, .31- 18	6
	25	41186	(007000-)	Washer, Belleville, .31	7
	26	39277	(007000-)	Screw, Hex, M8 X 1.25 X 25, 8.8	8
	27	32491	(007000-)	Washer, Flat, 0.31 Std	14
	28	08709	(007000-)	Nut, Hex, Lock, M8 X 1.25, Nl	7
	29	16931	(007000-)	Screw, Hex, M8 X 1.25 X 20, 8.8	9
	30	1023853	(007000-)	Tank, Coolant, 04.7 03.3 4.7deep, 1liter	1
	31	06943	(007000-)	Screw, Hex, M6 X 1.0 X 20, 8.8	2
	32	19066	(007000-)	Washer, Flat, #10	2
	33	07790	(007000-)	Nut, Hex, Flng, M6 X 1.0	2
	34	381391	(007000-)	Hose, Drain, Overflow, Radiator	1
	35	27990	(007000-)	Screw, Hex, .38- 16 X 2.00, 5	2
	36	50902	(007000-)	Nut, Hex, Lock, .38- 16, Nl	2
	37	06943	(007401-)	Screw, Hex, M6 X 1.00 X 20, 8.8	1
	38	32492	(007000-)	Washer, Flat, 0.38 Std	2
	39	41430	(007000-)	Nut, Hex, Lock, M10 X 1.5, Nl	2
	40	1055893	(007401-)	Skirt, Cooling Fan [800/810]	1
	41	09145	(007401-)	Screw, Pan, Phl, M6 X 1.00 X 16, 4.8	5
	42	32490	(007401-)	Washer, Flat, 0.25, Std	6
	43	08708	(007401-)	Nut, Hex, Lock, M6 X 1.00, Nl	6
	44	763114	(007401-)	Tie, Cable, 11.3l, 2.75d Max	2
	45	1071254	(008109-)	Motor, Hyd, Gear, Int 07.6 Bi- Dir 3000	1
	46	56821	(008109-)	Fitting, Hyd, E90, Jm08/Om10	2
	47	47753	(008109-)	Fitting, Hyd, Str, Jf08/Jm06	2
	48	47504	(008109-)	Fitting, Hyd, E90, Jf06/Jm06	1
	49	35586	(008109-)	Fitting, Hyd, Tee, Jf06/Jm06/Jm06, Br	1
	50	77098	(008109-)	Fitting, Hyd, E90, Jm06/Om04	1

Fig. 66 - Engine Battery Group (006000-006999)

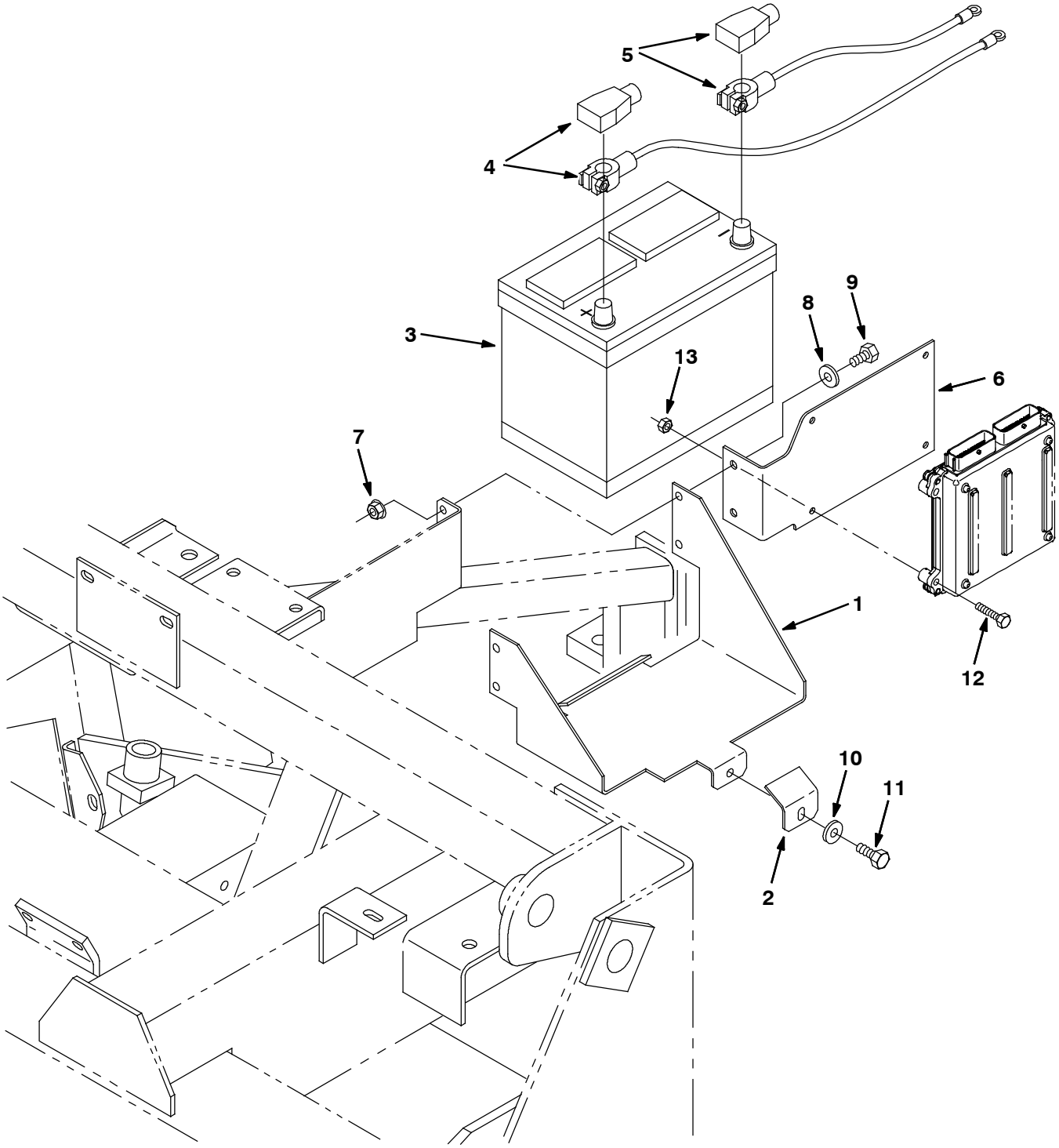

09819 - G, LP

Fig. 66 - Engine Battery Group (004000-006999)

Ref.	Part No.	Serial Number	Description	Qty.
1	77490	(004000-006999)	Bracket, Mtg, Battery	1
2	77579	(004000-006999)	Bracket, Battery	1
3	77602	(004000-006999)	Battery, 12V, Wet	1
4	68869	(004000-006999)	Cable Assy-Batt,Pos, 48.0, 2Ga	1
5	60293	(004000-006999)	Wire, 42.0 Lg, 2Ga, Neg	1
6	1011655	(006000-006999)	Bracket, Eng	1
7	07791	(006000-006999)	Nut, Hex, Flng, M8 X 1.25	2
8	32491	(006000-006999)	Washer, Flat, 0.31 Std	2
9	16931	(006000-006999)	Screw, Hex, M8 X 1.25 X 20, 8.8	2
10	41186	(006000-006999)	Washer, Belleville, .31	1
11	39277	(006000-006999)	Screw, Hex, M8 X 1.25 X 25, 8.8	1
12	06946	(006000-006999)	Screw, Hex, M6 X 1.0 X 35, 8.8	4
13	08708	(006000-006999)	Nut, Hex, Lock, M 6 X 1.0, Nl	4

Fig. 67 - Engine Battery Group (007000-)

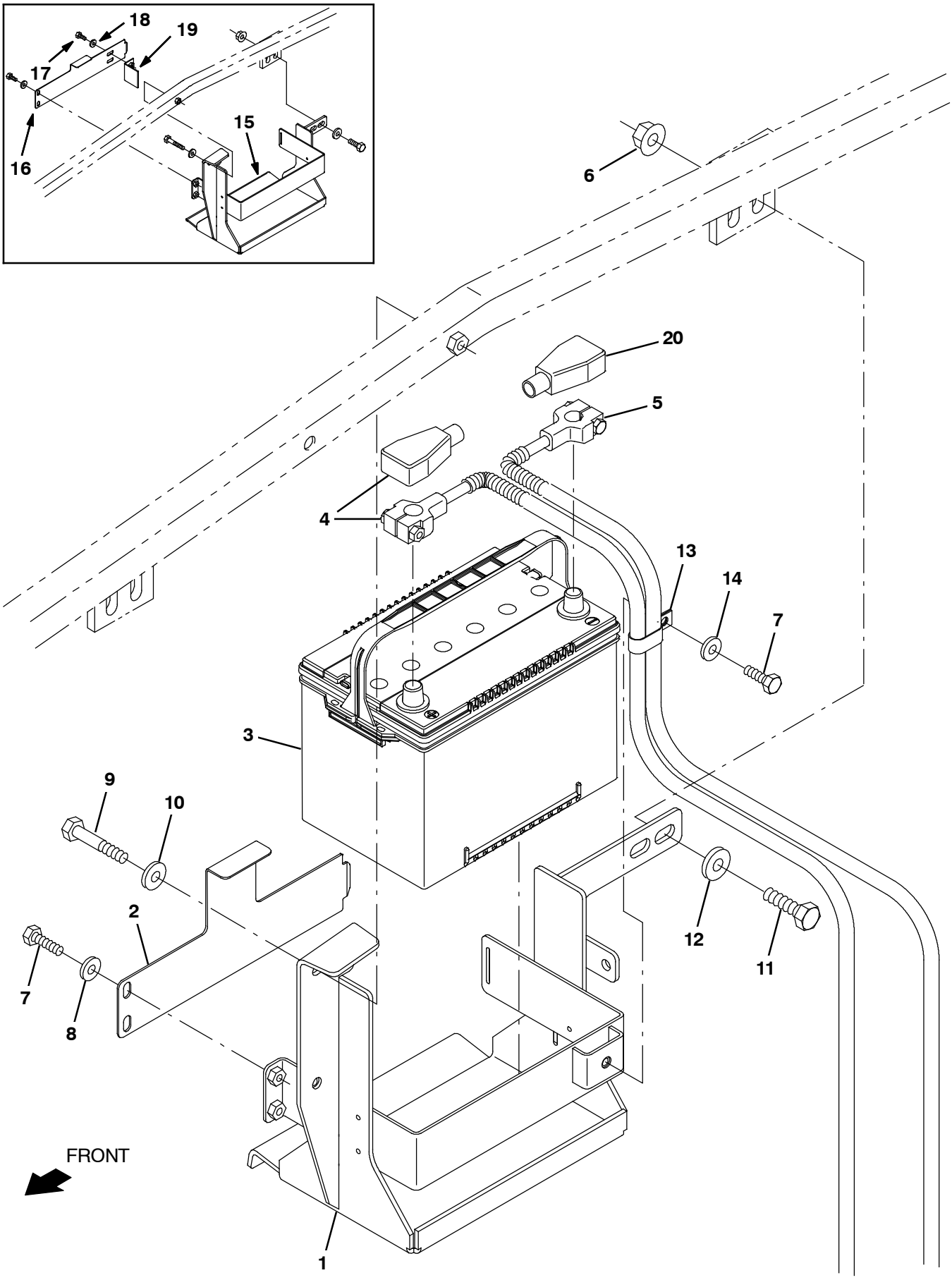

354090 - NA, G/LP

Fig. 67 - Engine Battery Group (007000-)

Ref.	Part No.	Serial Number	Description	Qty.
1	1073034	(008015-)	Bracket Wldt, Mtg, Battery [800 G/Lp/D]	1
2	1073030	(008015-)	Bracket, Retainer, Battery [800 G/Lp/D]	1
3	1073553	(007000-)	Battery, Wet, 12vdc 1000cca	1
4	68869	(007000-)	Cable, Battery, 02ga 48.0l Red .41ring	1
5	34821	(007000-)	Cable, Battery, 02ga 36.0l Blk .38ring	1
6	07793	(007000-)	Nut, Hex, Flng, M12 X 1.75	2
7	16931	(007000-)	Screw, Hex, M8 X 1.25 X 20, 8.8	3
8	41186	(007000-)	Washer, Flat, Belleville, .31	2
9	06963	(007000-)	Screw, Hex, M10 X 1.5 X 60, 8.8	2
10	32492	(007000-)	Washer, Flat, 0.38, Std	2
11	06969	(007000-)	Screw, Hex, M12 X 1.75 X 40, 8.8	2
12	32486	(007000-)	Washer, Flat, 0.50, Sae	2
13	67366	(008015-)	Clamp, Cable, Stl, 1.0x2.0x0.62w, 1hole	1
14	32491	(008015-)	Washer, Flat, 0.31, Std	1
15	1012785	(007000- 008014)	Bracket Wldt, Mtg, Battery	1
16	1011788	(007000- 008014)	Bracket, Retainer, Battery	1
17	16931	(007000- 008014)	Screw, Hex, M8 X 1.25 X 20, 8.8	2
18	41186	(007000- 008014)	Washer, Flat, Belleville, .31	2
19	1011795	(007000- 008014)	Bracket, Retainer, Battery	1
20	68872	(007000-)	Boot, Terminal, Battery, 02- 01ga, Blk	1

Fig. 68 - Wheel Group, Rear Drive

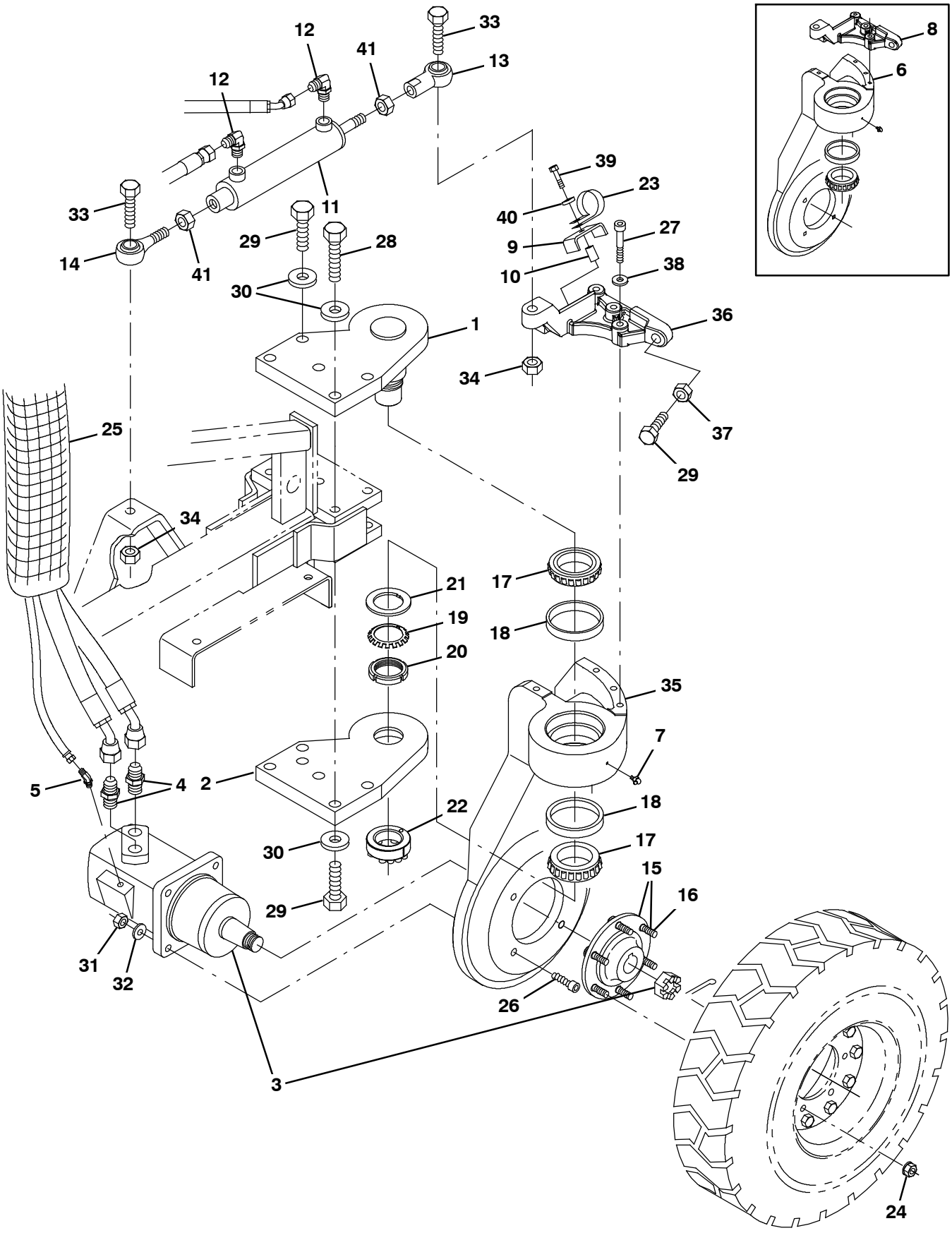

07567 - ALL

Fig. 68 - Wheel Group, Rear Drive

	Ref.	Part No.	Serial Number	Description	Qty.
	1	63491	(004000-)	Pivot Wldt, Wheel	1
	2	63471	(004000-)	Plate, Pivot, Wheel	1
	3	63426	(004000- 004206)	Motor- Hyd Gear In (See Breakdowns)	1
	3	22626	(004207- 004936)	Motor- Hyd Gear (See Breakdowns)	1
	3	373464	(004937- 007697)	Motor- Hyd Gear (See Breakdowns) (Replaced by 1068905)	1
▽	3	1068905	(007698-)	Motor, Hyd, Gear, Int 29.9 Bi- Dir 3000	1
▲		9013665	(007698-)	Seal Kit, Front, Shaft	1
	4	9008645	(004000- 007467)	Hose Kit, Rear Drive, Replmt	1
	4	79872	(007468-)	Fitting, Hyd, Str, Fm12/Om16	2
	5	34359	(004000- 004936)	Ftg- Hyd E45 Jm04/Om04	1
	5	47522	(004937-)	Fitting, Hyd, E45, Jm06/Om06	1
	6	63540	(004000- 004033)	Housing, Sppt, Wheel (Repl. by 375534)	1
	6	21740	(004034- 007529)	House, Wheel	1
	7	09718	(004000-)	Ftg, Grease.25- 28Th 90 .75L	1
	8	63543	(004000- 004033)	Bracket, Steering, Machining (Replaced by 375534)	1
	8	375575	(004034- 007529)	Bracket, Steering, Machining	1
	9	73733	(004000-)	Channel, Retainer	1
	10	73731	(004000-)	Sleeve, .375B .62D1.06 Stl	1
	11	53601	(004000- 006460)	Cylinder, Hyd, 2.0b,15.0l, (Replaced by1028492) (See Breakdowns)	1
	11	1028492	(006461-)	Cylinder, Hyd, 2.0b 15.0l 08.00strk 1500	1
	12	56820	(004000-)	Ftg- Hyd E90 Jm06/Om06	2
	13	64887	(004000-)	Balljoint, Rod End	1
	14	64886	(004000-)	Balljoint, Rod End	1
▽	15	79140	(004000-)	Hub and Stud Assy.	1
▲	16	79152	(004000-)	Stud, Wheel .56- 18x2.13	6
	17	51341	(004000-)	Bearing- Cone, 2.63Bore 0.87Wth	2
	18	51340	(004000-)	Bearing- Cup , 4.33Dia 0.74Wth	2
	19	369701	(004000-)	Washer,Lock Special	1
	20	41073	(004000-)	Nut,Lock- Special 2.16- 18Uns	1
	21	375762	(004000-)	Washer	1
	22	63496	(004000-)	Ring, Retainer, Lock	1
	23	67767	(004000-)	Clamp, Cable	1
	24	79153	(004000-)	Nut, Wheel Lug	6
	25	82832	(004000-)	Sleeve, Nyl, 37, 25.0l	1
	26	39305	(004000-)	Scr- soc .50- 13x2.75 Alloypltd	4
	27	375576	(004000-)	Scr- soc M12x1.75 60	4
	28	06995	(004000-)	Screw, Hex, M20 X 2.5 X 70, 8.8	3
	29	06993	(004000-)	Screw, Hex, M20 X 2.5 X 60, 8.8	7
	30	39350	(004000-)	Washer, Flat, 0.75, Sae	10
	31	32985	(004000-)	Nut, Hex, Lock, .50- 13, Nl	4
	32	32486	(004000-)	Washer, Flat, 0.50, Sae	4
	33	54833	(004000-)	Screw, Hex, .75- 10 X 2.50, G5	2
	34	32987	(004000-)	Nut, Hex, Lock, .75- 10, Nl	2
	35	1071056	(007530-)	Housing, Sppt, Wheel, Rear	1
	36	1053585	(007530-)	Bracket, Arm, Steering	1
	37	07783	(004000-)	Nut, Hex, Std, M20 X 2.50, 8	1
	38	39346	(004000-)	Washer, Flat, 0.44, Std	4
	39	39278	(004000-)	Screw, Hex, M8 X 1.25 X 50, 8.8	1
	40	32491	(004000-)	Washer, Flat, 0.31, Std	1
	41	43958	(004000-)	Nut, Hex, Std, .75- 16	2

Fig. 69 - Wheels and Brakes Group, Front

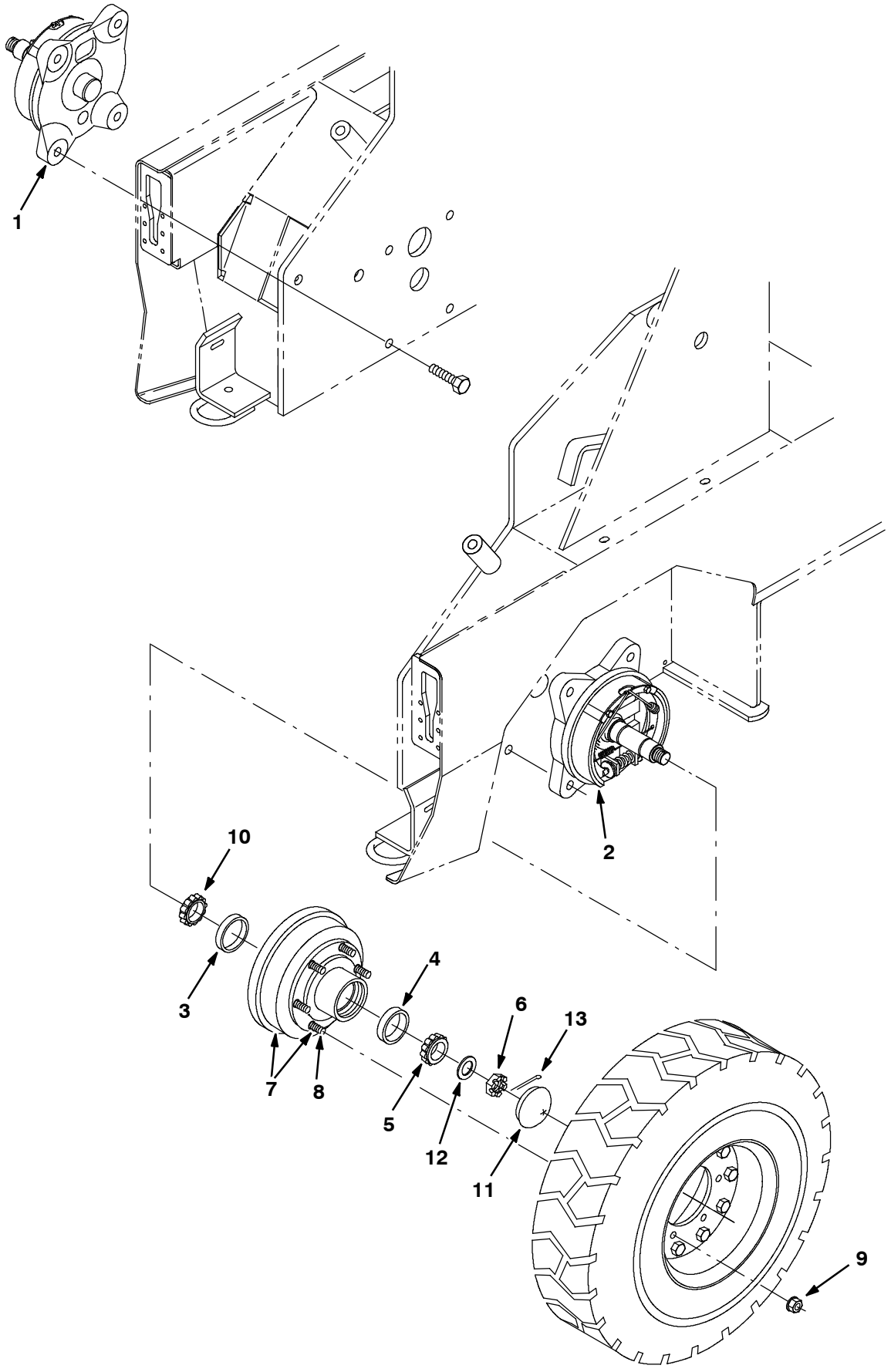

07568 - ALL

Fig. 69 - Wheels and Brakes Group, Front

	Ref.	Part No.	Serial Number		Description	Qty.
	1	77790	(004000-	)	Brake Assy, Rh (See Breakdowns)	1
	2	77770	(004000-	)	Brake Assy, Lh (See Breakdowns)	1
	3	17808	(004000-	)	Bearing- Cup, 2.72Dia 0.59Wth	2
	4	51338	(004000-	)	Bearing- Cup, 2.56Dia 0.55Wth	2
	5	51193	(004000-	)	Bearing- Cone, 1.38Bore 0.72Wth	2
	6	14242	(004000-	)	Nut- Hxslot 1.00- 20 Pltd	2
▽	7	79151	(004000-	)	Drum Assy, Brake 9/16	2
▲	8	79152	(004000-	)	Stud, Wheel .56- 18x2.13	6
	9	79153	(004000-	)	Nut, Wheel Lug, 9/16- 18	12
	10	17809	(004000-	)	Bearing- Cone, 1.50Bore 0.75Wth	2
	11	51373	(004000-	)	Cap, Grease Black Paint	2
	12	32598	(004000-	)	Washer, Flat, 1.02b 1.75d .12, Stl	2
	13	08180	(004000-	)	Pin, Cotter, .125 X 2.00	2

Fig. 70 - Wheel Assembly

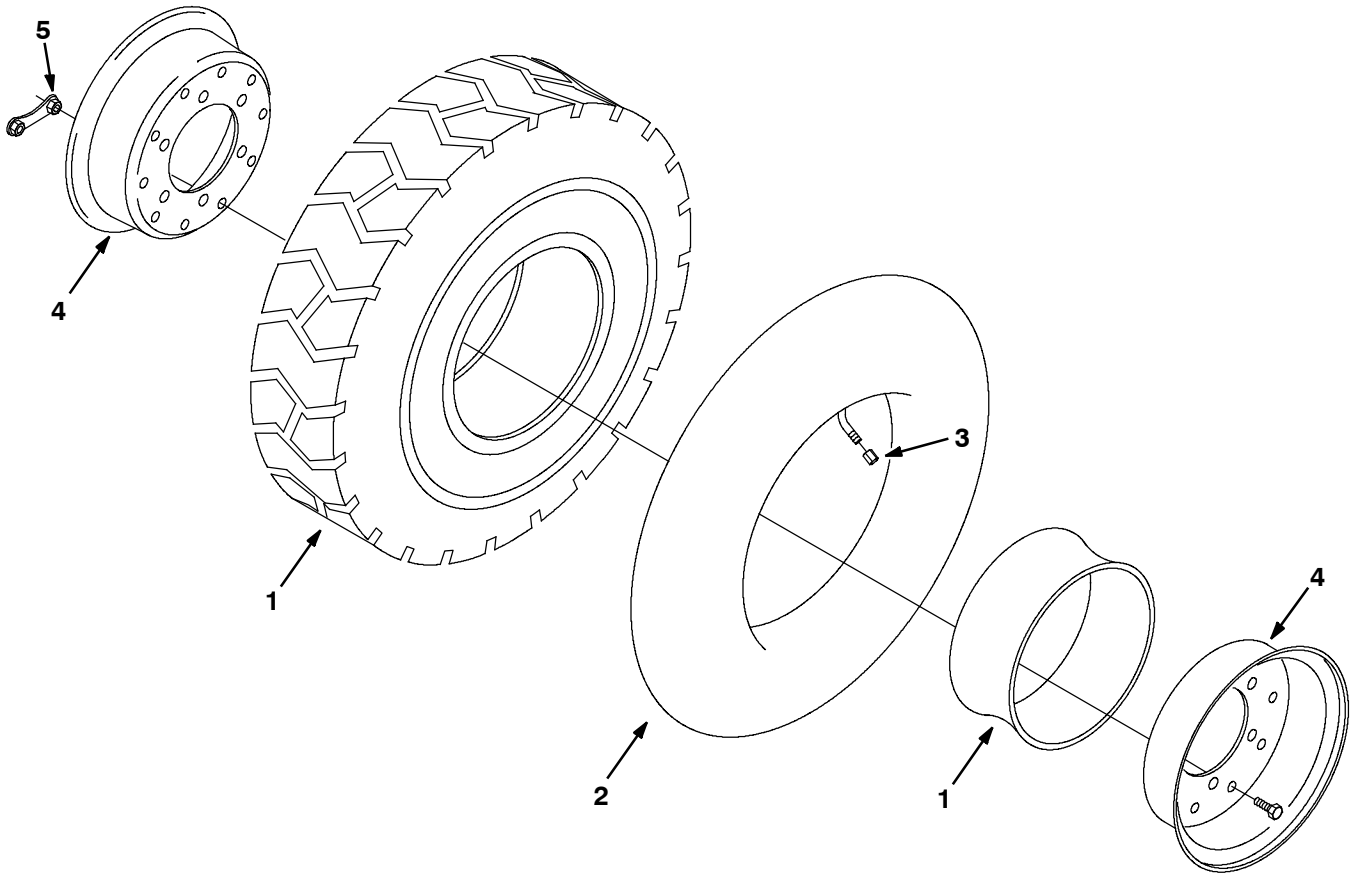

07621 - ALL

Fig. 70 - Wheel Assembly

	Ref.	Part No.	Serial Number		Description	Qty.
▽		1064126	(004000-	)	Tire & Rim Assy, Pneu 6.50- 10	3
▲	1	1064125	(004000-	)	Tire & Flap Assy	1
▲	2	64058	(004000-	)	Tube, Inner	1
▲	3	45786	(004000-	)	Cap, Valve Stem	1
▲	4	21672	(004000-	)	Hub Assy	1
	5	21259	(004000-	)	Plate Wldt, Wheel Lock (CE Only)	6

Fig. 71 - Brake Pedals Group

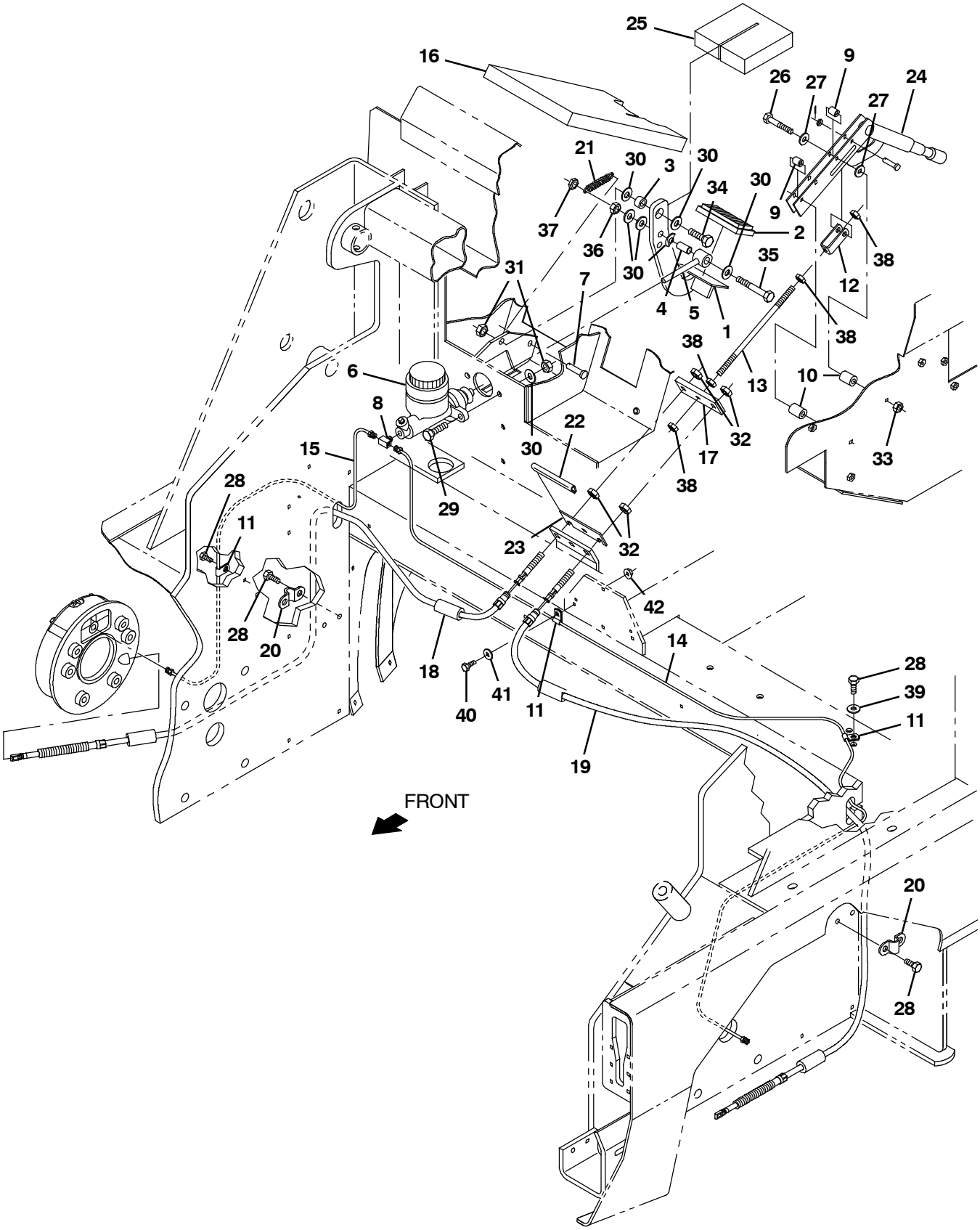

07602 - G, LP

Fig. 71 - Brake Pedals Group

	Ref.	Part No.	Serial Number	Description	Qty.
	1	63295	(004000- 008088)	Pedal Wldt	1
	1	1073812	(008089-)	Pedal Wldt, Brake [800 Gray]	1
	2	51109	(004000-)	Pad	1
	3	64635	(004000-)	Spacer	1
	4	57311	(004000-)	Spacer- .50 Od X .055W X 1.0	1
	5	70550	(004000-)	Rod Wldt, Push, Brake	1
▽	6	64950	(004000-)	Cylinder, Master Brake	1
▲		374240	(004000-)	Cap, Cyl Assy, Master Brake	1
	7	76653	(004000-)	Pin, Clevis .375D X 1.000 Lg	1
	8	51483	(004000-)	Ftg,Brass,Tee 06lf- 02Pm- 06lf	1
	9	51562	(004000-)	Sleeve, .344B .50D .81 Cr.Anc	2
	10	86034	(004000-)	Spacer, Brake	2
	11	46236	(004000-)	Clamp- Cable, 0.25Dia 0.56Wth	4
	12	76491	(004000-)	Bracket, Adjuster, Brake	1
	13	76490	(004000-)	Rod- Thread, 2End M08X1.25X10Lg	1
	14	79593	(004000-)	Tube Assy, Brake	1
	15	79594	(004000-)	Tube Assy, Brake	1
	16	375526	(004000-)	Insulation, S/Foam 1.0 Seal Brake Pedal	1
	17	70506	(004000-)	Bar, Equalizer	1
	18	64556	(004000-)	Cable, Brake, Park	1
	19	64558	(004000-)	Cable, Brake, Park	1
	20	65129	(004000-)	Clamp, Cable- Brake	2
	21	75575	(004000-)	Spring, Tens,0.5Dx.06Wire 2.5L	1
	22	31775	(004000-)	Molding, Trim 11- 14Ga 4.0	1
	23	74022	(004000-)	Strip, Retainer, Brake Cable	1
	24	51545	(004000-)	Lever, Brake	1
	25	380717	(004000-)	Insulation, Sound Foam	1
	26	39279	(004000-)	Screw, Hex, M8 X 1.25 X 70, 8.8	2
	27	32491	(004000-)	Washer, Flat, 0.31 Std	4
	28	16735	(004000-)	Screw, Hex, M8 X 1.25 X 16, 8.8	4
	29	39284	(004000-)	Screw, Hex, M10 X 1.50 X 35, 8.8	2
	30	32492	(004000-)	Washer, Flat, 0.38, Std	8
	31	41430	(004000-)	Nut, Hex, Lock, M10 X 1.5, Nl	3
	32	39312	(004000-)	Nut, Hex, Std, M10 X 1.50	4
	33	08709	(004000-)	Nut, Hex, Lock, M8 X 1.25, Nl	2
	34	39285	(004000-)	Screw, Hex, M10 X 1.50 X 40, 8.8	1
	35	35706	(004000-)	Screw, Hex, .38- 16 X 2.75, G5	1
	36	50902	(004000-)	Nut, Hex, Lock, .38- 16, Nl	1
	37	36643	(004000-)	Nut, Hex, Lock, .38- 16, Nl, Thin	1
	38	39311	(004000-)	Nut, Hex, Std, M8 X 1.25	4
	39	39349	(004000-)	Washer, Flat, 0.31, Sae	1
	40	06943	(004000-)	Screw, Hex, M6 X 1.00 X 20, 8.8	1
	41	32483	(004000-)	Washer, Flat, 0.25, Sae	1
	42	07790	(004000-)	Nut, Hex, Flng, M6 X 1.00	1

Fig. 72 - Directional Pedal Group

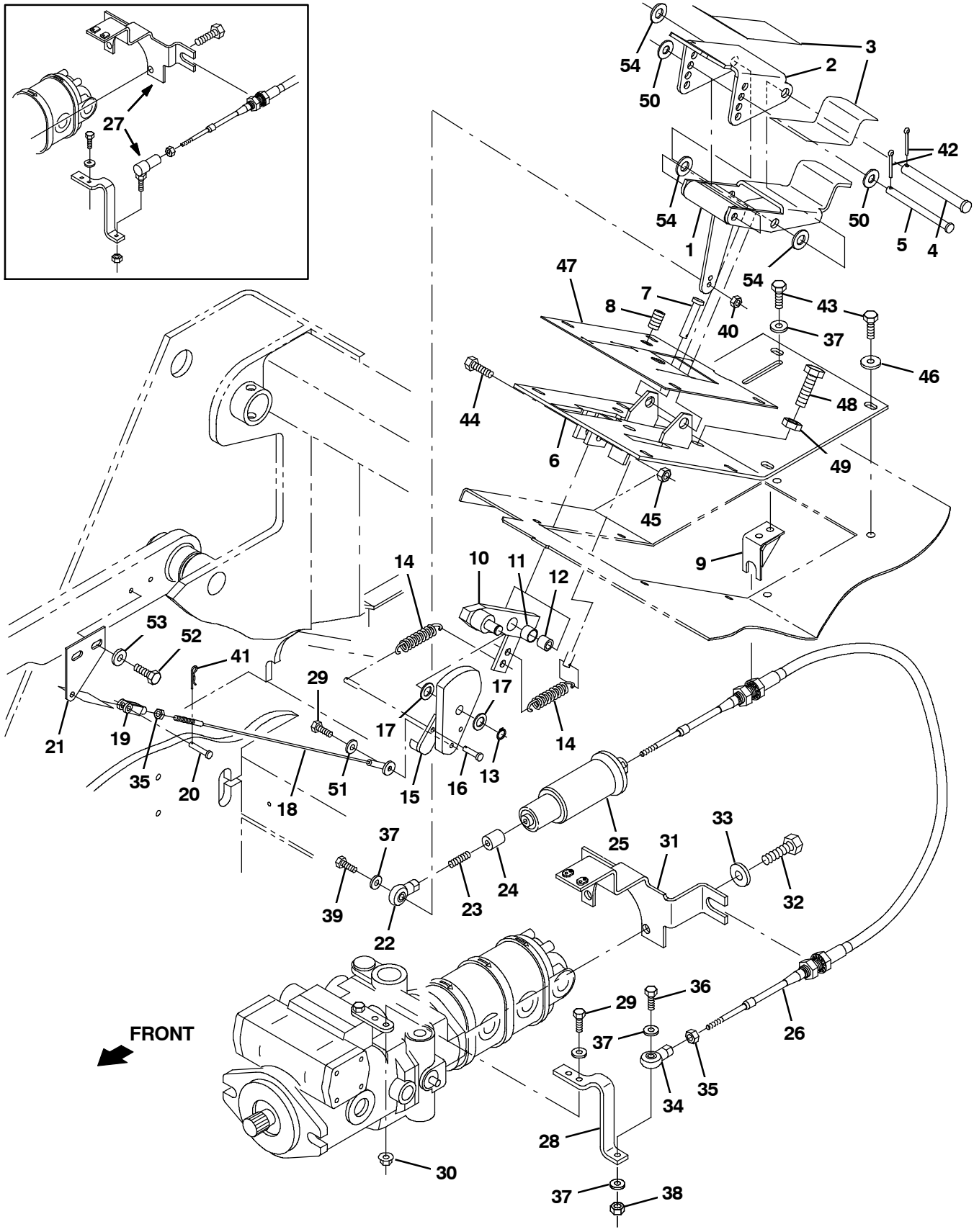

350684 - G, LP

Fig. 72 - Directional Pedal Group

Ref.	Part No.	Serial Number	Description	Qty.
1	380683	(004000- 008088)	Pedal, Propel, Lower, W/ Tread	1
1	9012874	(008089-)	Pedal, Propel, Lower, W/Tread [800 Gray]	1
2	84103	(004000- 008088)	Pedal, Propel, Upper, W/ Tread	1
2	9012859	(008089-)	Pedal, Propel, Upper, W/ Tread	1
3	82839	(004000-)	Tread, Non- Skid, 02.2w 11.5l	1
4	59668	(004000-)	Pin, Clevis, 0.50d X 4.50l	1
5	59672	(004000-)	Pin, Clevis, 0.37d X 4.50l	1
6	380566	(004000- 008088)	Panel Wldt, Access, Floor	1
6	1073847	(008089-)	Panel Wldt, Access, Floor [800 Gray]	1
7	76647	(004000-)	Pin, Clevis, 0.37d X 1.31l	1
8	76523	(004000-)	Screw, Set, Soc, M10 X 1.50 X 20	1
9	380567	(004000-)	Bracket Wldt, Mtg, Propel Cable	1
10	70747	(004000-)	Bellcrank Wldt, Pivot, Dir Cntrl	1
11	07449	(004000-)	Bushing, Sleeve, 0.62b 0.72d 0.50l, Fgl	1
12	74051	(004000-)	Tube, 0.41id 0.62od 00.5l, Stl [H/T]	1
13	86953	(004000-)	Ring, Retaining, Ext, 0.50d, Ss	1
14	54222	(004000-)	Spring, Extn, 1.00od 0.09wir 02.8l	2
15	70783	(004000-)	Cam Wldt, Limiter, Spd	1
16	82168	(004000-)	Pin, Clevis, 0.25d X 1.00l	1
17	41722	(004000-)	Washer, Flat, 0.52b 0.90d .07, Stl, Pl	2
18	70749	(004000-)	Cable, Pull, .09d 18.3l .25eye /.25- 28	1
19	14595- 1	(004000-)	Clevis, Adj, 0.25pin, 0.25- 28 Rh, Pl	1
20	14605	(004000-)	Pin, Clevis, 0.25d X 0.75l	1
21	70725	(004000-)	Plate, Limiter, Spd	1
22	68866	(004000-)	Rod- End, 0.25- 28rh Fem 0.25b [Ptfe]	1
23	1212666	(004000-)	Screw, Set, .25- 28 X 1.00, Ss	1
24	380568	(004000-)	Bar, Hex, Stl 0.63, 00.88 .25- 28	1
25	63292	(004000-)	Spring Assy, Centering, Lbs . Travel	1
26	63276	(004000-)	Cable, Push / Pull, 096.0l .25- 28/.25- 28	1
27	9001293	(004000- 004034)	Bracket Kit, Mtg, Cable, Replmt[800/810]	1
28	380514	(004000-)	Arm, Cntrl, Pintle	1
29	06943	(004000-)	Screw, Hex, M6 X 1.00 X 20, 8.8	3
30	07790	(004000-)	Nut, Hex, Flng, M6 X 1.00	2
31	1020982	(004035-)	Bracket, Mtg, Propel Cable	1
32	21198	(004000-)	Screw, Hex, .38- 16 X 1.25, G5	2
33	32485	(004000-)	Washer, Flat, 0.38, Sae	2
34	68866	(004035-)	Rod- End, 0.25- 28rh Fem 0.25b [Ptfe]	1
35	32899	(004000-)	Nut, Hex, Jam, .25- 28	2
36	25046	(004035-)	Screw, Hex, .25- 20 X 1.00, G5	1
37	32490	(004035-)	Washer, Flat, 0.25, Std	7
38	41169	(004035-)	Nut, Hex, Lock, .25- 20, Nl, Ss	1
39	07805	(004000-)	Screw, Hex, M6 X 1.00 X 35, Ss	1
40	08712	(004000-)	Nut, Hex, Lock, M6 X 1.00, Nl, Ss	1
41	08085	(004000-)	Pin, Cotter, Hair, 0.31d .058 Wir	1
42	08346	(004000-)	Pin, Cotter, .125 X 0.75	2
43	12273	(004000-)	Screw, Hex, M8 X 1.25 X 20, Nl, Ss	9
44	39285	(004000-)	Screw, Hex, M10 X 1.50 X 40, 8.8	1
45	41430	(004000-)	Nut, Hex, Lock, M10 X 1.5, Nl	1
46	1017218	(004000-)	Washer, Flat, 0.32b 1.00d .12, Ss	7
47	79116	(004000-)	Seal, Dust	1
48	06969	(004000-)	Screw, Hex, M12 X 1.75 X 40, 8.8	2
49	39313	(004000-)	Nut, Hex, Std, M12 X 1.75	2
50	32492	(004000-)	Washer, Flat, 0.38, Std	2
51	19066	(004000-)	Washer, Flat, 0.25b 0.56d .05, Pl, 10	1
52	16931	(004000-)	Screw, Hex, M8 X 1.25 X 20, 8.8	2
53	32491	(004000-)	Washer, Flat, 0.31, Std	2
54	32486	(004000-)	Washer Flat,0.50,Sae	3

Fig. 73 - Hydraulic Pumps Group

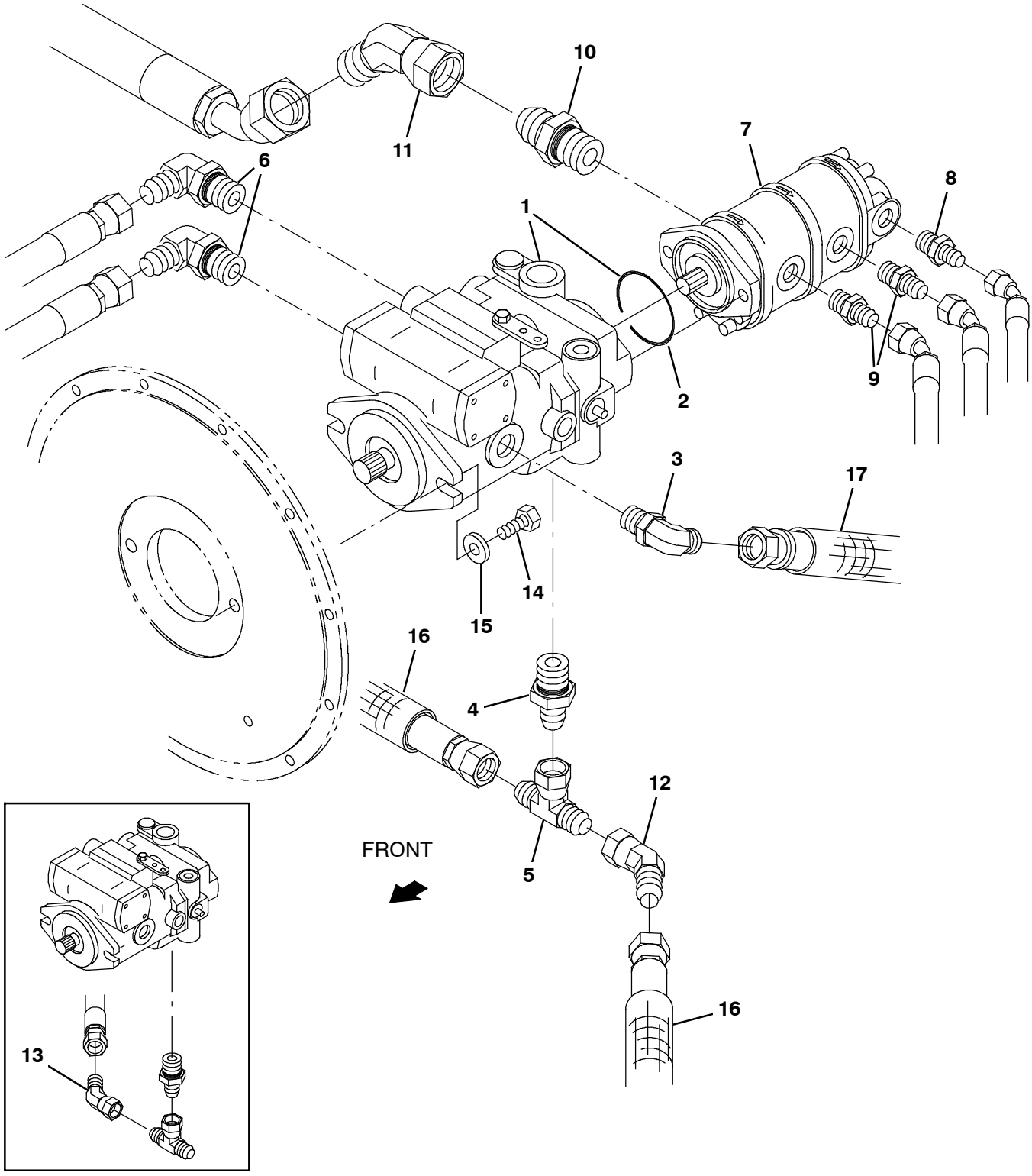

07597 - G, LP

Fig. 73 - Hydraulic Pumps Group

	Ref.	Part No.	Serial Number	Description	Qty.
	1	74163	(004000- 004586)	Pump- Hyd Piston V (See Breakdowns)	1
▽	1	373404	(004587-)	Pump- Hyd Piston V (See Breakdowns)	1
▲	2	65145- 1	(004000-)	O- Ring Gland	1
	3	46481	(004000-)	Ftg- Hyd E90 Jm12/Om12	1
	4	67310	(004000-)	Ftg- Hyd Str Jm12/Om16	1
	5	62389	(004000-)	Ftg- Hyd Tee Jm12Jfjm	1
	6	9008645	(004000- 007467)	Hose Kit, Rear Drive, Replmt	1
	6	767407	(007468-)	Fitting, Hyd, E90, Fm12/Om16	2
	7	62561	(004000- 004936)	Pump- Hyd Gear Ex (See Breakdowns)	1
	7	373254	(004937-)	Pump- Hyd Gear Ex (See Breakdowns)	1
	8	47508	(004000-)	Ftg- Hyd Str Jm06/Om10	1
	9	56692	(004000-)	Ftg- Hyd Str Jm08/Om10	2
	10	58858	(004000-)	Ftg- Hyd Str Jm20/Om20	1
	11	19544	(004000-)	Ftg- Hyd E45 Jm20/Jf20	1
	12	07934	(004000-)	Ftg- Hyd E45 Jm12/Jf12	1
	13	07934	(004000- 008014)	Fitting, Hyd, E45, Jf12/Jm12	1
	14	39810	(004000-)	Screw, Hex, .50- 13 X 1.25, G5	2
	15	32486	(004000-)	Washer, Flat, 0.53b 1.06d .10, Stl, Pl	2
	16	50121	(008015-)	Sleeve, Nyl, 1.63id 08.0l	2
	17	82830	(008015-)	Sleeve, Nyl, 1.63id 16.0l	1

Fig. 74 - Hydraulic Schematic

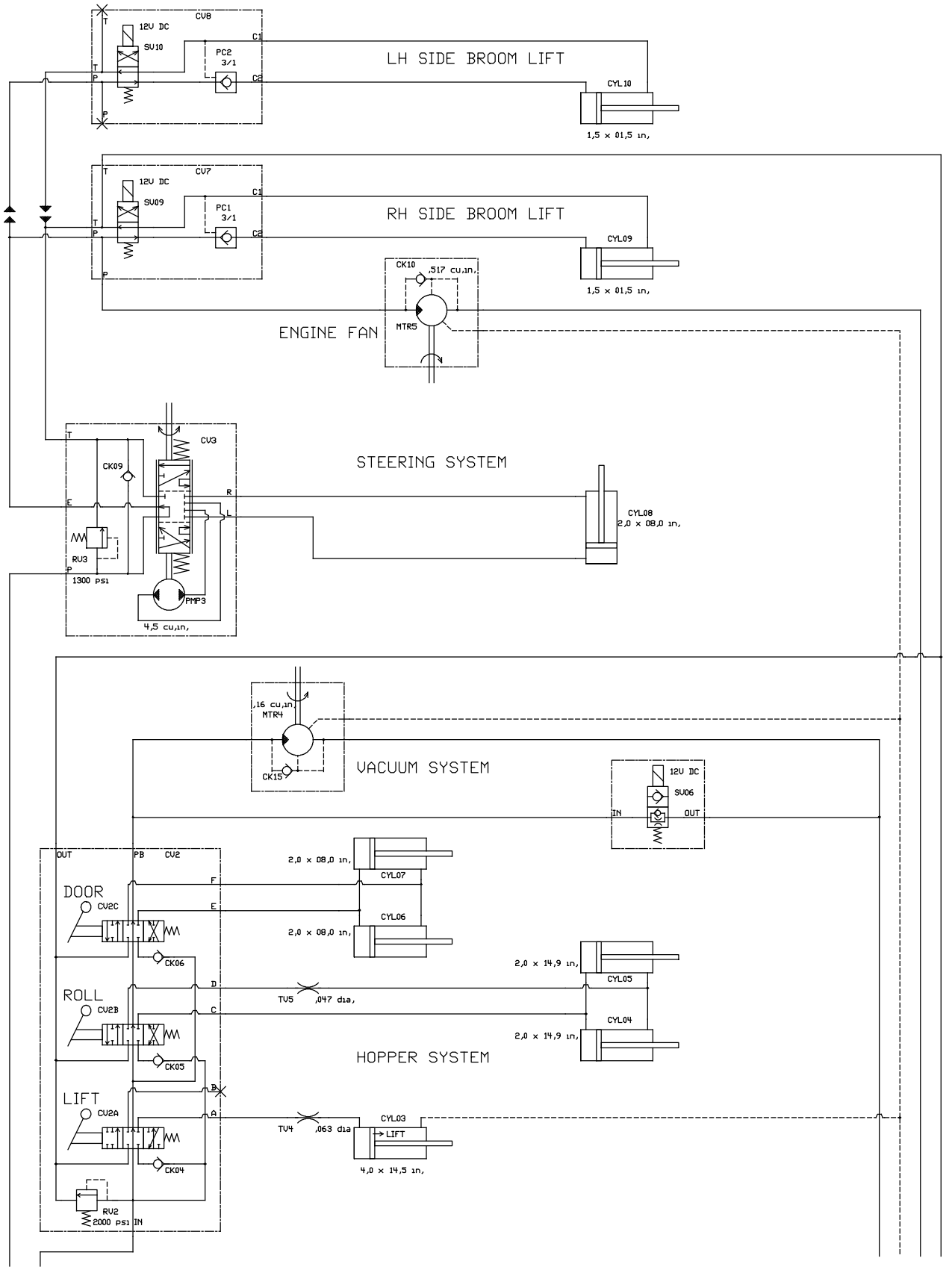

Fig. 74 - Hydraulic Schematic

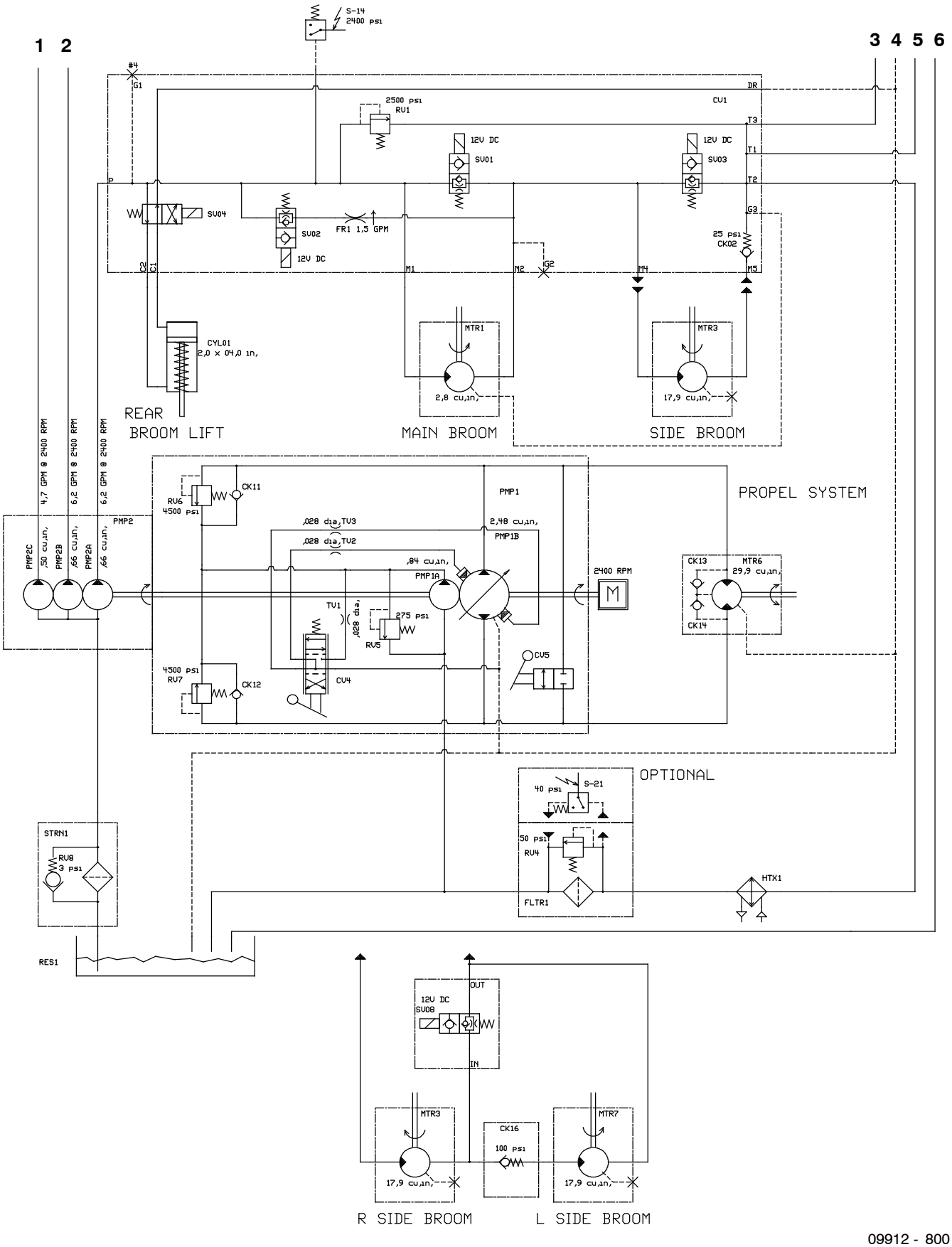

09912 - 800

Fig. 75 - Hydraulic Hose Group (004000-004936)

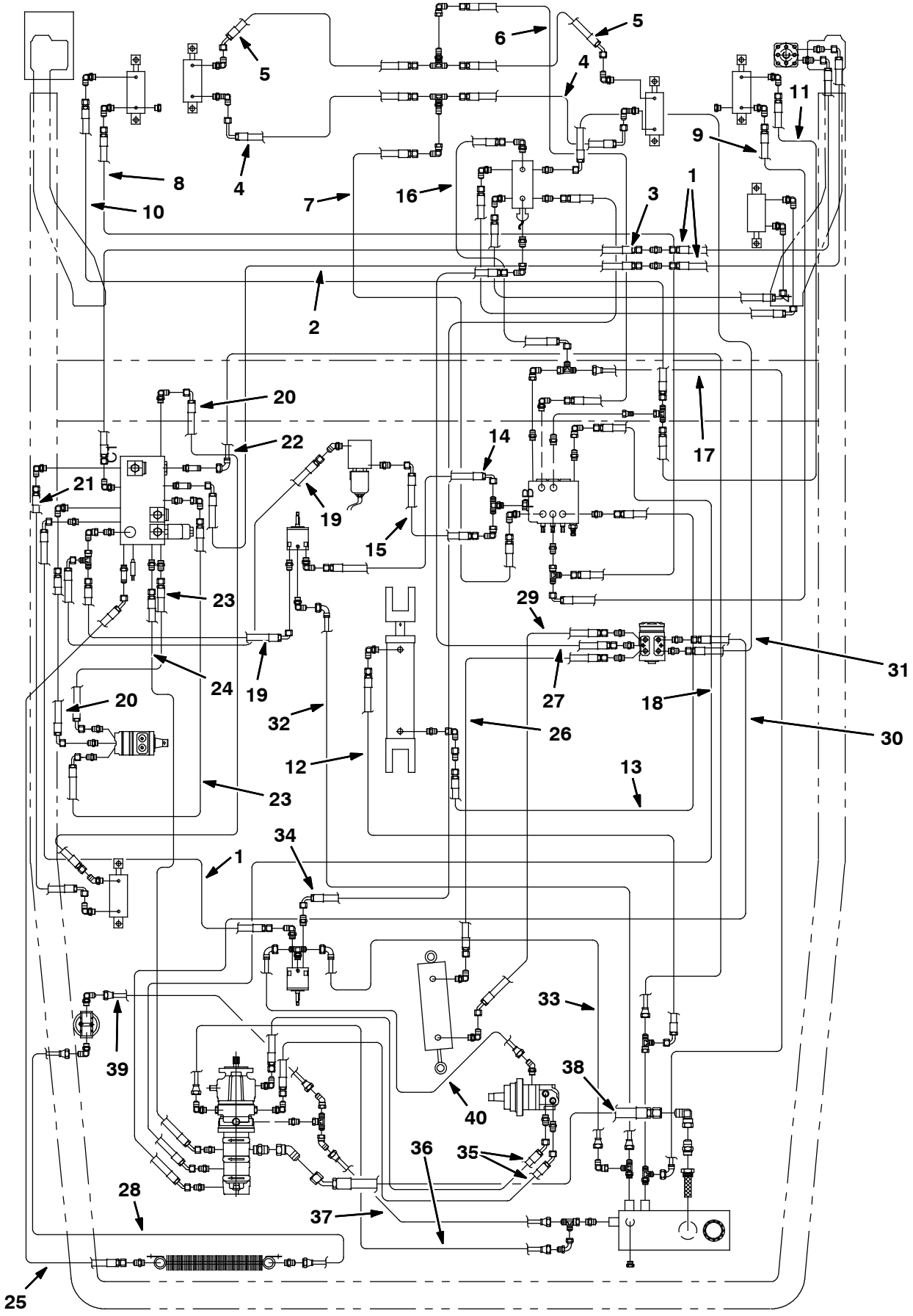

07616 - 800

Fig. 75 - Hydraulic Hose Group (004000- 004936)

Ref.	Part No.	Serial Number	Description	Qty.
1	65194	(004000- 004936)	Hose, Hyd, Med06, Jf06e90/Jf06str, 072.0	3
2	65197	(004000- 004936)	Hose, Hyd, Med08, Jf08e90/Jf08str, 062.0	1
3	65224	(004000- 004936)	Hose, Hyd, Med08, Jf08str/Jf08str, 066.0	1
4	65188	(004000- 004936)	Hose, Hyd, Med04, Jf04e90l/Jf04str,038.0	2
5	57173	(004000- 004936)	Hose, Hyd, Med04, Jf04e45/Jf04str, 034.0	2
6	76498	(004000- 004936)	Hose, Hyd, Tc04, Jf04str/Jf04str, 138.0	1
7	79642	(004000- 004936)	Hose, Hyd, Tc04, Jf04str/Jf04str, 142.0	1
8	21117	(004000- 004936)	Hose, Hyd, Tc04, Jf04str/Jf04str, 098.0	1
9	21119	(004000- 004936)	Hose, Hyd, Tc04, Jf04e90/Jf04str, 092.0	1
10	77641	(004000- 004936)	Hose, Hyd, Tc04, Jf04str/Jf04str, 114.0	1
11	77640	(004000- 004936)	Hose, Hyd, Tc04, Jf04str/Jf04str, 106.0	1
12	71552	(004000- 004936)	Hose, Hyd, Med06, Jf06e90/Jf06str, 046.0	1
13	55700	(004000- 004936)	Hose, Hyd, Med04, Jf04str/Jf04str, 026.0	1
14	82843	(004000- 004936)	Hose, Hyd, Med08, Jf08e90/Jf08str, 028.0	1
15	82820	(004000- 004936)	Hose, Hyd, Med08, Jf08e90/Jf08str, 034.0	1
16	65195	(004000- 004936)	Hose, Hyd, Med06, Jf06e90/Jf06str, 023.0	1
17	65212	(004000- 004936)	Hose, Hyd, Low06, Jf06e90/Jf06str, 060.0	1
18	65204	(004000- 004936)	Hose, Hyd, Med08, Jf08e45/Jf08str, 106.0	1
19	34355	(004000- 004936)	Hose, Hyd, Med08, Jf08e90/Jf08str, 040.0	2
20	57963	(004000- 004936)	Hose, Hyd, Med04, Jf04e90/Jf04str, 056.0	4
21	34379	(004000- 004936)	Hose, Hyd, Med04, Jf04e90/Jf04str, 072.0	1
22	65213	(004000- 004936)	Hose, Hyd, Low06, Jf06e90/Jf06str, 086.0	1
23	34360	(004000- 004936)	Hose, Hyd, Med08, Jf08e90/Jf08str, 058.0	2
24	33799	(004000- 004936)	Hose, Hyd, Med08, Jf08e45/Jf08str, 060.0	1
25	65199	(004000- 004936)	Hose, Hyd, Med12, Jf12e45/Jf12str, 074.0	1
26	01987	(004000- 004936)	Hose, Hyd, Med06, Jf06str/Jf06str, 027.0	1
27	16431	(004000- 004936)	Hose, Hyd, Med06, Jf06str/Jf06str, 022.0	1
28	82835	(004000- 004936)	Hose, Hyd, Low12, Jf12str/Jf12str, 038.0	1
29	76497	(004000- 004936)	Hose, Hyd, Med06, Jf06e45/Jf06str, 035.0	1
30	65191	(004000- 004936)	Hose, Hyd, Med06, Jf06e45/Jf06str, 112.0	1
31	57944	(004000- 004936)	Hose, Hyd, Med06, Jf06e90/Jf06str, 024.0	1
32	21729	(004000- 004936)	Hose, Hyd, Low04, Jf04e90/Jf04str, 066.0	2
33	65196	(004000- 004936)	Hose, Hyd, Low04, Jf04e90/Jf04str, 048.0	1
34	31563	(004000- 004936)	Hose, Hyd, Med06, Jf06e90/Jf06str, 060.0	1
35	9008645	(004000- 004936)	Hose Kit, Rear Drive, Replmt	1
36	65205	(004000- 004936)	Hose, Hyd, Low12, Jf12str/Jf12str, 027.0	1
37	65202	(004000- 004936)	Hose, Hyd, Low12, Jf12str/Jf12str, 016.0	1
38	77473	(004000- 004936)	Hose, Hyd, Suc20, Jf20e45/Jf20str, 022.5	1
39	380675	(004000- 004936)	Hose, Hyd, Low12, Jf12str/Jf12str, 020.0	1
40	02549	(004000- 004936)	Hose, Hyd, Low04, Jf04e90/Jf04str, 060.0	1

Fig. 76 - Hydraulic Hose Group (004937-)

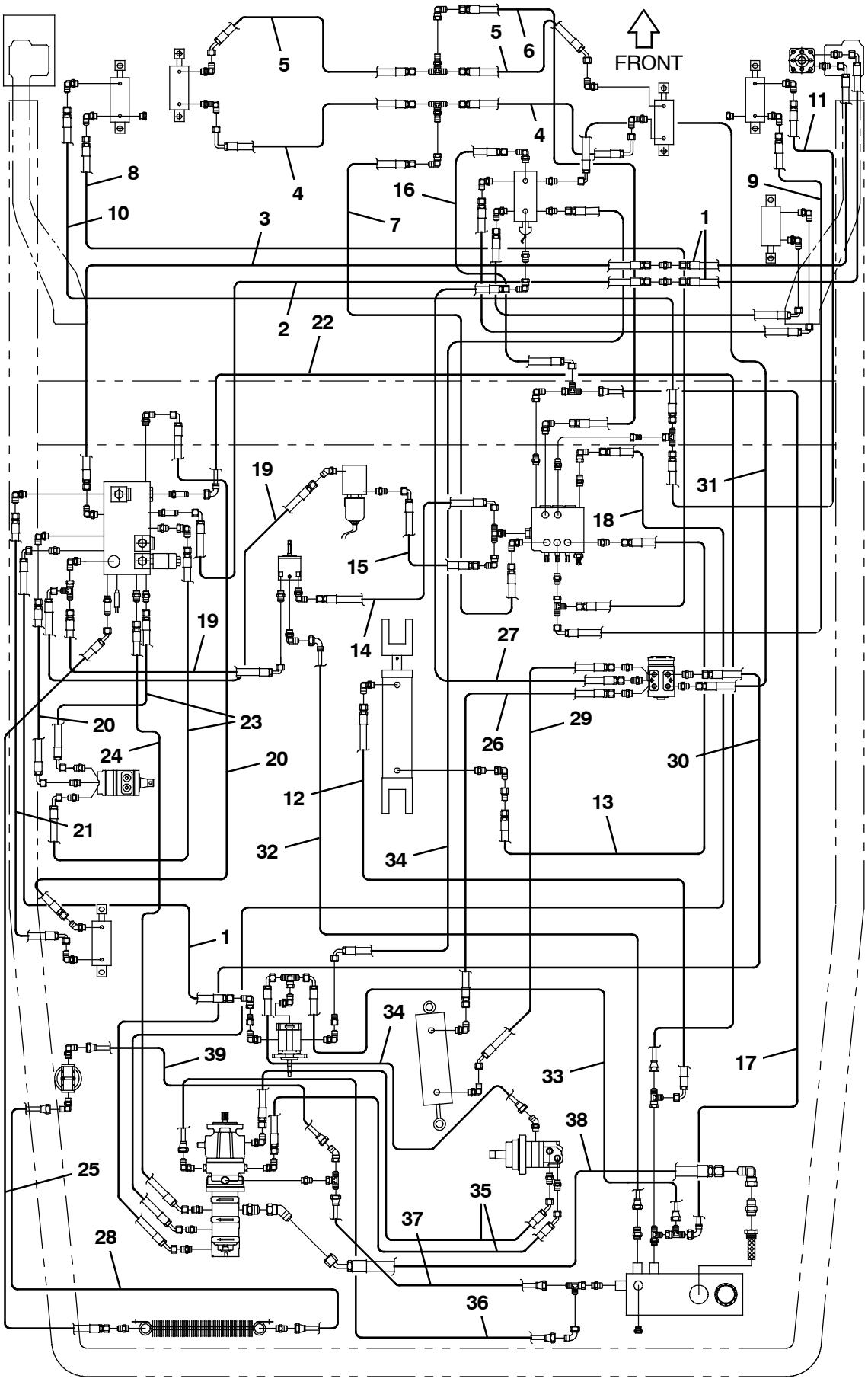

353877 - 800

Fig. 76 - Hydraulic Hose Group (004937-)

Ref.	Part No.	Serial Number	Description	Qty.
1	65194	(004937-)	Hose, Hyd, Med06, Jf06e90/Jf06str, 072.0	3
2	65197	(004937-)	Hose, Hyd, Med08, Jf08e90/Jf08str, 062.0	1
3	65224	(004937-)	Hose, Hyd, Med08, Jf08str/Jf08str, 066.0	1
4	65188	(004937-)	Hose, Hyd, Med04, Jf04e90l/Jf04str,038.0	2
5	57173	(004937-)	Hose, Hyd, Med04, Jf04e45/Jf04str, 034.0	2
6	76498	(004937-)	Hose, Hyd, Tc04, Jf04str/Jf04str, 138.0	1
7	79642	(004937-)	Hose, Hyd, Tc04, Jf04str/Jf04str, 142.0	1
8	21117	(004937-)	Hose, Hyd, Tc04, Jf04str/Jf04str, 098.0	1
9	21119	(004937-)	Hose, Hyd, Tc04, Jf04e90/Jf04str, 092.0	1
10	77641	(004937-)	Hose, Hyd, Tc04, Jf04str/Jf04str, 114.0	1
11	77640	(004937-)	Hose, Hyd, Tc04, Jf04str/Jf04str, 106.0	1
12	71552	(004937-)	Hose, Hyd, Med06, Jf06e90/Jf06str, 046.0	1
13	55700	(004937-)	Hose, Hyd, Med04, Jf04str/Jf04str, 026.0	1
14	82843	(004937-)	Hose, Hyd, Med08, Jf08e90/Jf08str, 028.0	1
15	82820	(004937-)	Hose, Hyd, Med08, Jf08e90/Jf08str, 034.0	1
16	65195	(004937-)	Hose, Hyd, Med06, Jf06e90/Jf06str, 023.0	1
17	65212	(004937-)	Hose, Hyd, Low06, Jf06e90/Jf06str, 060.0	1
18	65204	(004937- 008014)	Hose, Hyd, Med08, Jf08e45/Jf08str, 106.0	1
18	1073602	(008015-)	Hose, Hyd, Med08, Jf08e45/Jf08str, 112.0	1
19	34355	(004937-)	Hose, Hyd, Med08, Jf08e90/Jf08str, 040.0	2
20	57963	(004937-)	Hose, Hyd, Med04, Jf04e90/Jf04str, 056.0	4
21	34379	(004937-)	Hose, Hyd, Med04, Jf04e90/Jf04str, 072.0	1
22	65213	(004937-)	Hose, Hyd, Low06, Jf06e90/Jf06str, 086.0	1
23	34360	(004937-)	Hose, Hyd, Med08, Jf08e90/Jf08str, 058.0	2
24	33799	(004937-)	Hose, Hyd, Med08, Jf08e45/Jf08str, 060.0	1
25	65199	(004937-)	Hose, Hyd, Med12, Jf12e45/Jf12str, 074.0	1
26	01987	(004937-)	Hose, Hyd, Med06, Jf06str/Jf06str, 027.0	1
27	16431	(004937-)	Hose, Hyd, Med06, Jf06str/Jf06str, 022.0	1
28	82835	(004937- 008014)	Hose, Hyd, Low12, Jf12str/Jf12str, 038.0	1
28	1073603	(008015-)	Hose, Hyd, Med12, Jf12str/Jf12str, 031.0	1
29	76497	(004937-)	Hose, Hyd, Med06, Jf06e45/Jf06str, 035.0	1
30	65191	(004937- 008014)	Hose, Hyd, Med06, Jf06e45/Jf06str, 112.0	1
30	1073601	(008015-)	Hose, Hyd, Med06, Jf06e45/Jf06str, 118.0	1
31	57944	(004937-)	Hose, Hyd, Med06, Jf06e90/Jf06str, 024.0	1
32	21729	(004937-)	Hose, Hyd, Low04, Jf04e90/Jf04str, 066.0	2
33	31603	(004937-)	Hose, Hyd, Low06, Jf06e90/Jf06str, 052.0	1
34	31563	(004937-)	Hose, Hyd, Med06, Jf06e90/Jf06str, 060.0	2
35	9008645	(004937- 007467)	Hose Kit, Rear Drive, Replmt	1
35	1064170	(007468-)	Hose, Hyd, Tc12, Ff12e45/Ff12str, 045.0	2
36	65205	(004937- 008014)	Hose, Hyd, Low12, Jf12str/Jf12str, 027.0	1
36	1073858	(008015-)	Hose, Hyd, Low12, Jf12str/Jf12str, 030.0	1
37	65202	(004937- 008014)	Hose, Hyd, Low12, Jf12str/Jf12str, 016.0	1
37	1073858	(008015-)	Hose, Hyd, Low12, Jf12str/Jf12str, 030.0	1
38	77473	(004937-)	Hose, Hyd, Suc20, Jf20e45/Jf20str, 022.5	1
39	57568	(004937-)	Hose, Hyd, Low12, Jf12str/Jf12str, 018.0	1

Fig. 77 - Hydraulic Reservoir Group

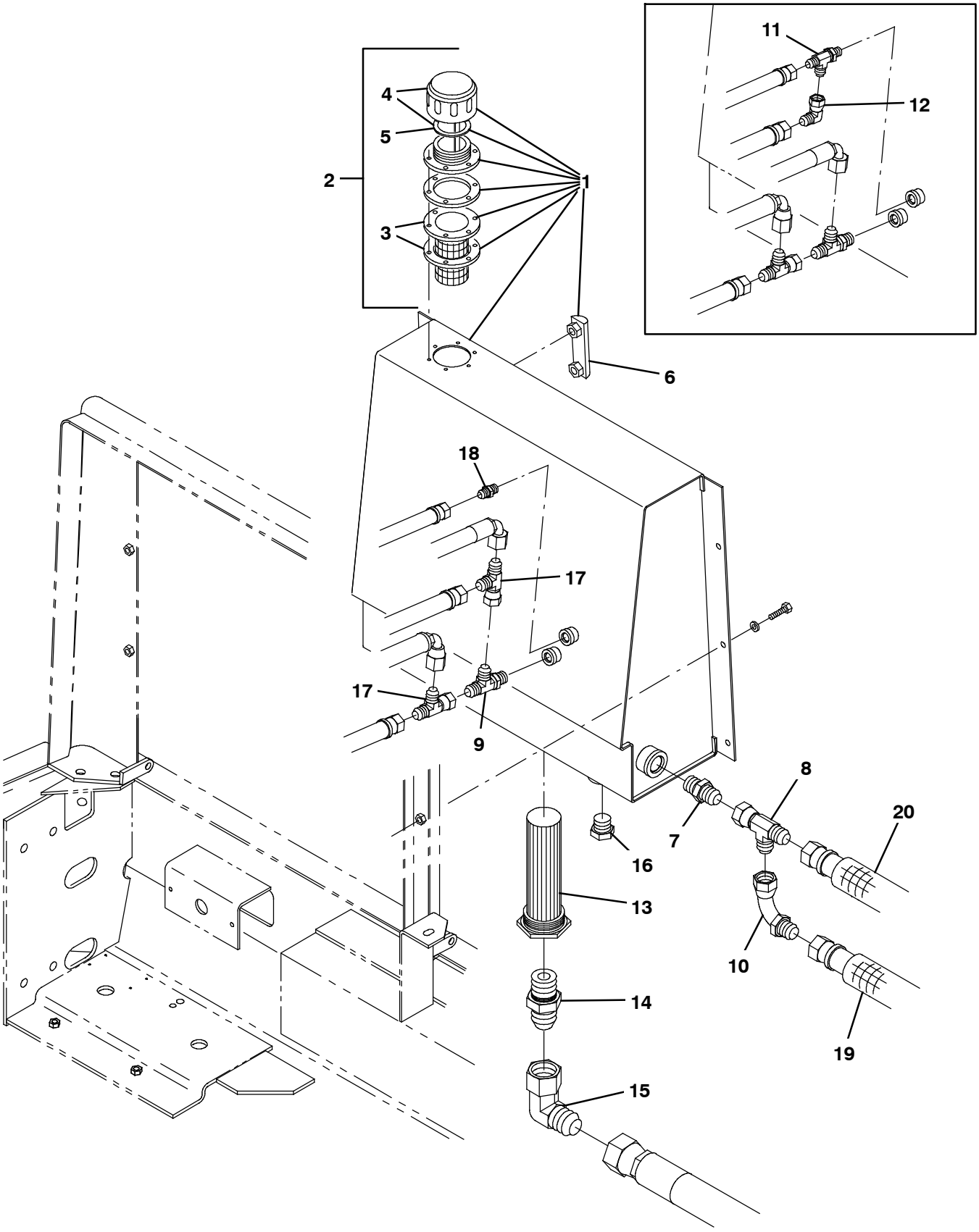

07603 - ALL

Fig. 77 - Hydraulic Reservoir Group

	Ref.	Part No.	Serial Number	Description	Qty.
▽	1	380736	(004000-)	Tank Wldt, Hydraulic w/label	1
▲▽	2	34306	(004000-)	Breather, Hyd	1
▲▲	3	61288	(004000-)	Gasket, Hyd Tank Breather	2
▲▲	4	70072	(004000-)	Breather Cap and Gasket	1
▲▲	5	70006	(004000-)	Gasket, Hyd Cap	1
▲	6	65215	(004000-)	Gauge, Sight Lh	1
	7	42260	(004000-)	Ftg- Hyd Str Jm12/Om12	1
	8	40514	(004000-)	Ftg- Hyd Tee Jm12Jmjf	1
	9	76316	(004000-)	Ftg- Hyd Tee Jm06Jmom	1
	10	57994	(004000-)	Ftg- Hyd E90 Special Jm12/Jf12	1
	11	34390	(004000- 004936)	Ftg- Hyd Tee Jm04Jmom	1
	12	39210	(004000- 004936)	Ftg- Hyd E90 Jm04/Jf04	1
	13	31613	(004000-)	Strainer- Hyd Suction 25- 100- 03	1
	14	58858	(004000-)	Ftg- Hyd Str Jm20/Om20	1
	15	19459	(004000-)	Ftg- Hyd E90	1
	16	33817	(004000-)	Ftg- Hyd Plg Om12	1
	17	42215	(004937-)	Ftg- Hyd Tee Jm06Jmjf	2
	18	55586	(004937-)	Fitting, Hyd, Str, Jm04/Om04	1
	19	50121	(008015-)	Sleeve, Nyl, 1.63id 08.0l	1
	20	82830	(008015-)	Sleeve, Nyl, 1.63id 16.0l	1

Fig. 78 - Hydraulic Filter and Cooler Group

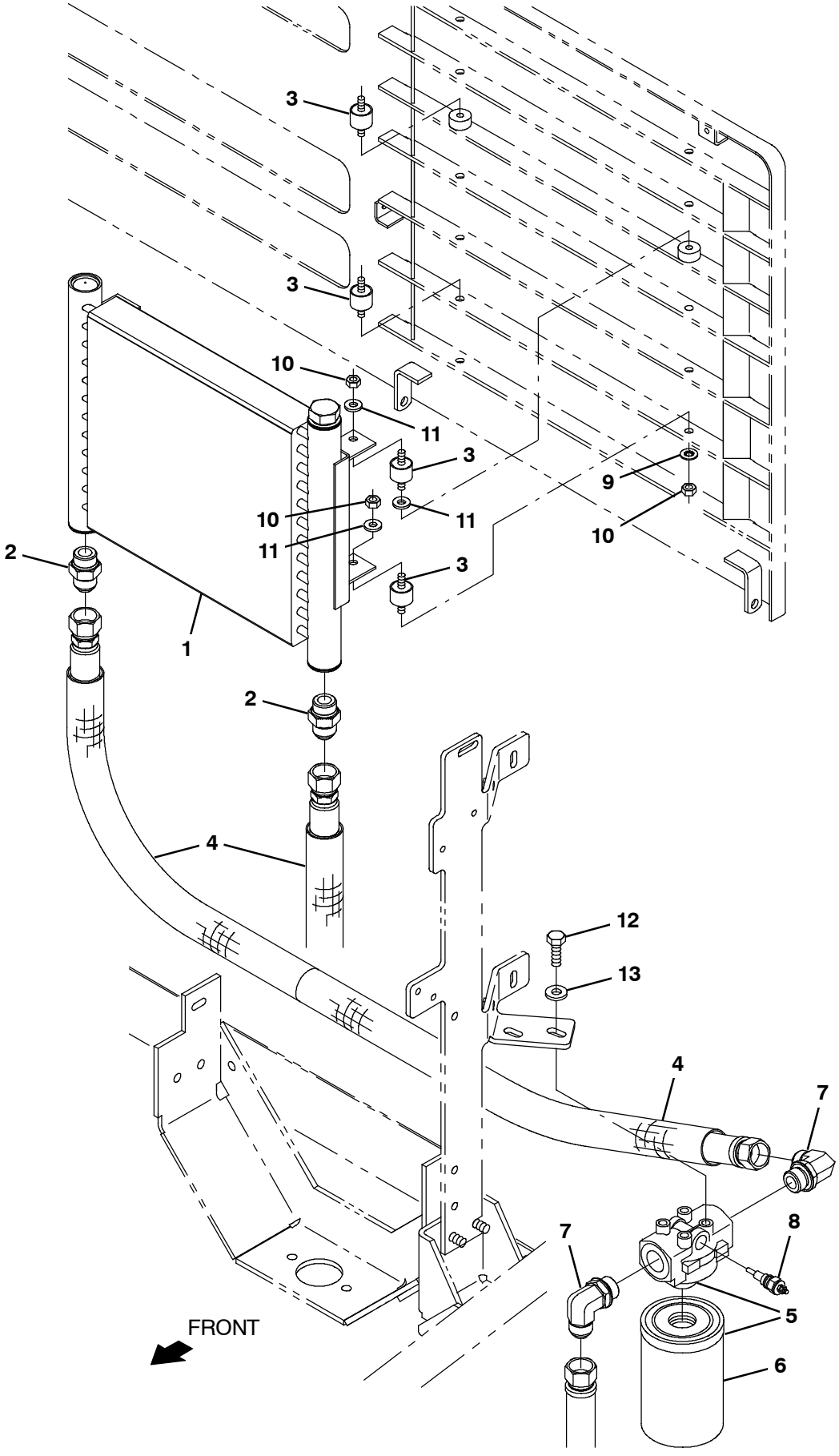

356441 - G, LP

Fig. 78 - Hydraulic Filter and Cooler Group

	Ref.	Part No.	Serial Number		Description	Qty.
	1	64419	(004000-	)	Cooler, Hyd, 24gpm 400btu Of08 13x12x2	1
	2	42260	(004000-	)	Fitting, Hyd, Str, Jm12/Om12	2
	3	51322	(004000-	)	Isolator, Vib, Ring, 1.0d .31- 18/.31- 18	4
	4	82830	(004000-	)	Sleeve, Nyl, 1.63id 16.0l	3
▽	5	10664	(004000-	)	Filter Assy, Hyd, 10mic 035gpm, Spin- On	1
▲	6	65221	(004000-	)	Element, Fltr, Hyd Oil	1
	7	46481	(004000-	)	Fitting, Hyd, E90, Jm12/Om12	2
	8	65222	(004000-	)	Send- Unit, Fltr, Hyd	1
	9	32984	(004000-	)	Washer, Lock, Int, 0.31	2
	10	19313	(004000-	)	Nut, Hex, Std, .31- 18	6
	11	32491	(004000-	)	Washer, Flat, 0.31, Std	6
	12	21195	(004000-	)	Screw, Hex, .38- 16 X 0.75, G5	2
	13	41187	(004000-	)	Washer, Flat, Belleville, .38	2

Fig. 79 - Hydraulic Solenoid Valve Group

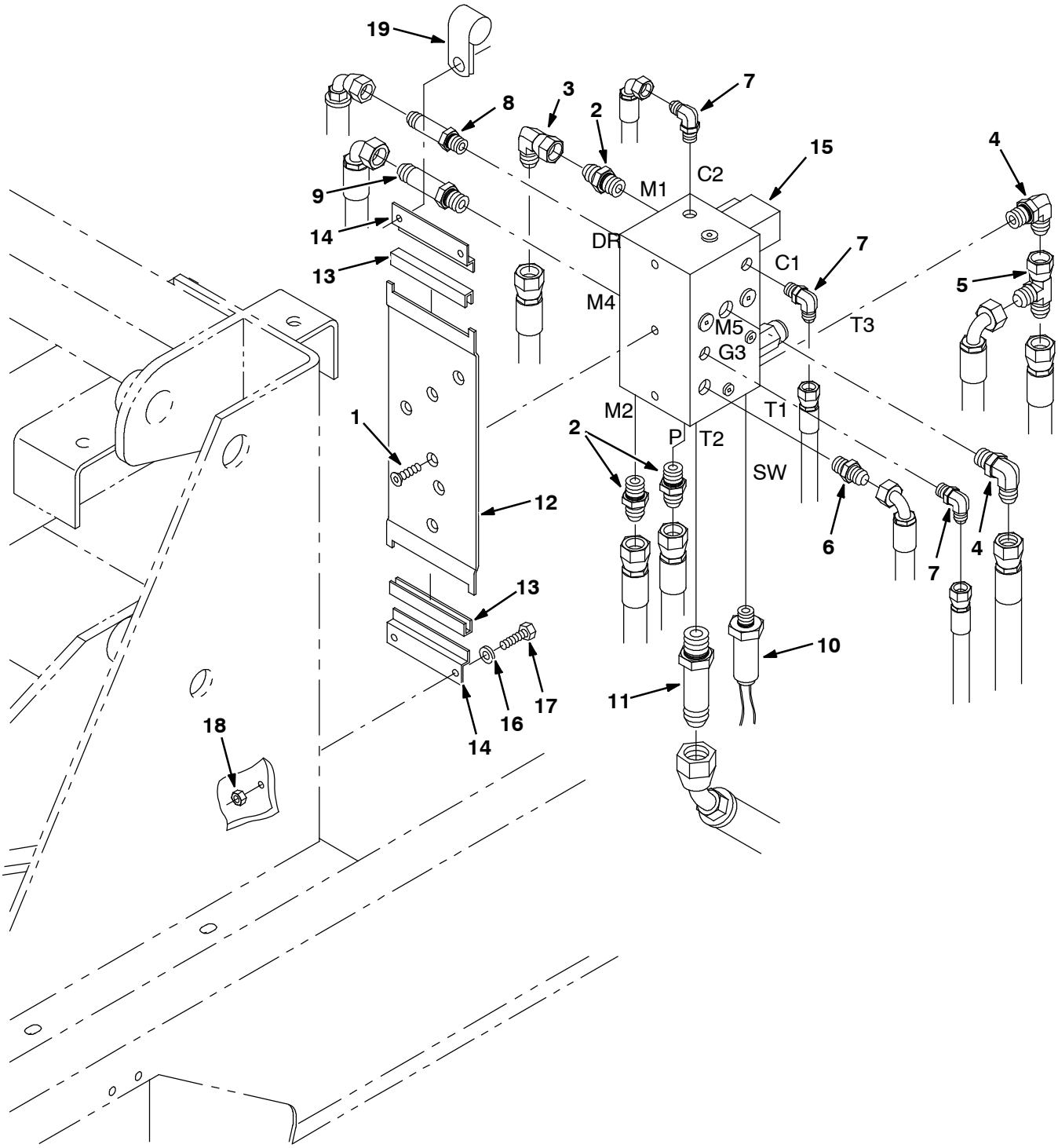

07650 - 800

Fig. 79 - Hydraulic Solenoid Valve Group

Ref.	Part No.	Serial Number	Description	Qty.
1	32129	(004000-)	Scr Flt M8x1.25 20	3
2	44869	(004000-)	Ftg- Hyd Str Jm08/Om08	3
3	17980	(004000-)	Ftg- Hyd E90 Jm08/Jf08	1
4	44868	(004000-)	Ftg- Hyd E90 Jm08/Om08	2
5	45482	(004000-)	Ftg- Hyd Tee Jm08Jmjf	1
6	56690	(004000-)	Ftg- Hyd Str Jm06/Om06	1
7	77097	(004000-)	Ftg- Hyd E90 Jm04/Om04	3
8	59577	(004000-)	Ftg- Hyd Str Jm06Om06L	1
9	31605	(004000-)	Ftg- Hyd Str Jm08Om08L	1
10	77575	(004000-)	Switch Assy, Pressure, Hyd	1
11	57993	(004000-)	Ftg- Hyd Str Jm12Om12L	1
12	64228	(004000-)	Plate, Mtg, Valve, Solenoid	1
13	10911	(004000-)	Isolator, Vac Fan	2
14	06146	(004000-)	Bracket, Mounting	2
15	84014	(004000- 007338)	Valve- Hyd, Solenoid (See Breakdowns)	1
15	1049209	(007339-)	Valve, Cntrl, Hyd, Solenoid, 12vdc 08gpm (See Breakdowns)	1
16	19066	(004000-)	Washer, Flat, #10	4
17	06943	(004000-)	Screw, Hex, M6 X 1.0 X 20, 8.8	4
18	07790	(004000-)	Nut, Hex, Flng, M6 X 1.0	4
19	69234	(004000-)	Clamp, Cable, Stl, 1.00d X 0.75w, 1h	1

Fig. 80 - Hydraulic Lift Valve Group

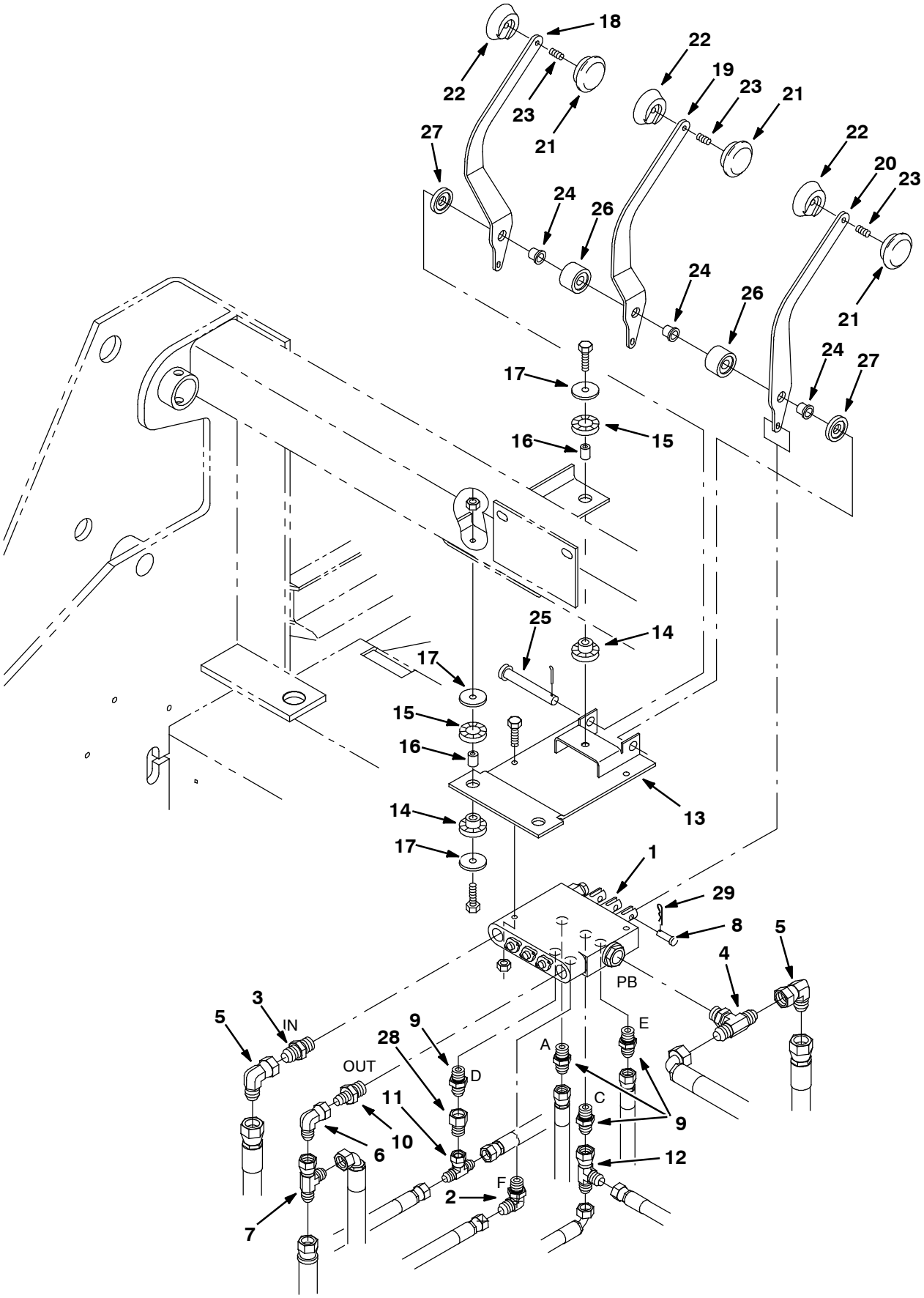

07613 - NA

Fig. 80 - Hydraulic Lift Valve Group

Ref.	Part No.	Serial Number	Description	Qty.
1	375563	(004000-)	Valve, Hyd Control Man (See Breakdowns)	1
2	47638	(004000-)	Fitting, Hyd, E90, Jm04/Om06	1
3	44869	(004000-)	Fitting, Hyd, Str, Jm08/Om08	1
4	49933	(004000-)	Fitting, Hyd, Tee, Jm08/Jm08/Om08, Br	1
5	17980	(004000-)	Fitting, Hyd, E90, Jf08/Jm08	2
6	47504	(004000-)	Fitting, Hyd, E90, Jf06/Jm06	1
7	42215	(004000-)	Fitting, Hyd, Tee, Jf06/Jm06/Jm06, Run	2
8	77488	(004000-)	Pin, Clevis, 0.19d X 0.63l	3
9	55685	(004000-)	Fitting, Hyd, Str, Jm04/Om06	3
10	52402	(004000-)	Fitting, Hyd, Str, Jm06/Om08	1
11	57411	(004000-)	Fitting, Hyd, Tee, Jf04/Jm04/Jm04, Br	1
12	57988	(004000-)	Fitting, Hyd, Tee, Jf04/Jm04/Jm04, Run	1
13	77485	(004000-)	Bracket Wldt, Mtg, Valve	1
14	62173	(004000-)	Isolator, Vib, Bshg, 1.4d 0.3l .4b 0.65h	3
15	62172	(004000-)	Isolator, Vib, Ring, 1.4d 0.3l 0.8b	3
16	64905	(004000-)	Tube, 0.26id 0.38od 00.6l, Stl, Pl	3
17	1014491	(004000-)	Washer, Flat, 0.28b 1.38d .12, Hrs Pl	5
18	77491	(004000- 008088)	Handle, Valve, Hyd, Rh	1
18	1073833	(008089-)	Handle, Valve, Hyd, Rh [800 Gray]	1
19	77492	(004000- 008088)	Handle, Valve, Hyd, Ctr	1
19	1073834	(008089-)	Handle, Valve, Hyd, Ctr [800 Gray]	1
20	77493	(004000- 008088)	Handle, Valve, Hyd, Lh	1
20	1073835	(008089-)	Handle, Valve, Hyd, Lh [800 Gray]	1
21	64434	(004000-)	Knob, Rnd, 2.00d 0.65l M6, Plstc	3
22	70827	(004000-)	Knob, Rnd, 2.00d 0.84l M6, Plstc	3
23	70847	(004000-)	Screw, Set, Soc, M6 X 1.00 X 20, Pl[45h]	3
24	36556	(004000-)	Bushing, Flng, 0.50b 0.56d 0.22l, Nyl	3
25	06474A	(004000-)	Pin, Clevis, 0.50d X 3.50l	1
26	77498	(004000-)	Spacer	2
27	77499	(004000-)	Spacer	2
28	16455	(004000-)	Fitting, Hyd, Rst, Jf04/Jm04, .047	1
29	08085	(004000-)	Pin, Cotter, Hair, 0.31d .058 Wir	3

Fig. 81 - Side Brush Motor Group

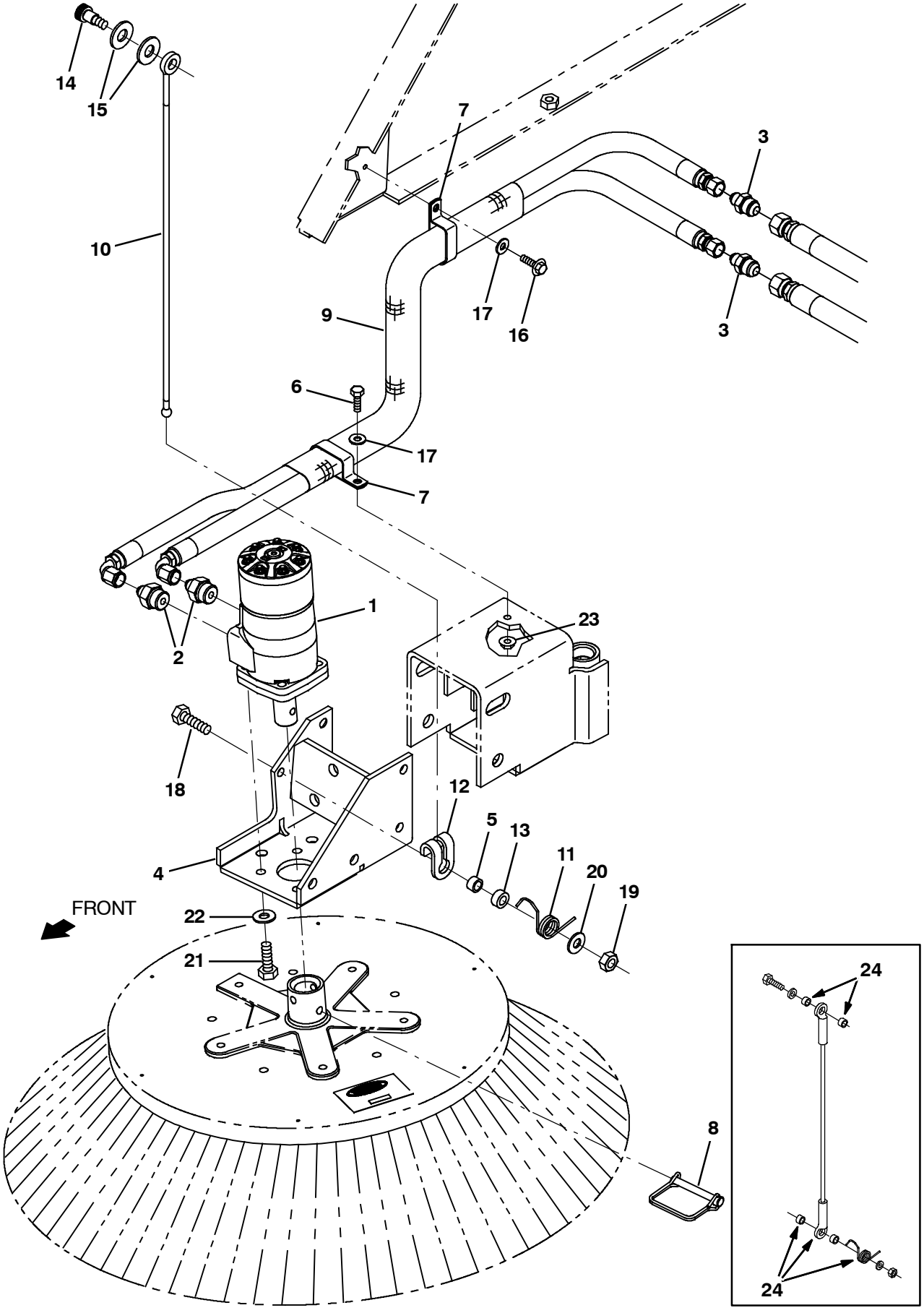

356597 - G, LP, NA

Fig. 81 - Side Brush Motor Group

Ref.	Part No.	Serial Number	Description	Qty.
1	79781	(004000- 007797)	Motor, Hyd, (See Breakdowns) (Replaced by 9009502)	1
1	1057338	(007798-)	Motor, Hyd, Gear, Int 17.9 Bi- Dir 2500	1
2	47508	(004000-)	Fitting, Hyd, Str, Jm06/Om10	2
3	42207	(004000-)	Fitting, Hyd, Str, Jm06/Jm08	2
4	65168	(004000- 008088)	Bracket Wldt, Mtg, Motor	1
4	1074288	(008089-)	Bracket Wldt, Mtg, Motor[800 Gray]	1
5	65174	(004000-)	Tube, 0.44id 0.62od 00.4l, Stl	5
6	06944	(004000-)	Screw, Hex, M6 X 1.00 X 25, 8.8	1
7	67366	(004000-)	Clamp, Cable, Stl, 1.0x2.0x0.62w, 1hole	1
8	84581	(004000-)	Pin Assy, Side Brush W/ Clip	1
9	75028	(004000-)	Sleeve, Nyl, 1.63id 65.0l	1
10	375401	(xxxxxx-)	Cable, Glv .19d 020.3l .44ball /.50eye	1
11	375402	(xxxxxx-)	Spring, Tors, 0.81id .09wir 0.3coil, Rh	1
12	1017898	(xxxxxx-)	Hook, Cable, .44d Ball	1
13	375404	(xxxxxx-)	Tube, 0.44id 0.75od 00.3l, Stl, Pl	1
14	36758	(xxxxxx-)	Bolt, Shld, .50d X 0.50, .38- 16	1
15	32486	(xxxxxx-)	Washer Flat,0.50,Sae	2
16	12459	(004000-)	Screw, Hex, M6 X 1.00 X 20, Fmg	1
17	41185	(004000-)	Washer, Flat, Belleville, .25	2
18	39284	(004000-)	Screw, Hex, M10 X 1.50 X 35, 8.8	1
19	41430	(004000-)	Nut, Hex, Lock, M10 X 1.5, Nl	4
20	32492	(004000-)	Washer, Flat, 0.38, Std	1
21	34195	(004000-)	Screw, Hex, .38- 16 X	4
22	32485	(004000-)	Washer, Flat, 0.38, Sae	4
23	07790	(004000-)	Nut, Hex, Flng, M6 X 1.00	1
24	375400	(004000- xxxxxx)	Cable Kit, Brush, Side, Rh, Ci [800l]	1

Fig. 82 - Side Brush Pivot Group

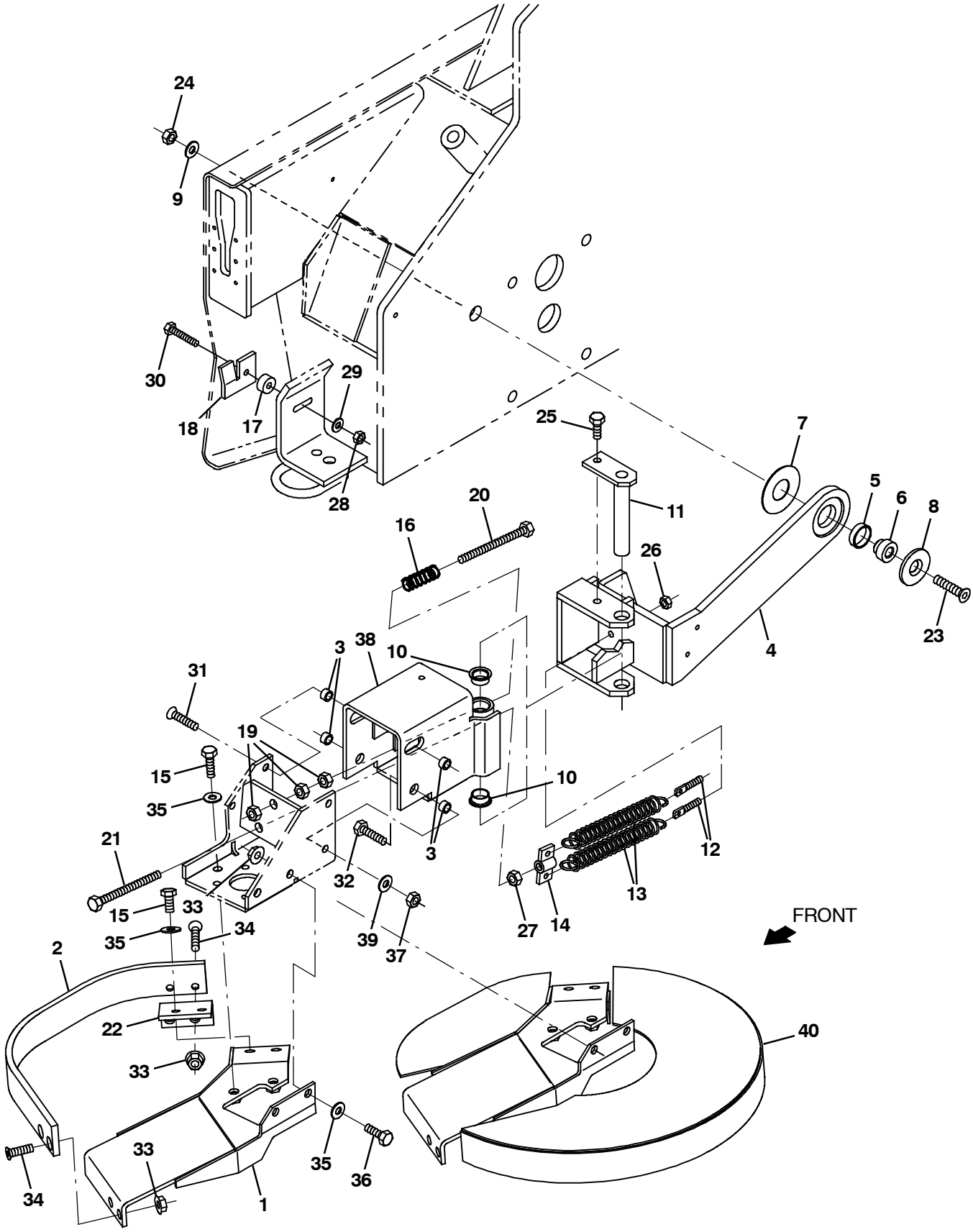

356598 - G, LP, NA

Fig. 82 - Side Brush Pivot Group

Ref.	Part No.	Serial Number	Description	Qty.
1	391841	(004000- 008088)	Bracket Wldt, Mtg, Guard, Side Brush	1
1	1074293	(008089-)	Bracket Wldt, Mtg, Guard, Side Brush	1
2	21238	(004000- 008088)	Guard, Brush, Side .38th 2.0w [800]	1
2	1074286	(008089-)	Guard, Brush, Side .38th 2.0w [800]	1
3	65174	(004000-)	Tube, 0.44id 0.62od 00.4l, Stl	4
4	70521	(004000- 008088)	Arm Wldt, Pivot, Side Brush	1
4	1074291	(008089-)	Arm Wldt, Pivot, Side Brush [800 Gray]	1
5	70627	(004000-)	Bushing, Sleeve, 1.25b 1.40d 0.38l, Bnz	1
6	70526	(004000-)	Shaft, Pivot	1
7	70524	(004000-)	Washer, Flat, 1.30b 3.00d .06, Stl	1
8	70525	(004000-)	Washer, Flat, 0.71b 2.25d .19, Stl, Csk	1
9	36328	(004000-)	Washer, Flat, Belleville, .50	1
10	04761	(004000-)	Bushing, Flng, 0.50b 0.59d 0.38l	2
11	70431	(004000-)	Pin Wldt, Pivot, Brush, Side	1
12	70626	(004000-)	Bolt, Eye, M8 X 1.25 X 051mm, 05.50 Eye	2
13	65160	(004000-)	Spring, Extn, 1.00od 0.15wir 05.8l	2
14	65173	(004000- 008088)	Bracket Wldt, Spring	1
14	1074290	(008089-)	Bracket Wldt, Spring [800 Gray]	1
15	09770	(004000-)	Screw, Hex, M10 X 1.50 X 25, Nl, Ss	4
16	65180	(004000-)	Spring, Dsl, 1.00od 0.50id 1.70l	1
17	74059	(004000-)	Tube, 0.34id 1.00od 00.5l, Stl, Pl	1
18	74060	(004000- 008088)	Bracket, Guide, Arm, Side Brush, Rh	1
18	1074292	(008089-)	Bracket, Guide, Arm, Side Brush, Rh	1
19	07787	(004000-)	Nut, Hex, Std, M10 X 1.50, Ss	3
20	06537	(004000-)	Screw, Hex, M10 X 1.50 X 120, 8.8, Fl	1
21	76438	(004000-)	Screw, Hex, M10 X 1.50 X 90, 8.8, Fl	1
22	21215	(004000- 008088)	Bracket, Angle, Mtg, Side Brush	1
22	1074287	(008089-)	Bracket, Angle, Mtg, Side Brush	1
23	20192	(004000-)	Screw, Flt, Soc, .50- 13 X 2.00, Al	1
24	32985	(004000-)	Nut, Hex, Lock, .50- 13, Nl	1
25	09291	(004000-)	Screw, Hex, M10 X 1.50 X 20, Ss	1
26	39311	(004000-)	Nut, Hex, Std, M8 X 1.25	2
27	39312	(004000-)	Nut, Hex, Std, M10 X 1.50	1
28	08709	(004000-)	Nut, Hex, Lock, M8 X 1.25, Nl	1
29	32491	(004000-)	Washer, Flat, 0.31, Std	1
30	41342	(004000-)	Screw, Hex, M8 X 1.25 X 40, 8.8	1
31	06535	(004000-)	Screw, Flt, Soc, M10 X 1.50 X 35, 10.9	1
32	39284	(004000-)	Screw, Hex, M10 X 1.50 X 35, 8.8	2
33	07792	(004000-)	Nut, Hex, Flng, M10 X 1.50	8
34	09081	(004000-)	Screw, Flt, Soc, M10 X 1.50 X 25, 10.9	4
35	32485	(004000-)	Washer, Flat, 0.38, Sae	5
36	39283	(004000-)	Screw, Hex, M10 X 1.50 X 25, 8.8	2
37	41430	(004000-)	Nut, Hex, Lock, M10 X 1.5, Nl	4
38	65170	(004000- 008088)	Bracket Wldt, Pivot, Side Brush	1
38	1074289	(008089-)	Bracket Wldt, Pivot, Side Brush [Gray]	1
39	32492	(004000-)	Washer, Flat, 0.38, Std	6

Fig. 83 - Side Brush Lift Group

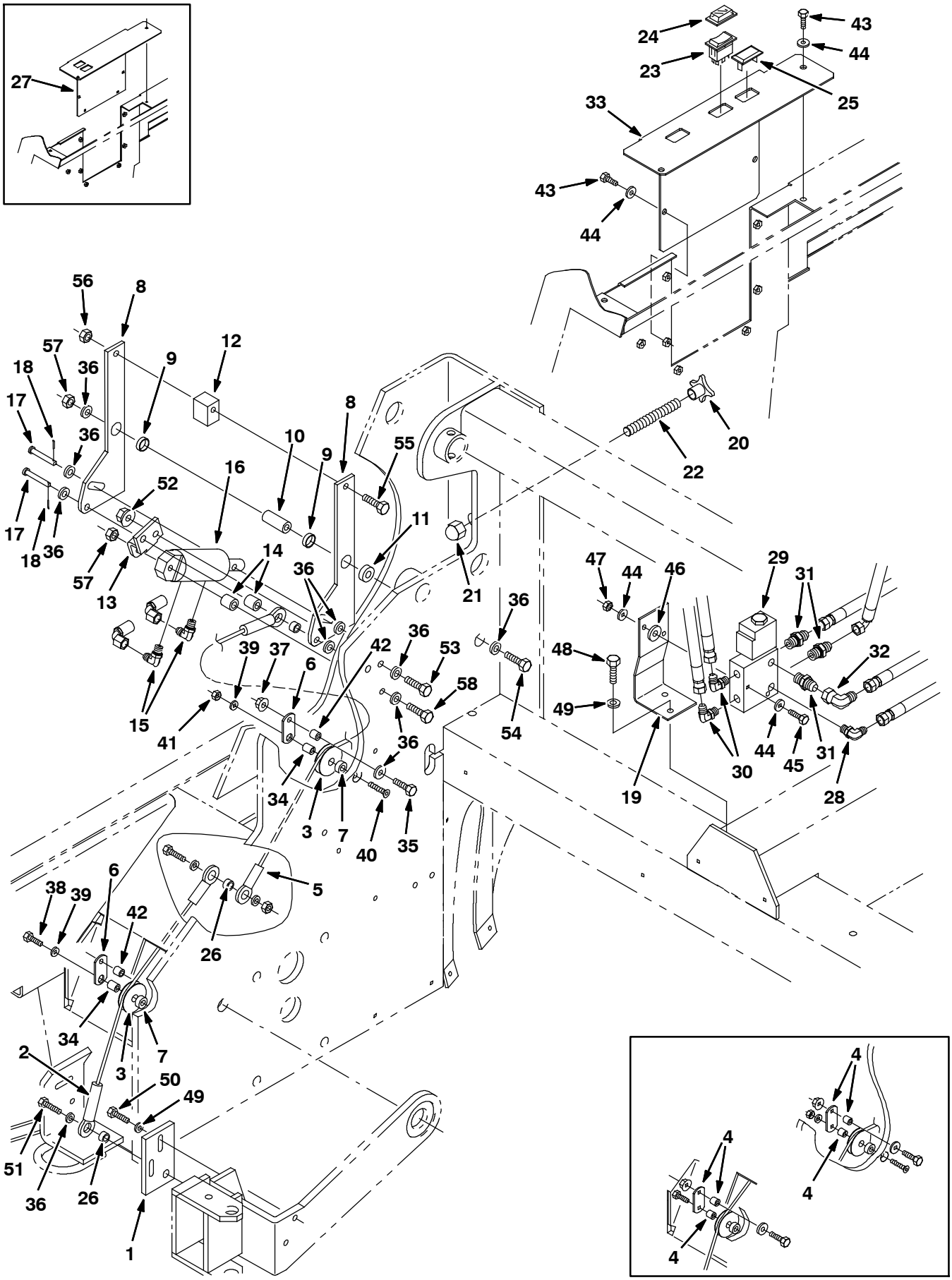

07578 - G, LP

Fig. 83 - Side Brush Lift Group

Ref.	Part No.	Serial Number	Description	Qty.
1	77669	(004000-)	Plate Wldt	1
2	70532	(004000-)	Cable, Glv .25d 021.2l .63eye /.63eye	1
3	74391	(004000-)	Pulley Assy, Cable, 1.5 Dia	2
4	375416	(004000- xxxxxx)	Replacement Kit, Roller, Side Brush Lift	1
5	23936	(004000-)	Cable, Glv .25d 016.8l .64eye /.64eye	1
6	375415	(xxxxxx-)	Plate, Side Brush Roller	2
7	73737	(004000-)	Sleeve, .375B .75D .32 Stl	2
8	77584	(004000-)	Plate	2
9	74090	(004000-)	Bearing	2
10	77597	(004000-)	Sleeve, 0.406B 0.75D1.80 Stl	1
11	77727	(004000-)	Sleeve, .438B 1.00D .35 Stl	1
12	77459	(004000-)	Spacer	1
13	77601	(004000-)	Plate, Angle	1
14	77600	(004000-)	Sleeve,0.406B .750D .800 Stl	1
15	77097	(004000-)	Ftg- Hyd E90 Jm04/Om04	2
16	1041034	(004000-)	Cylinder, Hyd, 1.5b 06.3l 01.50strk 2500	1
17	51813	(004000-)	Pin,Clevis,0.37 Dia.X 2.12 Lg	2
18	08179	(004000-)	Pin, Cotter .094X1.00	2
19	21231	(004000-)	Plate	1
20	77605	(004000-)	Knob, Plastic	1
21	41131	(004000-)	Nut Low Crown .62- 18	1
22	77682	(004000-)	Rod, Thread	1
23	65561	(004000-)	Switch Rocker Spst	1
24	57807	(004000-)	Cover, Rocker Switch Seal	1
25	57772	(004000-)	Plate- Cover	1
26	65174	(004000-)	Spacer	3
27	21109	(004000- 004274)	Plate, Cover	1
28	56820	(004000-)	Ftg- Hyd E90	1
29	84016	(004000- 007338)	Valve, Hyd Solenoid (See Breakdowns)	1
29	1049211	(007339-)	Valve, Cntrl, Hyd, Solenoid, 12vdc 06gpm (See Breakdowns)	1
30	77097	(004000-)	Ftg- Hyd E90 Jm04/Om04	2
31	56690	(004000-)	Ftg- Hyd str	3
32	47504	(004000-)	Ftg- Hyd E90	1
33	375666	(004275- 008088)	Plate, Cover	1
33	1073903	(008089-)	Panel, Cover, Brush Cntrl, Gas/Lpg[Gray]	1
34	80395	(xxxxxx-)	Sleeve, P/M, 0.496d 0.318b 0.65l 430ss	2
35	76570	(xxxxxx-)	Screw, Hex, M8 X 1.25 X 30, 8.8	2
36	32492	(xxxxxx-)	Washer, Flat, 0.38, Std	12
37	07791	(xxxxxx-)	Nut, Hex, Flange, M8 X 1.25	2
38	41342	(xxxxxx-)	Screw, Hex, M8 X 1.25 X 40, 8.8	2
39	33924	(xxxxxx-)	Washer, Flat, M10, Ss	2
40	12317	(xxxxxx-)	Screw, Hex, M10 X 1.50 X 30, Ss	1
41	08714	(xxxxxx-)	Nut, Hex, Lock, M10 X 1.5, Nl, Ss	1
42	222460	(xxxxxx-)	Sleeve, P/M, 0.496d 0.318b 0.50l 430ss	2
43	06943	(004000-)	Screw, Hex, M6 X 1.0 X 20, 8.8	4
44	19066	(004000-)	Washer, Flat, #10	8
45	06548	(004000-)	Screw, Hex, M6 X 1.0 X 60, 8.8	2
46	63416	(004000-)	Washer, Rbr, .12 0.31b 0.88d	2
47	08708	(004000-)	Nut, Hex, Lock, M6 X 1.0, Nl	2
48	16931	(004000-)	Screw, Hex, M8 X 1.25 X 20, 8.8	2

07578 - G, LP

Fig. 83 - Side Brush Lift Group

Ref.	Part No.	Serial Number	Description	Qty.
49	32491	(004000-)	Washer, Flat, 0.31 Std	3
50	09010	(004000-)	Screw, Hex, M8 X 1.25 X 25, Ss	2
51	39283	(004000-)	Screw, Hex, M10 X 1.5 X 25, 8.8	2
52	07792	(004000-)	Nut, Hex, Flng, M10 X 1.5	2
53	39284	(004000-)	Screw, Hex, M10 X 1.5 X 35, 8.8	1
54	03193	(004000-)	Screw, Hex, M10 X 1.5 X 90, 8.8	1
55	06957	(004000-)	Screw, Hex, M8 X 1.25 X 60, 8.8	1
56	08709	(004000-)	Nut, Hex, Lock, M8 X 1.25, Nl	1
57	41430	(004000-)	Nut, Hex, Lock, M10 X 1.5, Nl	1
58	06965	(004000-)	Screw, Hex, M10 X 1.5 X 80, 8.8	1

Fig. 84 - Main Brush Drive Group

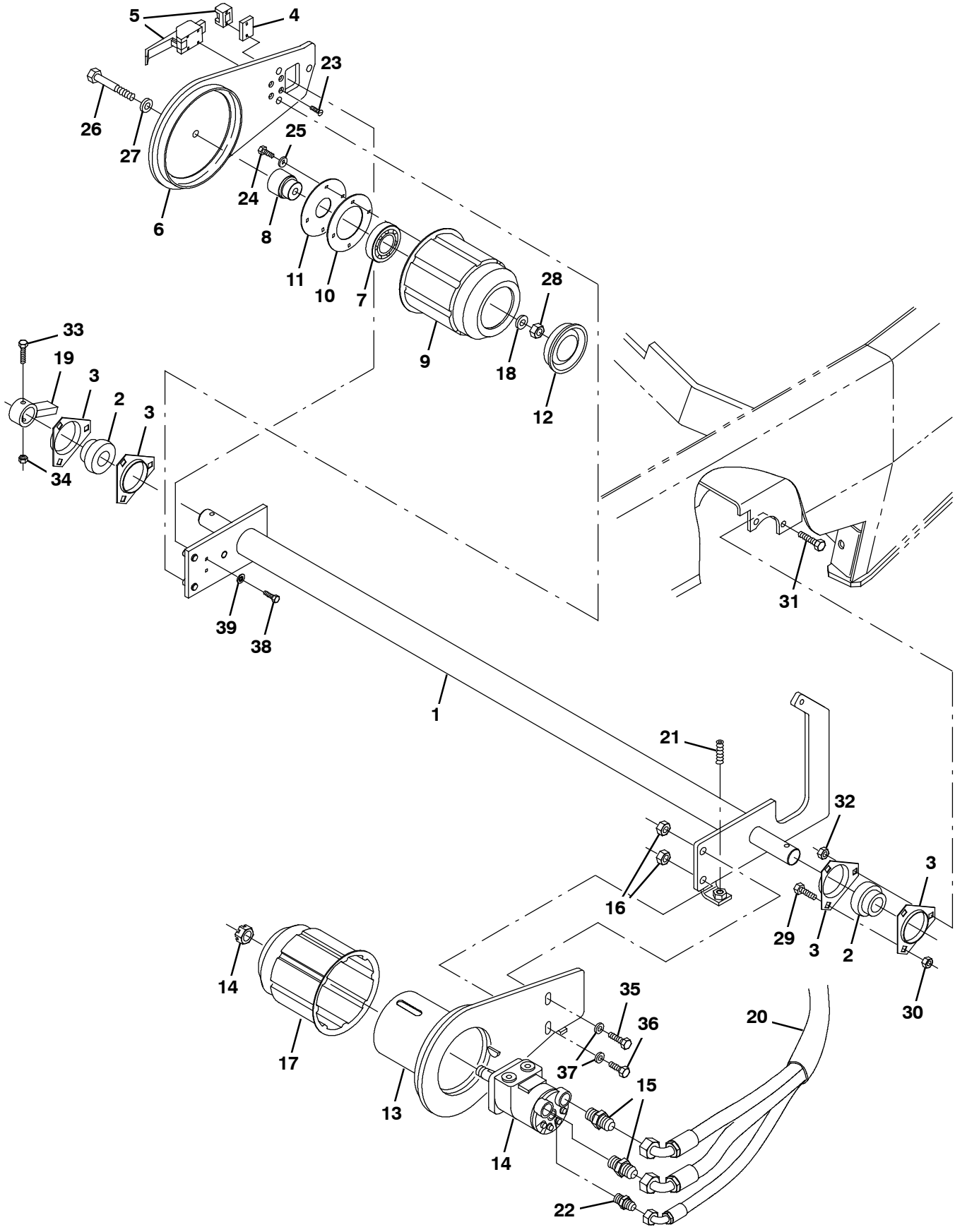

07569 - ALL

Fig. 84 - Main Brush Drive Group

Ref.	Part No.	Serial Number	Description	Qty.
1	63436	(004000-)	Shaft Wldt, Main Brush	1
2	51448	(004000-)	Bearing&Clr ,1.25B 2.44D 1.41W	2
3	51449	(004000-)	Flange,Brg,3 Hole	4
4	63541	(004000-)	Plate, Mtg, Latch	1
5	54878	(004000-)	Latch	1
6	63449	(004000-)	Arm Wldt, M Br, Idler	1
7	24899	(004000-)	Bearing- Ball,1.38B 2.83D 0.67W	1
8	30251	(004000-)	Shaft, Idler	1
9	55779	(004000-)	Plug Wldt, Idler	1
10	30252	(004000-)	Strip, Retainer, Bearing	1
11	30253	(004000-)	Plate, Seal	1
12	30255	(004000-)	Plug, Tube	1
13	63450	(004000-)	Arm Wldt, M Br, Motor	1
14	53434	(004000- 007797)	Motor- Hyd Gear In (See Breakdowns) (Replaced by 9009503)	1
14	1057337	(007798-)	Motor, Hyd, Gear, Int 02.8 Bi- Dir 2500	1
15	44869	(004000-)	Ftg- Hyd Str Jm08/Om08	2
16	07793	(004000-)	Nut, Hex, Flng, M12 X 1.75	2
17	87631	(004000- 007797)	Plug Weld, Brush Drive, Sweep	1
17	1057643	(007798-)	Plug Wldt, Drive, Brush	1
18	51564	(004000-)	Washer, .531B 1.75D .12Cr.Znc	1
19	64811	(004000-)	Bar Wldt, Brush Pressure	1
20	34330	(004000-)	Sleeve, Hyd 30”	1
21	75612	(004000-)	Screw, Set	1
22	55586	(004000-)	Ftg- Hyd Str Jm04/Om04	1
23	09120	(004000-)	Screw, Flt, M5 X 0.8 X 16, 10.9	4
24	12274	(004000-)	Screw, Hex, M6 X 1.0 X 20, 8.8, Nl	4
25	32483	(004000-)	Washer, Flat, 0.25 Sae	4
26	32895	(004000-)	Screw, Hex, .50- 13 X 3.50, 5	1
27	36328	(004000-)	Washer, Belleville, .50	1
28	02931	(004000-)	Nut, Hex, Lock, .50- 13, Nl, Ss	1
29	10819	(004000-)	Bolt, Carriage, .38- 16 X 1.00	2
30	50902	(004000-)	Nut, Hex, Lock, .38- 16, Nl	2
31	39283	(004000-)	Screw, Hex, M10 X 1.5 X 25, 8.8	4
32	07792	(004000-)	Nut, Hex, Flng, M10 X 1.5	4
33	06957	(004000-)	Screw, Hex, M8 X 1.25 X 60, 8.8	1
34	08709	(004000-)	Nut, Hex, Lock, M8 X 1.25, Nl	1
35	06968	(004000-)	Screw, Hex, M12 X 1.75 X 35, 8.8	1
36	41346	(004000-)	Screw, Hex, M12 X 1.75 X 30, 8.8	1
37	32486	(004000-)	Washer, Flat, 0.50 Sae	2
38	12316	(004000-)	Screw, Hex, M5 X 0.80 X 25, Ss	2
39	07514	(004000-)	Washer, Lock, Int, 10, Ss	2

Fig. 85 - Main Brush Lift Group

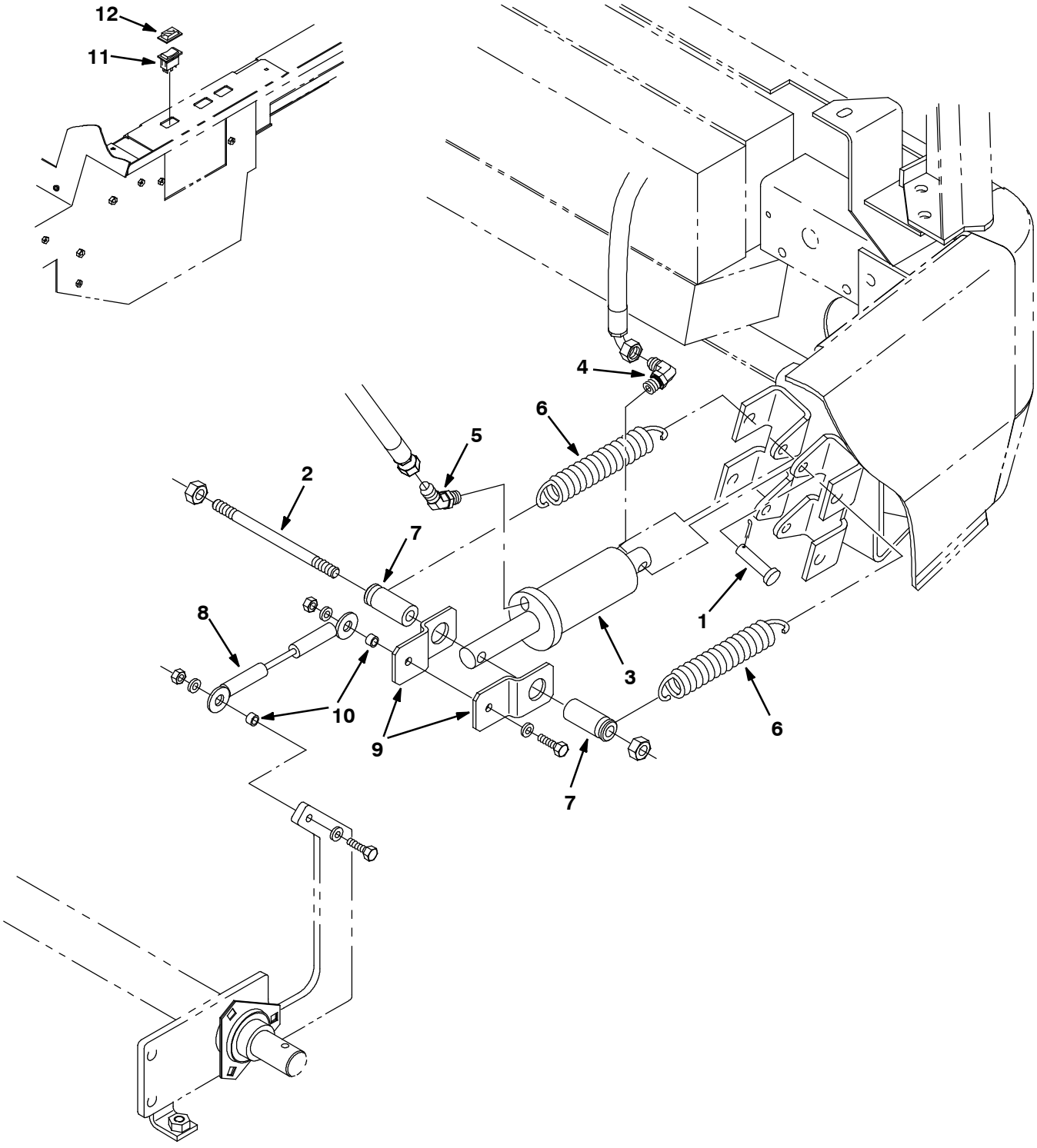

07579 - 800

Fig. 85 - Main Brush Lift Group

Ref.	Part No.	Serial Number	Description	Qty.
1	51534	(004000-)	Pin,Clevis,0.50 Dia.X 2.00 Lg	1
2	1012657	(004000-)	Rod, Thrd, 2 End .50- 13 05.75	1
3	1038176	(004000-)	Cylinder, Hyd, 2.0b 08.0l 04.00strk 2500	1
4	77097	(004000-)	Ftg- Hyd E90 Jm04/Om04	1
5	34359	(004000-)	Ftg- Hyd E45 Jm04/Om04	1
6	33404	(004000-)	Spring, Tension	2
7	1012656	(004000-)	Tube, Mach, Retainer, Spring , 1.0d 1.7l	2
8	64233	(004000-)	Cable, Lift, Main Brush	1
9	65248	(004000-)	Bracket, Brush Lift, Main	2
10	65249	(004000-)	Tube, Spacer, Brush Lift	2
11	61969	(004275-)	Switch, Rocker, Dpdt	1
12	57807	(004275-)	Cover, Rocker Switch Seal	1

Fig. 86 - Main Brush Adjustment Group

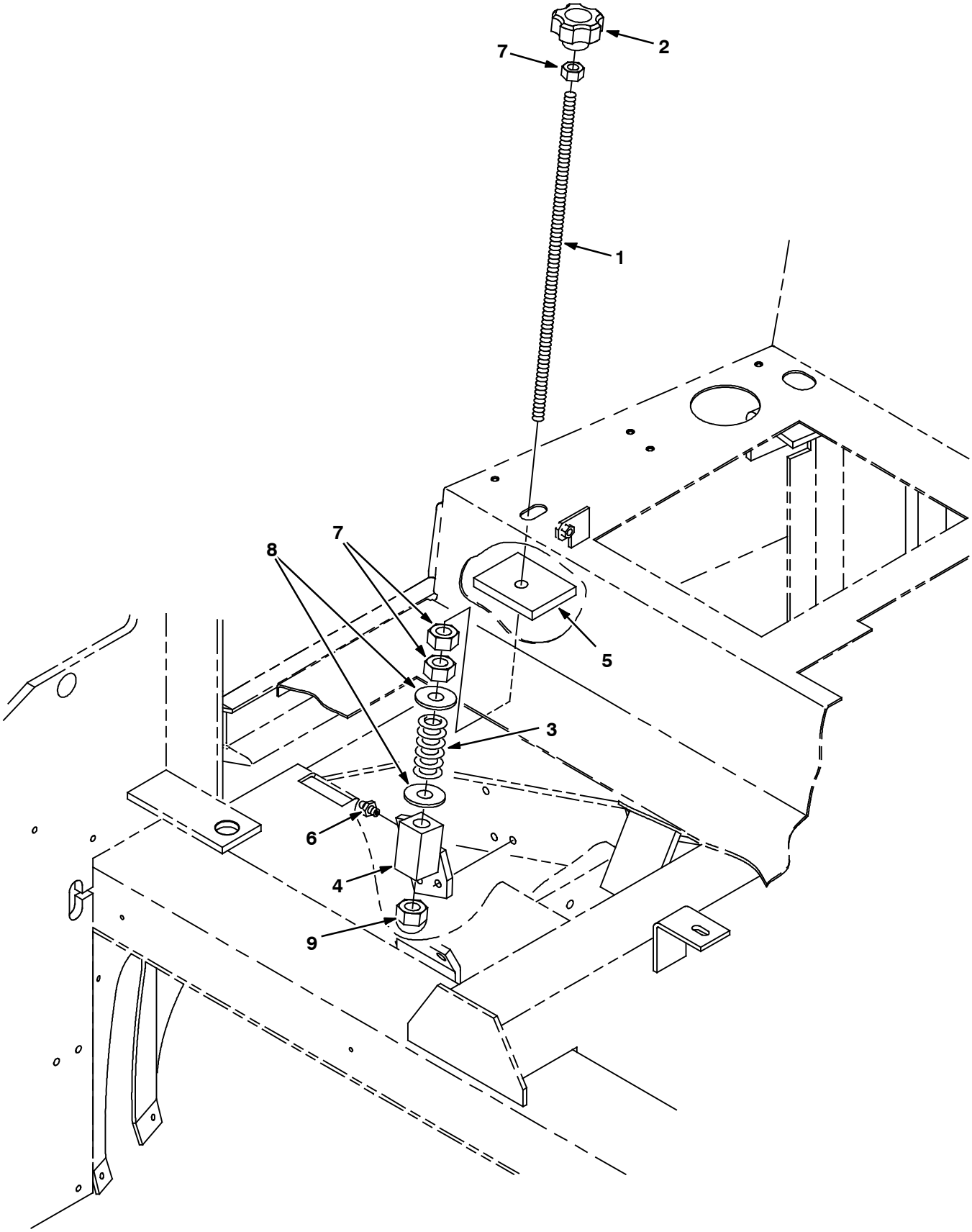

09816 - ALL

Fig. 86 - Main Brush Adjustment Group

Ref.	Part No.	Serial Number	Description	Qty.
1	77578	(004000-)	Rod, Thread	1
2	77605	(004000-)	Knob, Plastic	1
3	51693	(004000-)	Sprng,Comp,0.87Idx.10Wire 2.5L	1
4	77580	(004000-)	Plate, Adj, Brush	1
5	79028	(004000-)	Seal, Rod, Adjuster	1
6	11716	(004000-)	Ftg, Grease.12 Npt 45 .88L	1
7	77583	(004000-)	Nut, Hex, Std, .62- 18	3
8	15331	(004000-)	Washer, Flat, 0.62, Sae	2
9	41131	(004000-)	Nut, Low Crown, .62- 18	1

Fig. 87 - Vacuum Fan Impeller Group

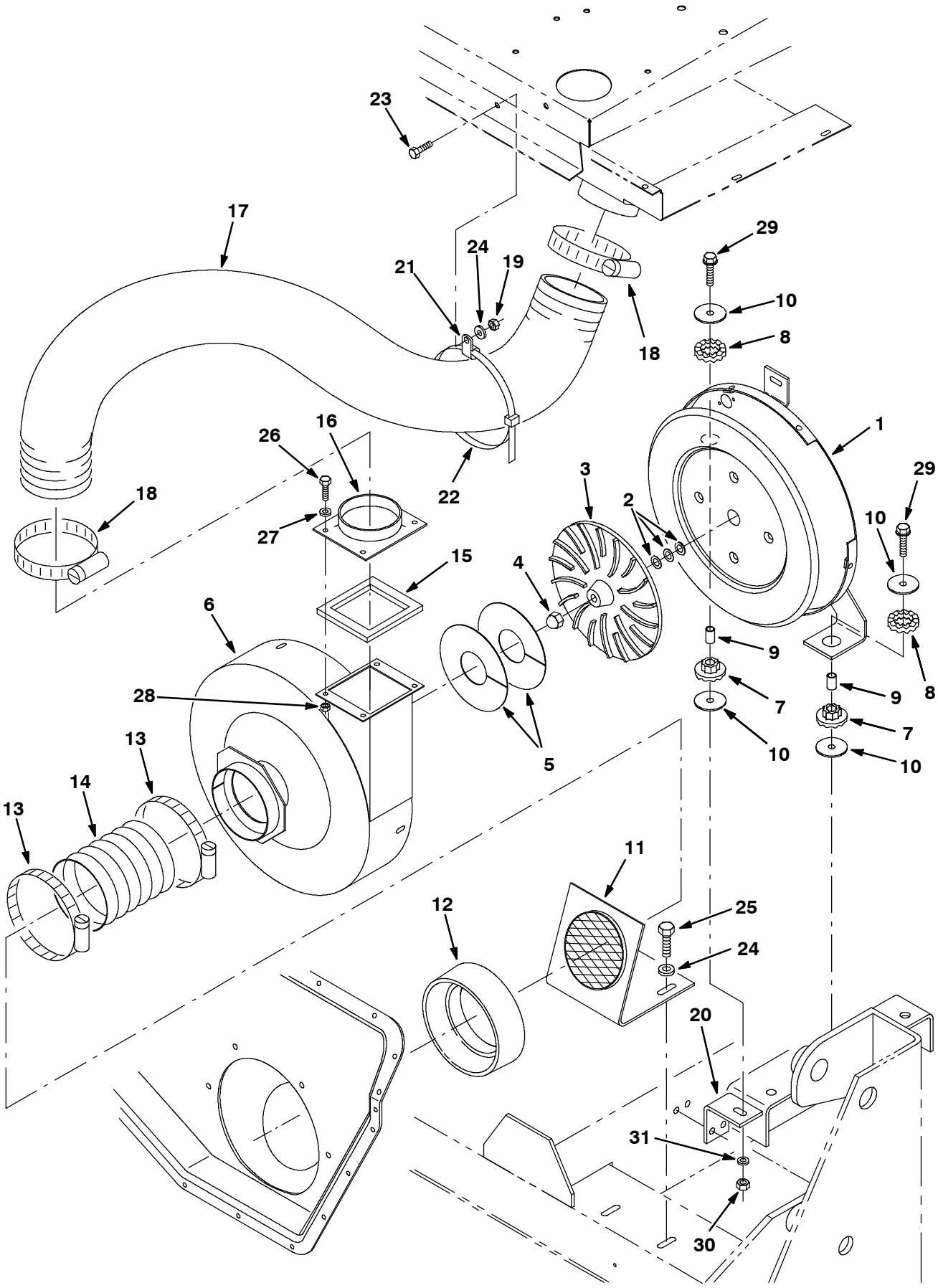

07590 - ALL

Fig. 87 - Vacuum Fan Impeller Group

Ref.	Part No.	Serial Number	Description	Qty.
1	77531	(004000- 008108)	Housing Wldt, Vac Fan, Rear	1
1	1074357	(008109-)	Housing Wldt, Vac Fan, Rear	1
2	75456	(004000-)	Shim .003Th 0.88Odx0.506Id	1
2	75456- 1	(004000-)	Shim .005Th 0.88Odx0.506Id	1
2	75456- 2	(004000-)	Shim .010Th 0.88Odx0.506Id	1
2	75456- 3	(004000-)	Shim .020Th 0.88Odx0.506Id	3
2	75456- 4	(004000-)	Shim .060Th 0.880Dxo.506Id	3
3	03922	(004000-)	Impeller 9.5 Dia. 18 Blade Mac	1
4	41130	(004000-)	Nut- Low Crown .50- 20 Pltd	1
5	58114	(004000-)	Fan, Repair Kit, Reassembly	1
6	77532	(004000-)	Housing Wldt, Vac Fan, Front	1
7	64621	(004000-)	Bushing, Isolator	2
8	64618	(004000-)	Ring, Isolator, Outer Rbr	2
9	64299	(004000-)	Spacer	2
10	58228	(004000-)	Plate, Spring - Side Brush	4
11	70825	(004000-)	Bracket Wldt, Fan Inlet	1
12	21241	(004000-)	Gasket Kit, Vacfan, Replmt [800l]	1
13	73685	(004000-)	Clamp- Wormdrive, 3.62- 5.50D	2
14	73646	(004000-)	Hose, Fan Inlet	1
15	73650	(004000-)	Insulation, Acoustic, Fan	1
16	77553	(004000-)	Plate, Vac Fan	1
17	40870- 8	(004000-)	Hose&cuff Assy, Vinyl4.0Idx50	1
18	23498	(004000-)	Clamp- Wormdrive, 2.63- 4.50D	2
19	08709	(004000-)	Nut, Hex, Lock, M8 X 1.25, Nl	1
20	375721	(004380-)	Bracket, Angle	1
21	69234	(004000-)	Clamp, Cable, Stl, 1.00d X 0.75w, 1h	1
22	763113	(004000-)	Tie, Cable, 20.0l, 6.00d Max	1
23	16931	(004000-)	Screw, Hex, M8 X 1.25 X 20, 8.8	1
24	32491	(004000-)	Washer, Flat, 0.31 Std	3
25	76570	(004000-)	Screw, Hex, M8 X 1.25 X 30, 8.8	2
26	06943	(004000-)	Screw, Hex, M6 X 1.0 X 20, 8.8	4
27	32483	(004000-)	Washer, Flat, 0.25, Sae	4
28	08708	(004000-)	Nut, Hex, Lock, M6 X 1.00, Nl	4
29	16930	(004000-)	Screw, Hex, M10 X 1.5 X 50, 8.8	2
30	41430	(004000-)	Nut, Hex, Lock, M10 X 1.5, Nl	2
31	32492	(004000-)	Washer, Flat, 0.38, Std	2

Fig. 88 - Vacuum Fan Motor Group

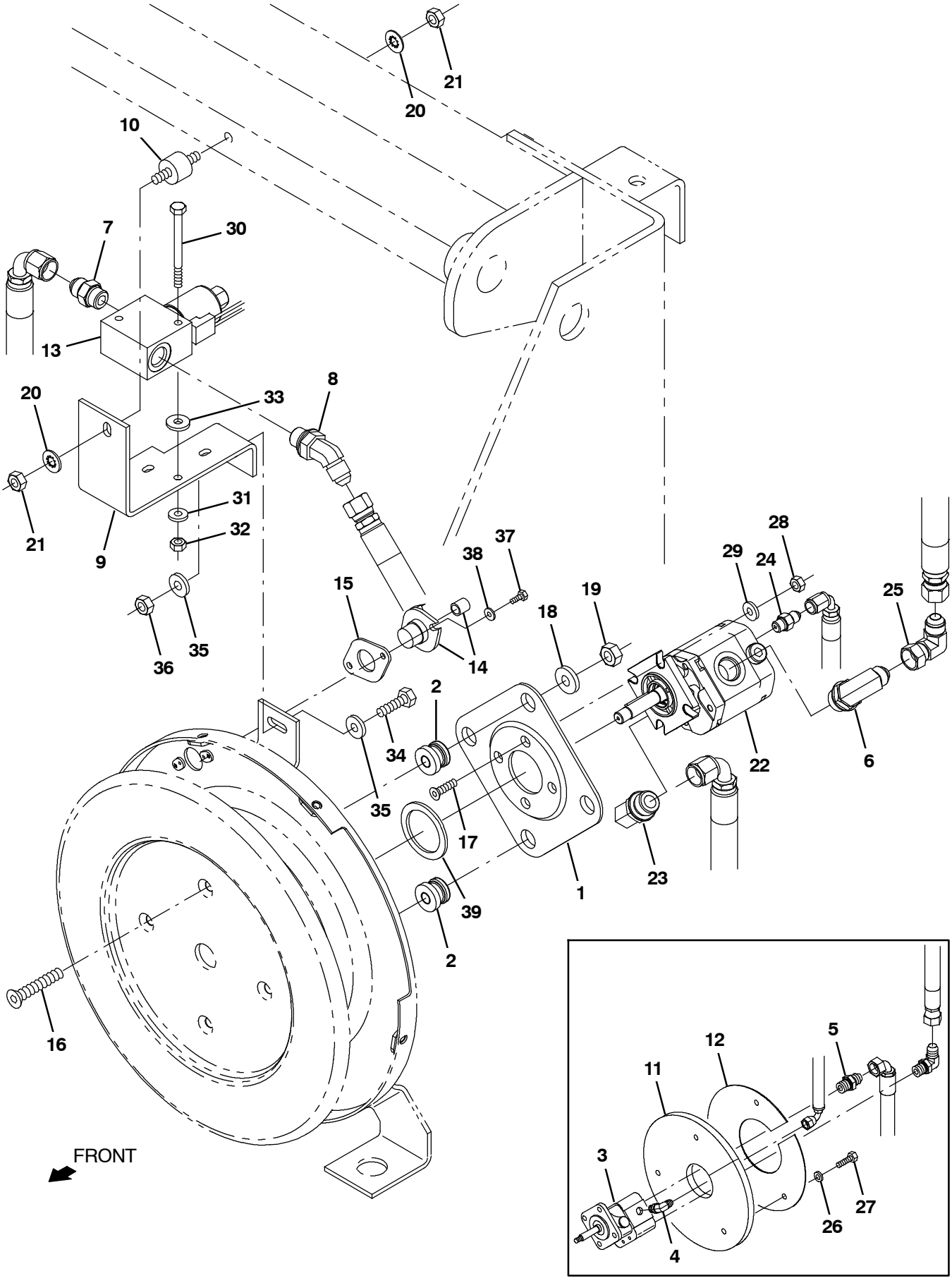

07607

Fig. 88 - Vacuum Fan Motor Group

Ref.	Part No.	Serial Number	Description	Qty.
1	54275A	(004000-)	Bracket, Mounting Motor	1
2	54274	(004000-)	Isolator- Vibration,60 Lb.Ratng	4
3	19117	(004000- 008108)	Motor- Hyd Gear Ex (See Breakdowns)	1
4	77097	(004000- 008108)	Fitting, Hyd, E90, Jm04/Om04	1
5	56692	(004000- 008108)	Fitting, Hyd, Str, Jm08/Om10	1
6	56821	(004000-)	Fitting, Hyd, E90, Jm08/Om10	1
7	44869	(004000-)	Fitting, Hyd, Str, Jm08/Om08	1
8	42226	(004000-)	Fitting, Hyd, E45, Jm08/Om08	1
9	70775	(004000-)	Bracket, Mtg, Valve	1
10	05611	(004000-)	Isolator, Vibration	1
11	70810	(004000- 008108)	Insulation, Acoustic, Vac Fan	1
12	70790	(004000- 008108)	Plate, Retainer, Foam	1
13	84015	(004000- 007338)	Valve- Hyd, Solenoid (See Breakdowns)	1
13	1049210	(007339-)	Valve, Cntrl, Hyd, Solenoid, 12vdc 12gpm (See Breakdowns)	1
14	02712	(000000- 008014)	Sensor Assy, Thermal	1
14	9012095	(008015-)	Sensor Assy, Thermal	1
15	82733	(004000-)	Gasket, Fire Switch	1
16	54862	(004000-)	Screw, Flt, Soc, .38- 16 X 1.75, Al	4
17	39534	(004000-)	Screw, Flt, Soc, .25- 20 X 1.00, Al	4
18	13248	(004000-)	Washer, Flat, 0.40b 1.12d .12, Stl, Pl	4
19	50902	(004000-)	Nut, Hex, Lock, .38- 16, Nl	4
20	32984	(004000-)	Washer, Lock, Int, 0.31	2
21	19313	(004000-)	Nut, Hex, Std, .31- 18	2
22	1071253	(008109-)	Motor, Hyd, Gear, Ext 0.17 Lh 3000	1
23	56821	(008109-)	Fitting, Hyd, E90, Jm08/Om10	1
24	55586	(008109-)	Fitting, Hyd, Str, Jm04/Om04	1
25	17980	(008109-)	Fitting, Hyd, E90, Jf08/Jm08	1
26	32490	(004000- 008108)	Washer, Flat, 0.25, Std	3
27	06942	(004000- 008108)	Screw, Hex, M6 X 1.00 X 16, 8.8	3
28	32981	(004000-)	Nut, Hex, Lock, .25- 20, Nl	4
29	32483	(004000-)	Washer, Flat, 0.25, Sae	4
30	06952	(004000-)	Screw, Hex, M6 X 1.00 X 90, 8.8	2
31	19066	(004000-)	Washer, Flat, 0.25b 0.56d .05, Pl, 10	4
32	08708	(004000-)	Nut, Hex, Lock, M6 X 1.00, Nl	2
33	63416	(004000-)	Washer, Flat, 0.31b 0.88d .12, Rbr	2
34	76570	(004000-)	Screw, Hex, M8 X 1.25 X 30, 8.8	1
35	32491	(004000-)	Washer, Flat, 0.31, Std	2
36	08709	(004000-)	Nut, Hex, Lock, M8 X 1.25, Nl	1
37	09206	(004000-)	Screw, Hex, M4 X 0.70 X 12, 8.8	2
38	19065	(004000-)	Washer, Flat, 0.19b 0.44d .05, Pl, 08	2
39	80392	(008350-)	Gasket, Ure, .13, 1.75id 2.31od	1

Fig. 89 - Steering Group

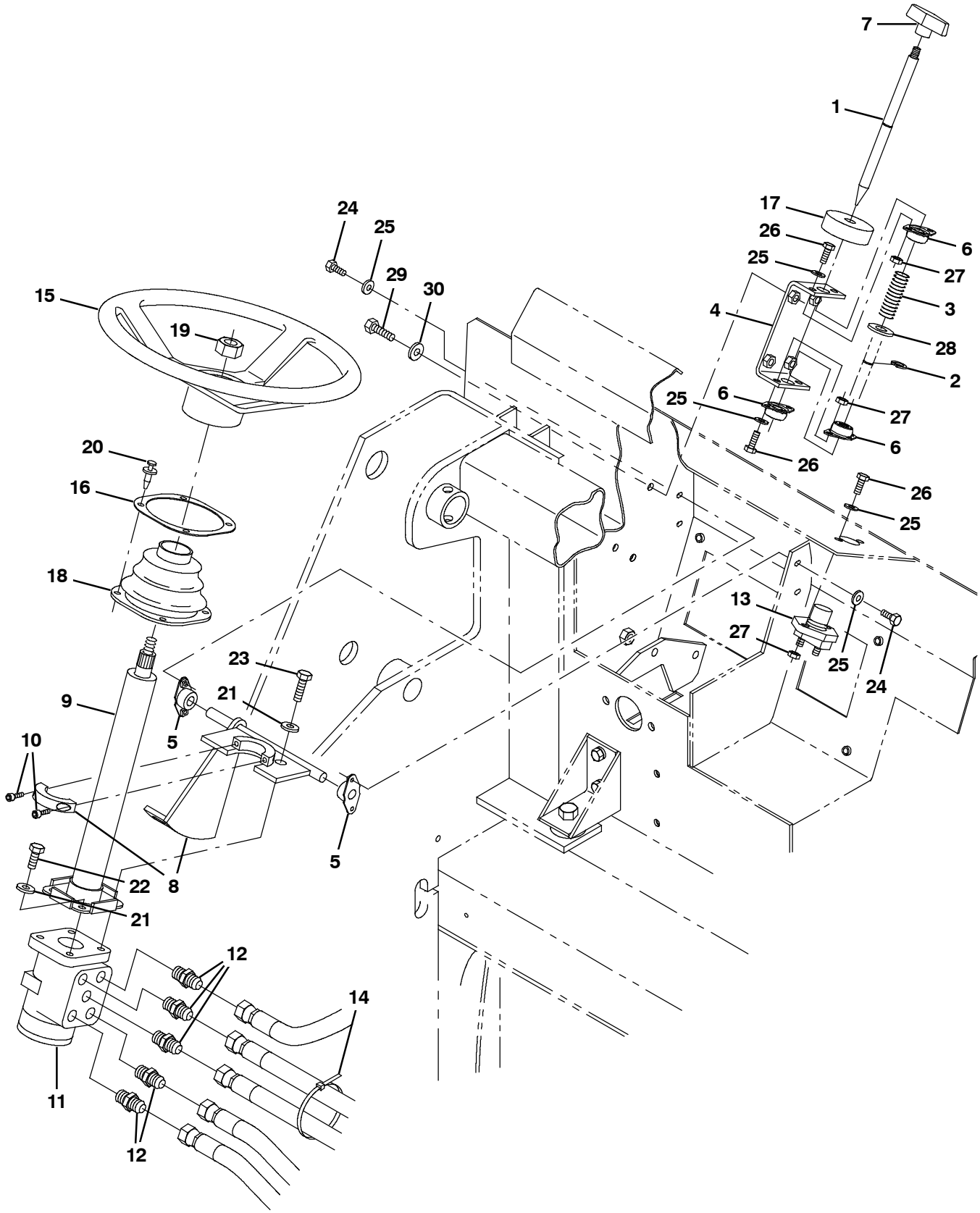

07609 - ALL

Fig. 89 - Steering Group

	Ref.	Part No.	Serial Number		Description	Qty.
	1	64651	(004000-	)	Rod, Latch, Steering, Tilt	1
	2	70717	(004000-	)	Ring,Retain,Ex,0.50Od,Heavy Dt	1
	3	22290	(004000-	)	Sprng,Comp,0.62Idx.06Wire 2.3L	1
	4	64655	(004000-	)	Channel, Mtg, Steering Latch	1
	5	70709	(004000-	)	Bearing, Flange .500B	2
	6	47585	(004000-	)	Bearing- Flange,2 Hole 0.50Bore	3
	7	04706	(004000-	)	Handle, Lift, Brush	1
	8	64586	(004000-	)	Bracket Wldt, Steering Tilt	1
▽	9	64631	(004000-	)	Column, Steering 12”	1
▲		74142	(004000-	)	Boot	1
	10	21195	(004000-	)	Scr Hex .38- 16X0.75	2
	11	65242	(004000-	)	Steer Control, Hyd (See Breakdowns)	1
	12	56690	(004000-	)	Ftg- Hyd Str Jm06/Om06	5
	13	44078	(004000-	)	Switch, Pushmom, Spst100A 12V	1
	14	49263	(004000-	)	Tie, Cable 3.00D Max 11.41Lg	3
▽	15	56398	(004000- 007673	)	Wheel, Steering	1
▲		70218	(004000- 007673	)	Cap, Wheel, Steering	1
▲		70219	(004000- 007673	)	Insert, Wheel, Steering	1
▽	15	1058996	(007674-	)	Wheel, Steering, 14.0d 0.81b 36tooth	1
▲		768482	(007674-	)	Cover, Wheel, Steering	1
	16	70623	(004000-	)	Plate, Mtg, Steering Boot	1
	17	75968	(004000-	)	Seal, Bearing	1
	18	70622	(004000-	)	Seal, Boot, Steering Column	1
	19	56185	(004000-	)	Nut- hx Jam M20x1.5 4 Pltd	1
	20	72970	(004000-	)	Rivet, Plastic .250Dx.898	4
	21	32485	(004000-	)	Washer, Flat, 0.38, Sae	4
	22	27988	(004000-	)	Screw, Hex, .38- 16 X 1.50, G5	2
	23	21195	(004000-	)	Screw, Hex, .38- 16 X 0.75, G5	2
	24	11329	(004000-	)	Screw, Hex, M6 X 1.00 X 16, Nl, Ss	4
	25	19066	(004000-	)	Washer, Flat, 0.25b 0.56d .05, Pl, 10	14
	26	06943	(004000-	)	Screw, Hex, M6 X 1.00 X 20, 8.8	4
	27	08708	(004000-	)	Nut, Hex, Lock, M6 X 1.00, Nl	6
	28	32486	(004000-	)	Washer Flat,0.50,Sae	1
	29	39277	(004000-	)	Screw, Hex, M8 X 1.25 X 25, 8.8	3
	30	41186	(004000-	)	Washer, Flat, Belleville, .31	3

Fig. 90 - Electrical Instrument Panel Assembly

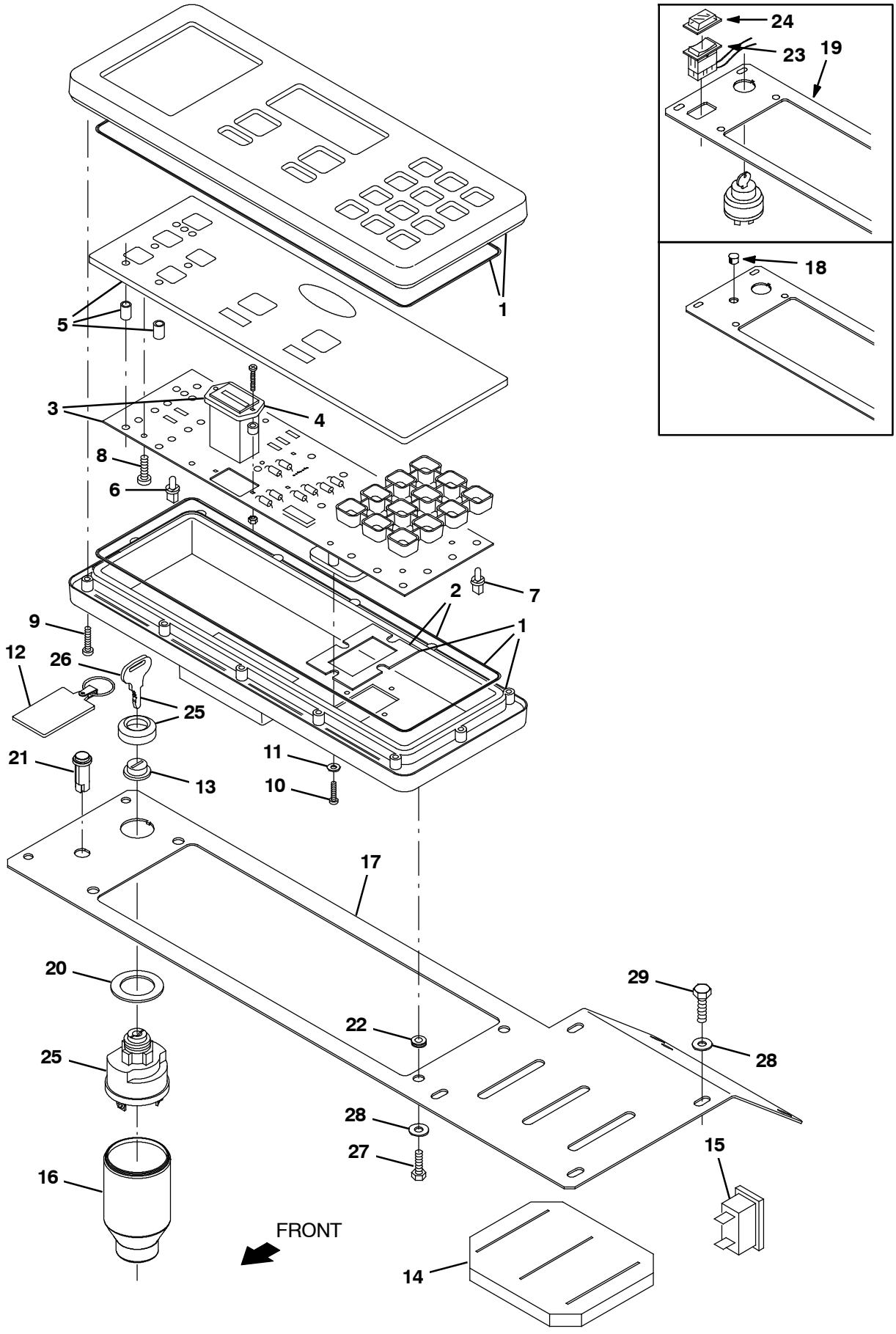

09907 - G, LP

Fig. 90 - Electrical Instrument Panel Assembly

	Ref.	Part No.	Serial Number	Description	Qty.
▽		59970	(004000-)	Replm Kit, Instr Panel	1
▲	1	59976	(004000-)	Replm Kit, Case	1
▲	2	59977	(004000-)	Replm Kit, Seal	1
▲▽	3	59974	(004000-)	Replm Kit, Cir Board	1
▲▲	4	59978	(004000-)	Replm Kit, Hourmeter	1
▲	5	59979	(004000-)	Replm Kit, Touch Panel	1
▲	6	59971	(004000-)	Replm Kit, Lamp, Backlighting (Set of 8)	2
▲	7	56346	(004000-)	Replm Kit, Lamp, Fault (Set of 8)	1
▲	8	06932	(004000-)	Screw, Pan, Phl, M5 X 0.80 X 10, 4.8	8
▲	9	06928	(004000-)	Screw, Pan, Phl, M4 X 0.70 X 20, 4.8	12
▲	10	06921	(004000-)	Screw, Pan, Phl, M3 X 0.50 X 16, 4.8	4
▲	11	02892	(004000-)	Washer, Flat, 0.12b 0.38d .03, Stl, Pl	4
	12	1075003	(004000-)	Keychain, Rectangle, Parts & Service	1
	13	382516	(004000-)	Boot, Switch	1
	14	79648	(004000-)	Seal, Handle, Valve	1
	15	64141	(004000-)	Light, Indicator 14V Red 1.2x0.7	1
	16	383165	(004322-)	Boot, Switch, Ignition	1
	17	1012670	(004275- 008088)	Panel, Cover, Dash	1
	17	1073801	(008089-)	Panel, Cover, Instmt [800 Gray]	1
	18	56992	(004275- 005999)	Plugbutton	1
	19	65245	(004000- 004274)	Panel, Cover, Dash	1
	20	73736	(004000-)	Washer	1
	21	1012185	(006000-)	Light, Check Eng, Amb, 14vdc	1
	22	10632- 5	(004000-)	Grommet,Rbr,0.25Id,For .09Matl	4
	23	61969	(004000- 004274)	Switch, Rocker, Dpdt	1
	24	57807	(004000- 004274)	Cover, Rocker Switch Seal	1
▽	25	87536	(004000-)	Switch Ignition	1
▲	26	87866	(004000-)	Key Set,Switch Ku	1
	27	24199	(004000-)	Screw, Hex, M5 X 0.80 X 16, Ss	4
	28	19066	(004000-)	Washer, Flat, 0.25b 0.56d .05, Pl, 10	12
	29	06942	(004000-)	Screw, Hex, M6 X 1.00 X 16, 8.8	8

Fig. 91 - Electrical Circuit Breaker and Relay Group

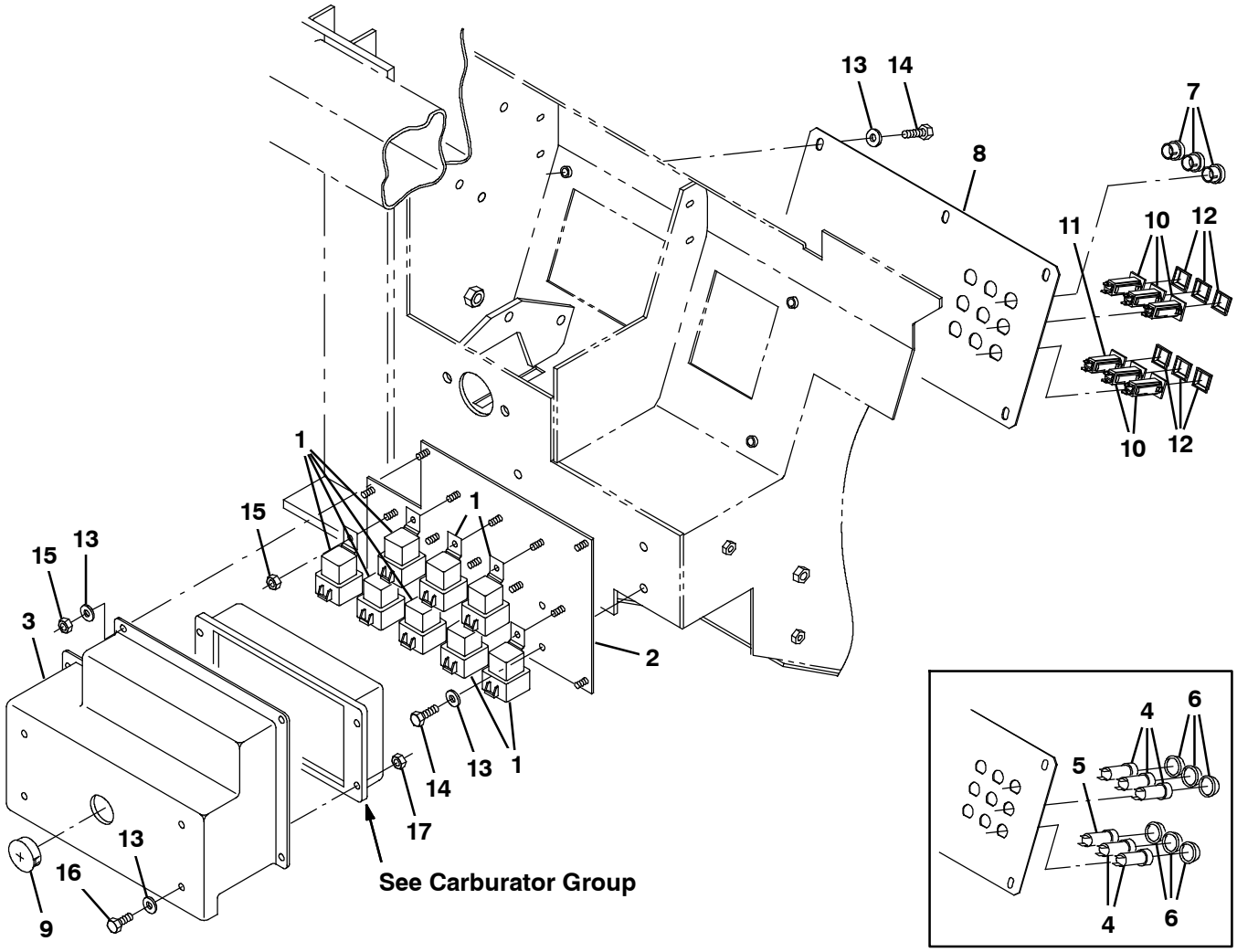

07735 - G, LP

Ref.	Part No.	Serial Number	Description	Qty.
1	56186	(004000-)	Relay, Shrouded, 12 Vdc	8
2	70398	(004000-)	Plate, Mtg, Relay	1
3	70402	(004000-)	Cover, Relay Panel	1
4	57803	(004000- 007289)	Breaker- Circuit, 15 Resetbl	5
5	87583	(004000- 007289)	Breaker- Circuit, 2.5 Resetbl	1
6	57751	(004000- 007289)	Boot- Circuit Breaker	6
7	57167	(004000-)	Plugbtn .62H .03- .12 Blacknyl	3
8	70411	(004000- 008088)	Plate, Circuit Breaker	1
8	1073823	(008089-)	Plate, Circuitbreaker [800 Gray]	1
9	76888	(004000-)	Button, Plug 1.25H	1
10	1064188	(007290-)	Circuitbreaker, 15A, Restable	5
11	1064184	(007290-)	Circuitbreaker, 2.5A, Restable	1
12	1064191	(007290-)	Boot, Circuitbreaker	6
13	19066	(004000-)	Washer, Flat, 0.25b 0.56d .05, Pl, 10	10
14	06943	(004000-)	Screw, Hex, M6 X 1.00 X 20, 8.8	10
15	08708	(004000-)	Nut, Hex, Lock, M6 X 1.00, Nl	10
16	06942	(004000-)	Screw, Hex, M6 X 1.00 X 16, 8.8	4
17	07790	(004000-)	Nut, Hex, Flng, M6 X 1.00	4

Fig. 92 - Electrical Schematic (004000-004936)

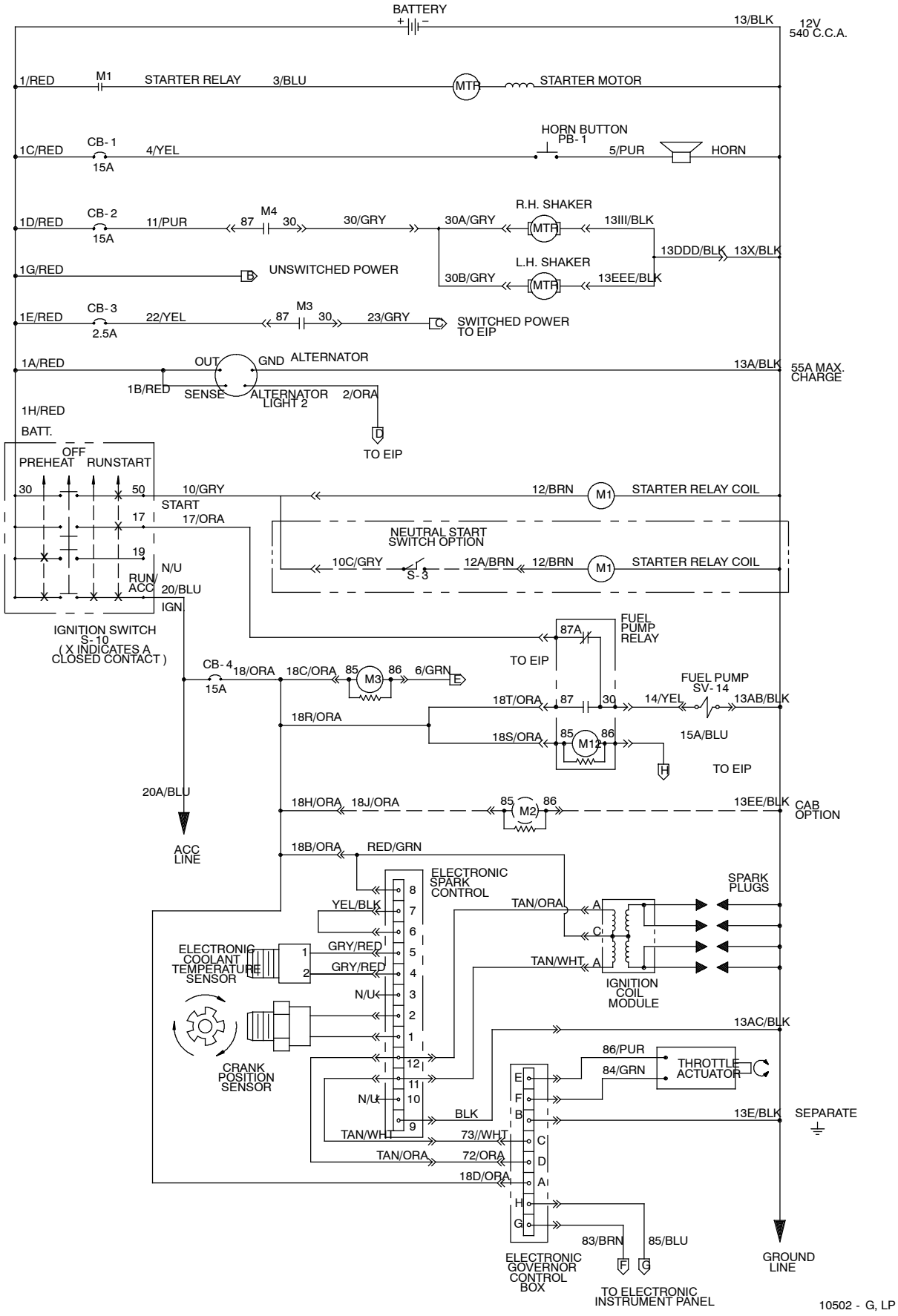

Fig. 92 - Electrical Schematic (004000-004936)

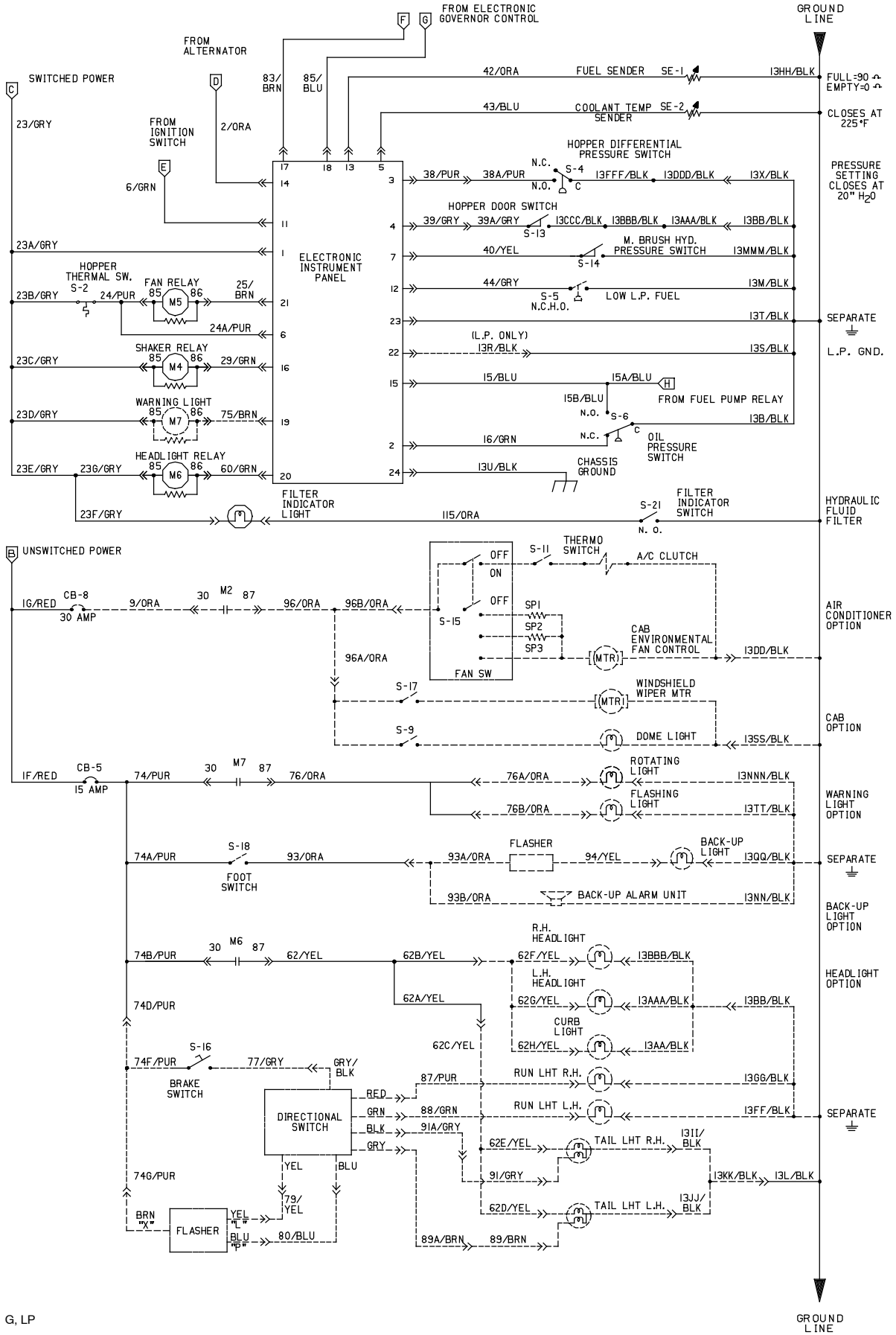

10502 - G, LP

Fig. 92 - Electrical Schematic (004000-004936)

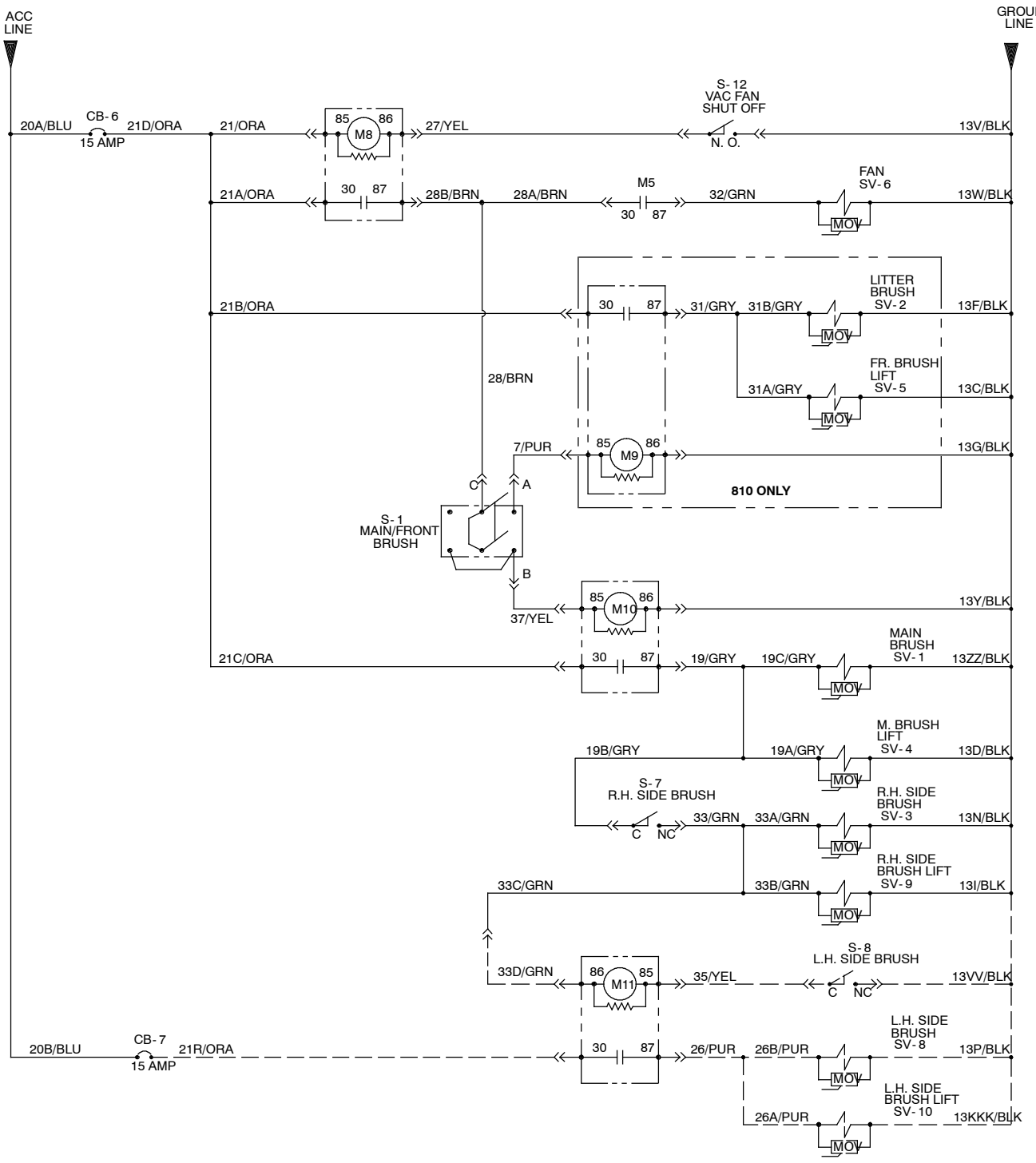

LEGEND			
M	POWER RELAY	HM	HOURMETER
MTR	MOTOR	SV	SOLENOID VALVE
CB	CIRCUIT BREAKER	S	SWITCH
PM	PERMANENT MAGNET	ACC	ACCESSORY
J	JACK- FEM. SOCKET	GND	GROUND CHASSIS
P	PLUG- MALE PIN	C	COMMON
PB	PUSHBUTTON	N.O.	NORMALLY OPEN
VM	VOLTMETER	N.C.	NORMALLY CLOSED
FU	FUSE	NOV	METAL OXIDE VARISTOR

10502 - G, LP

Fig. 92 - Electrical Schematic (004000-004936)

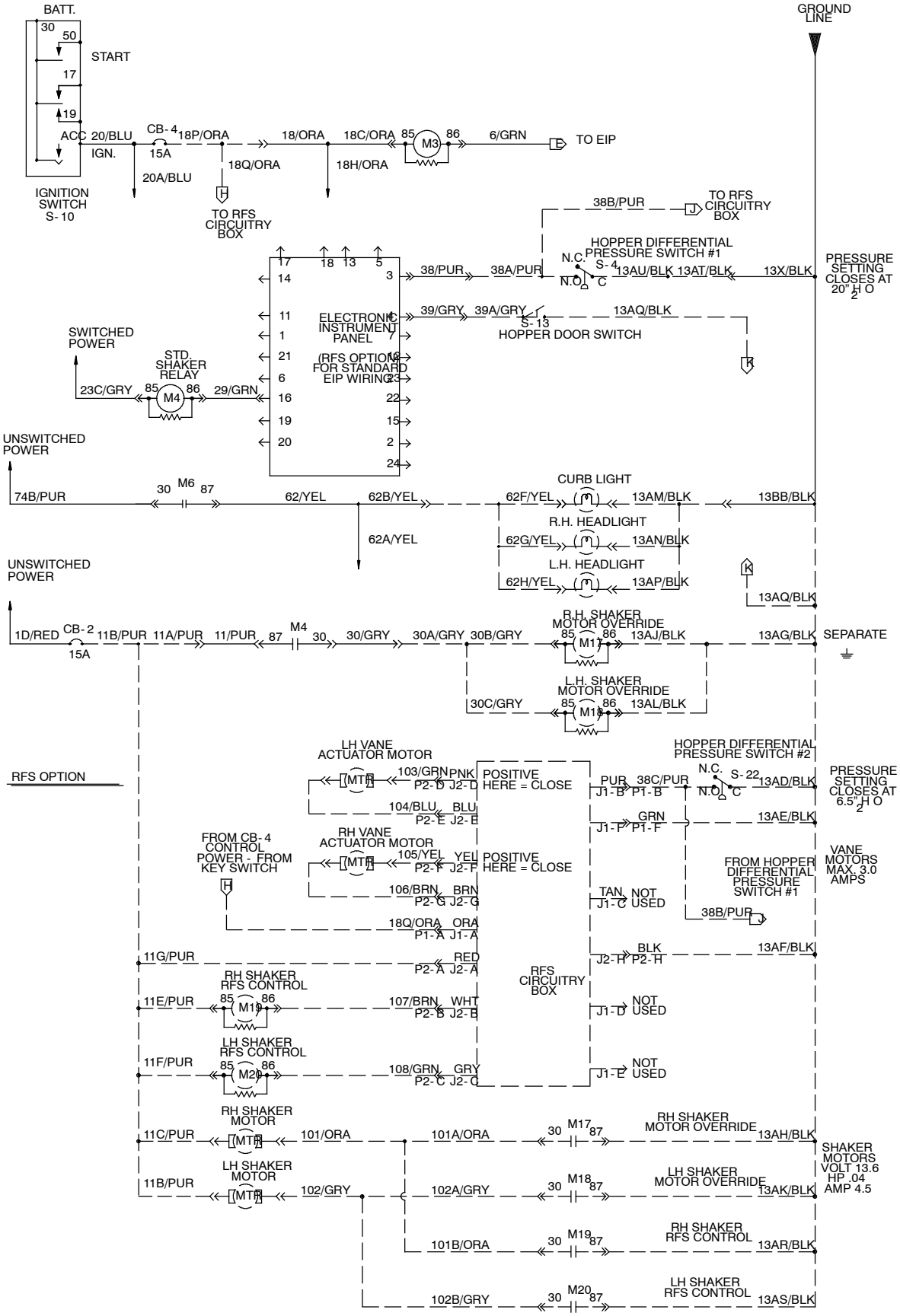

10502 - G, LP

Fig. 93 - Electrical Schematic (004937-005999)

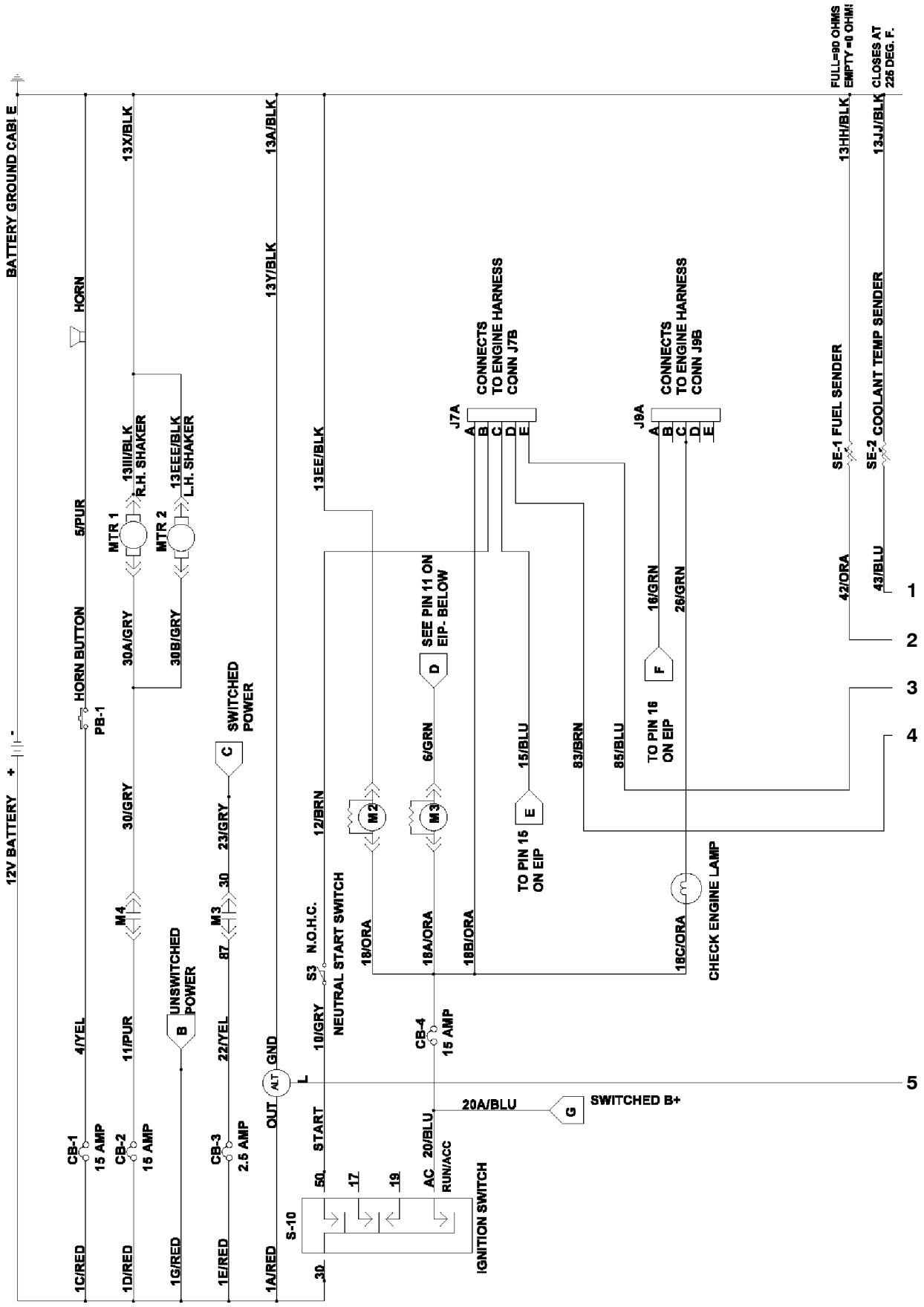

393277 - 800, 810, G, Lp

Fig. 93 - Electrical Schematic (004937- 005999)

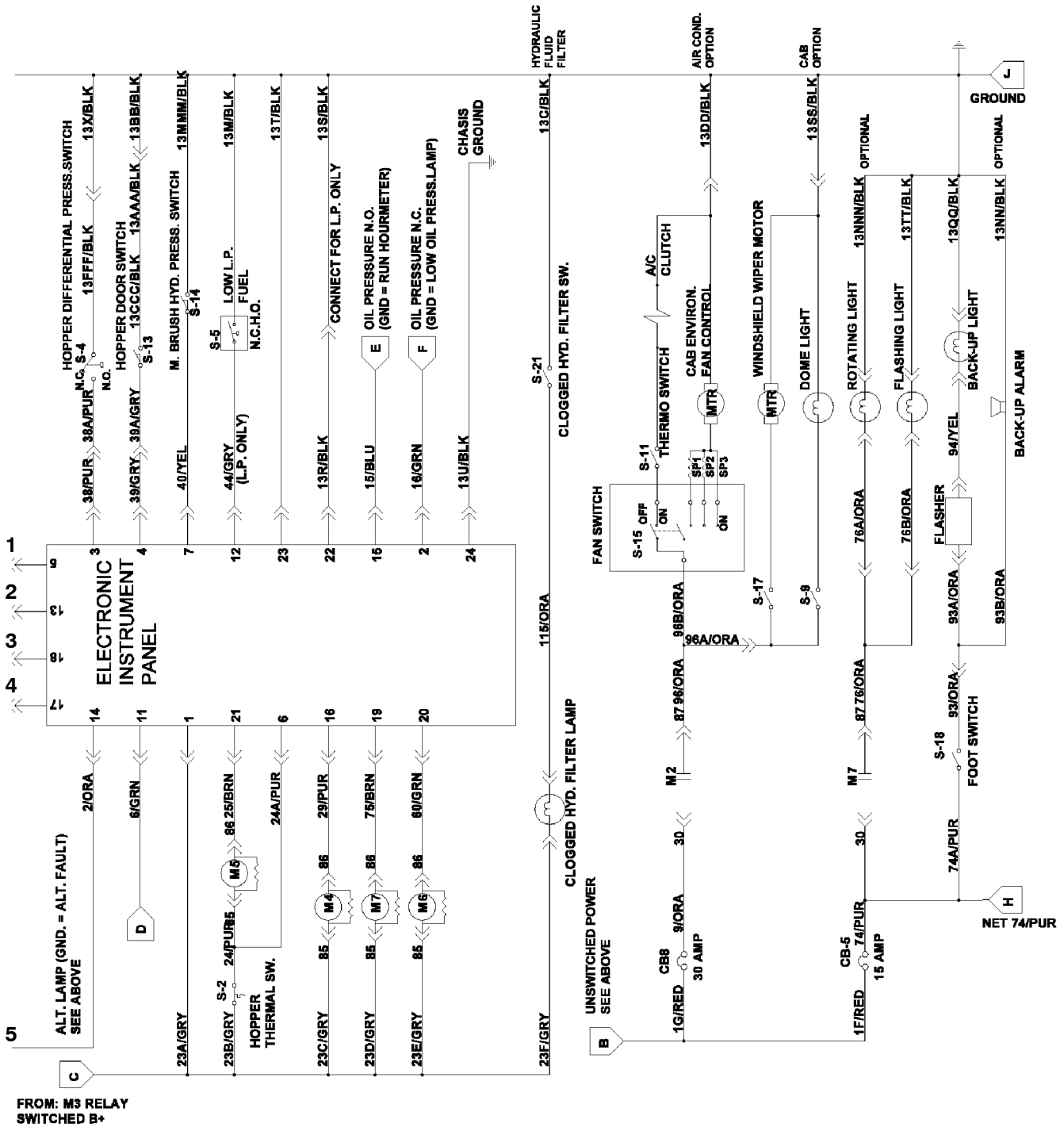

Fig. 93 - Electrical Schematic (004937- 005999)

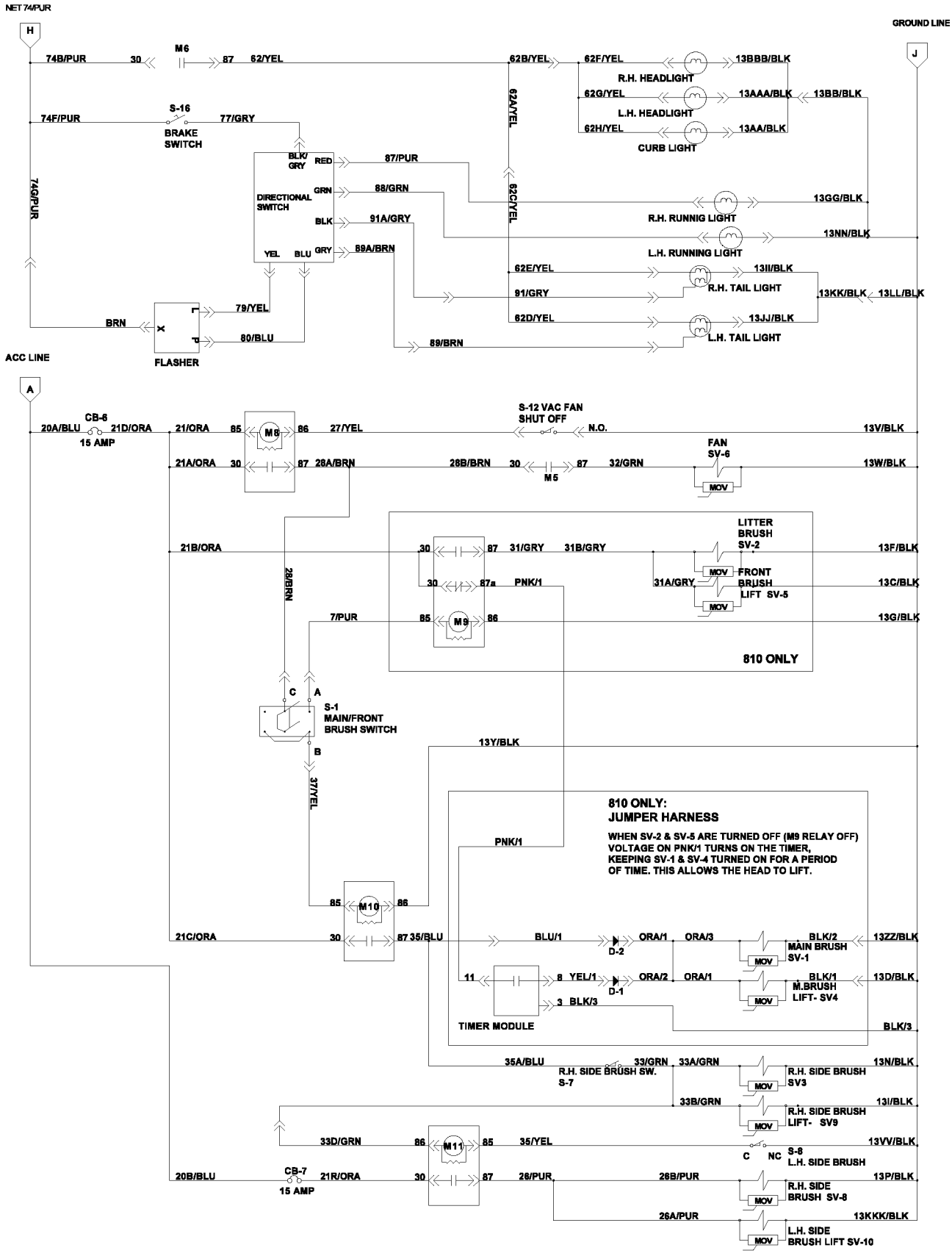

393277 - 800, 810, G, Lp

Fig. 93 - Electrical Schematic (004937- 005999)

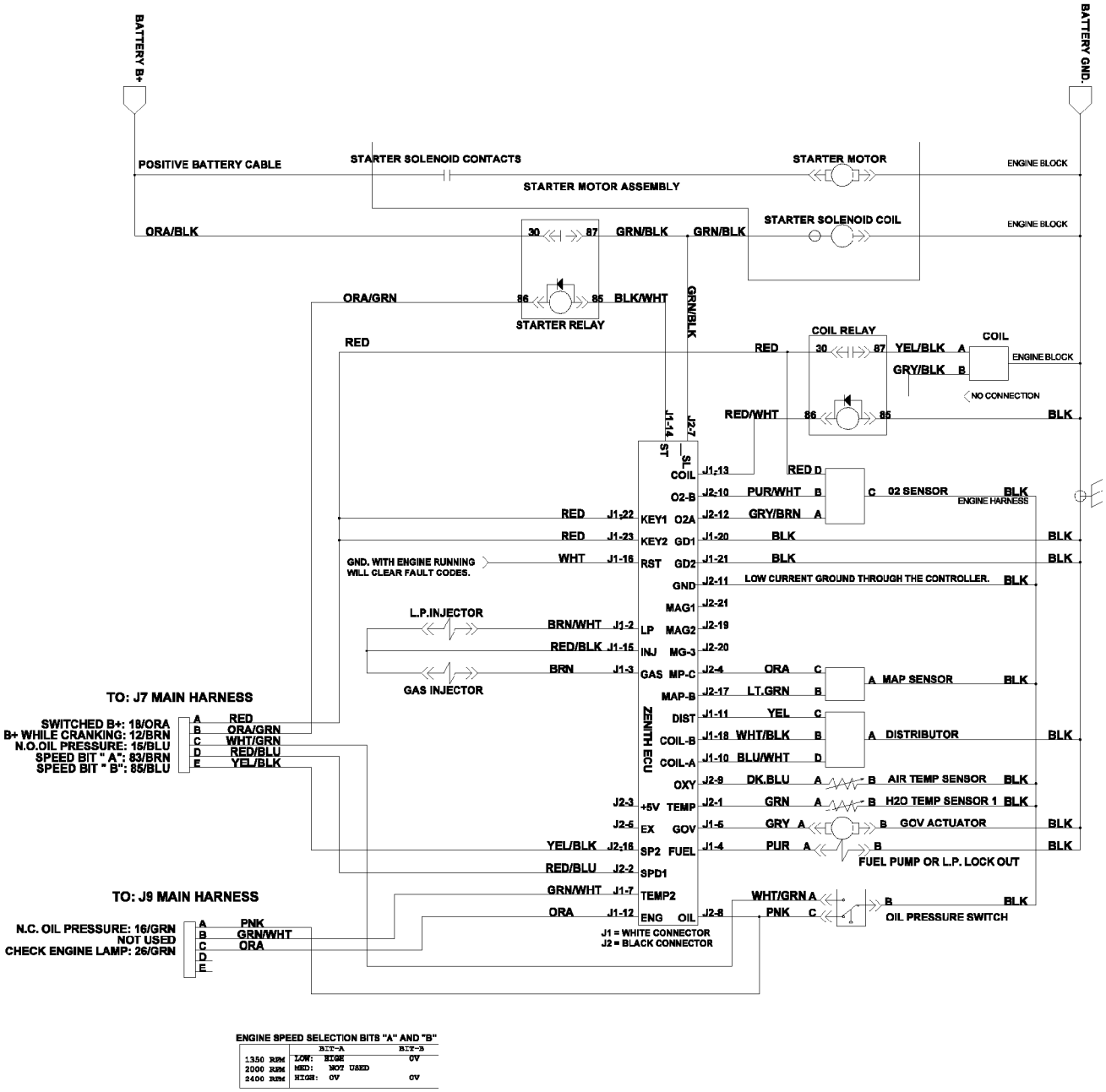

393277 - 800, 810, G, Lp

Fig. 93 - Electrical Schematic (004937- 005999)

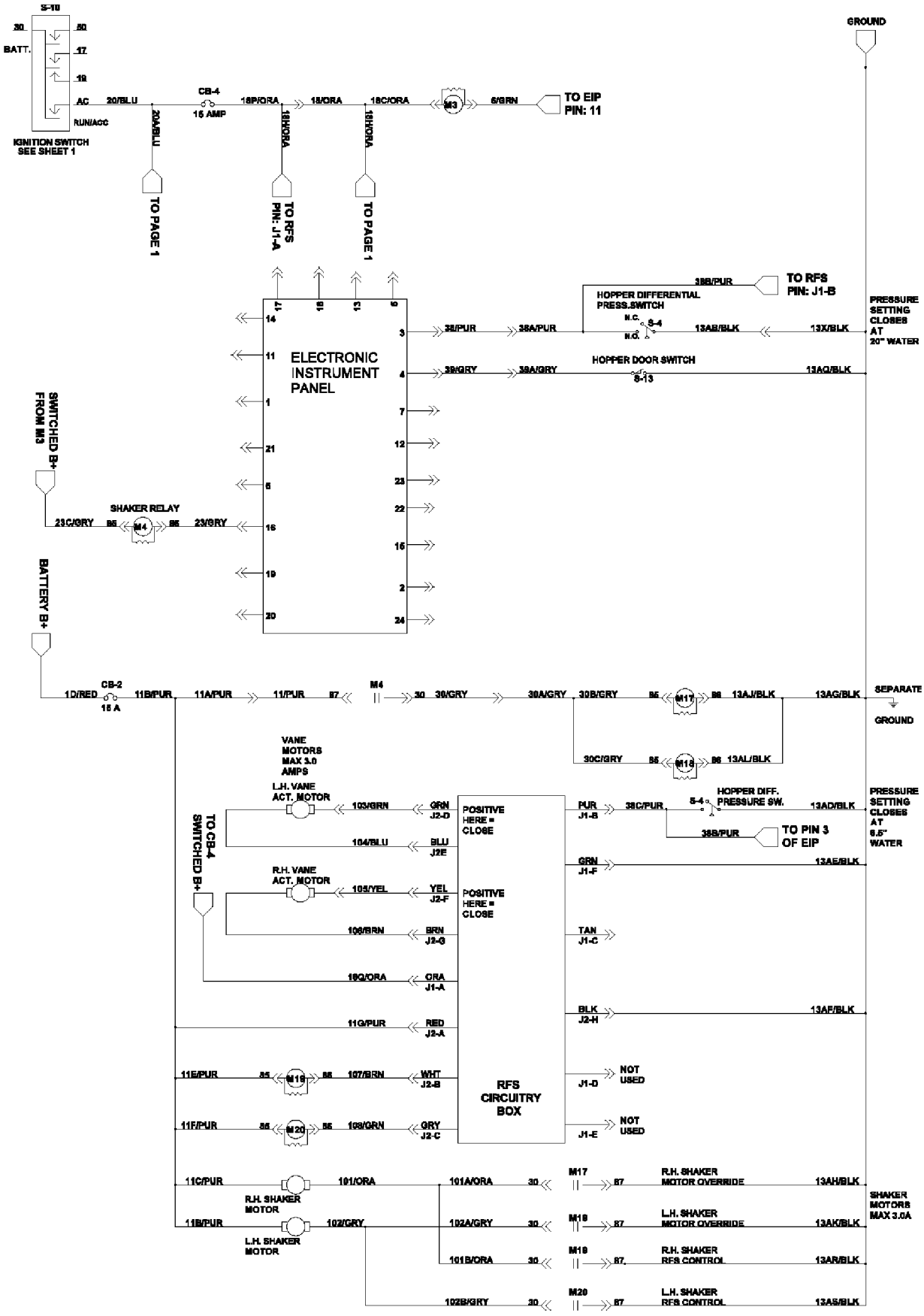

393277 - 800, 810, G, Lp

Fig. 94 - Electrical Schematic (006000-)

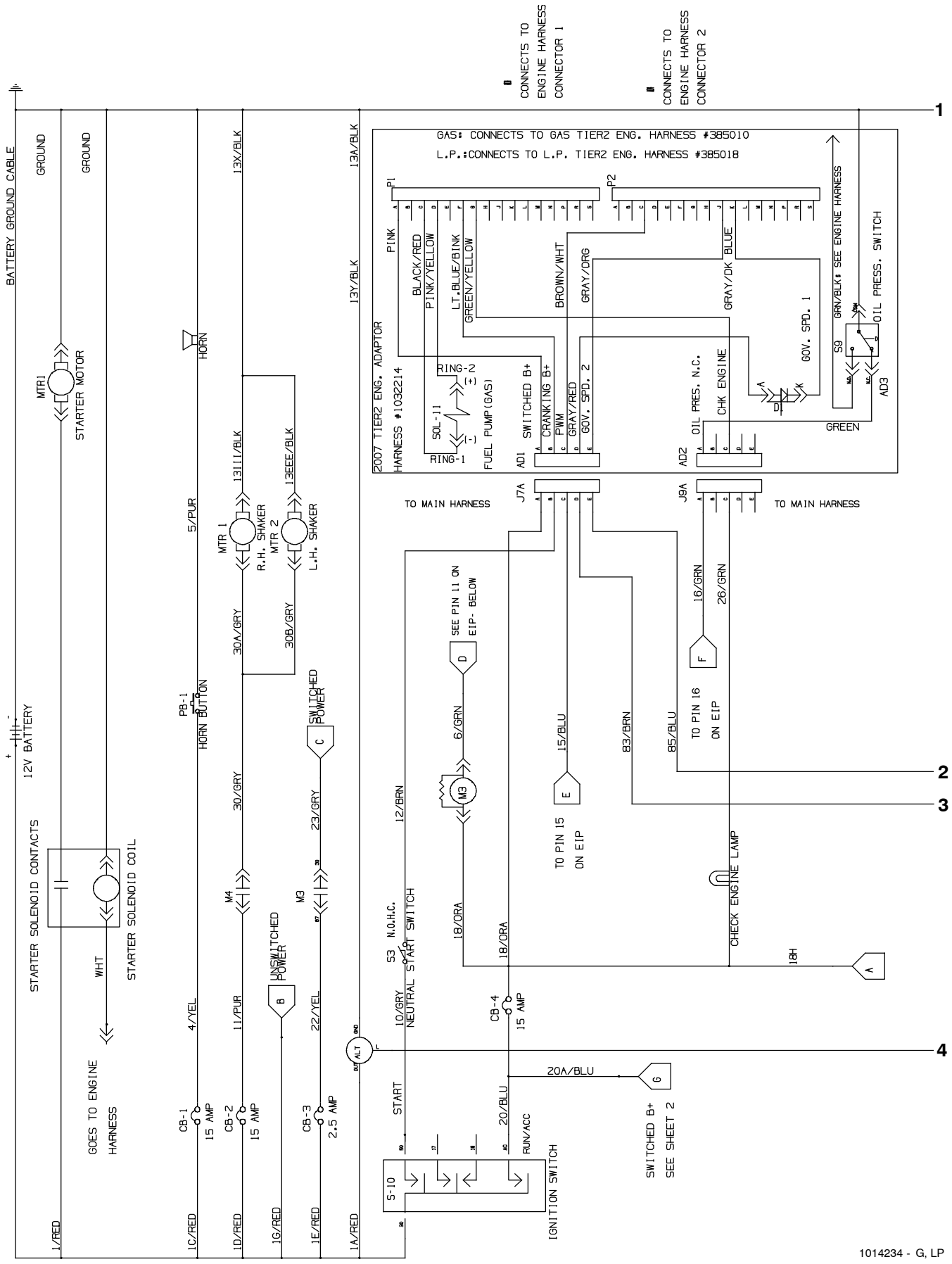

Fig. 94 - Electrical Schematic (006000-)

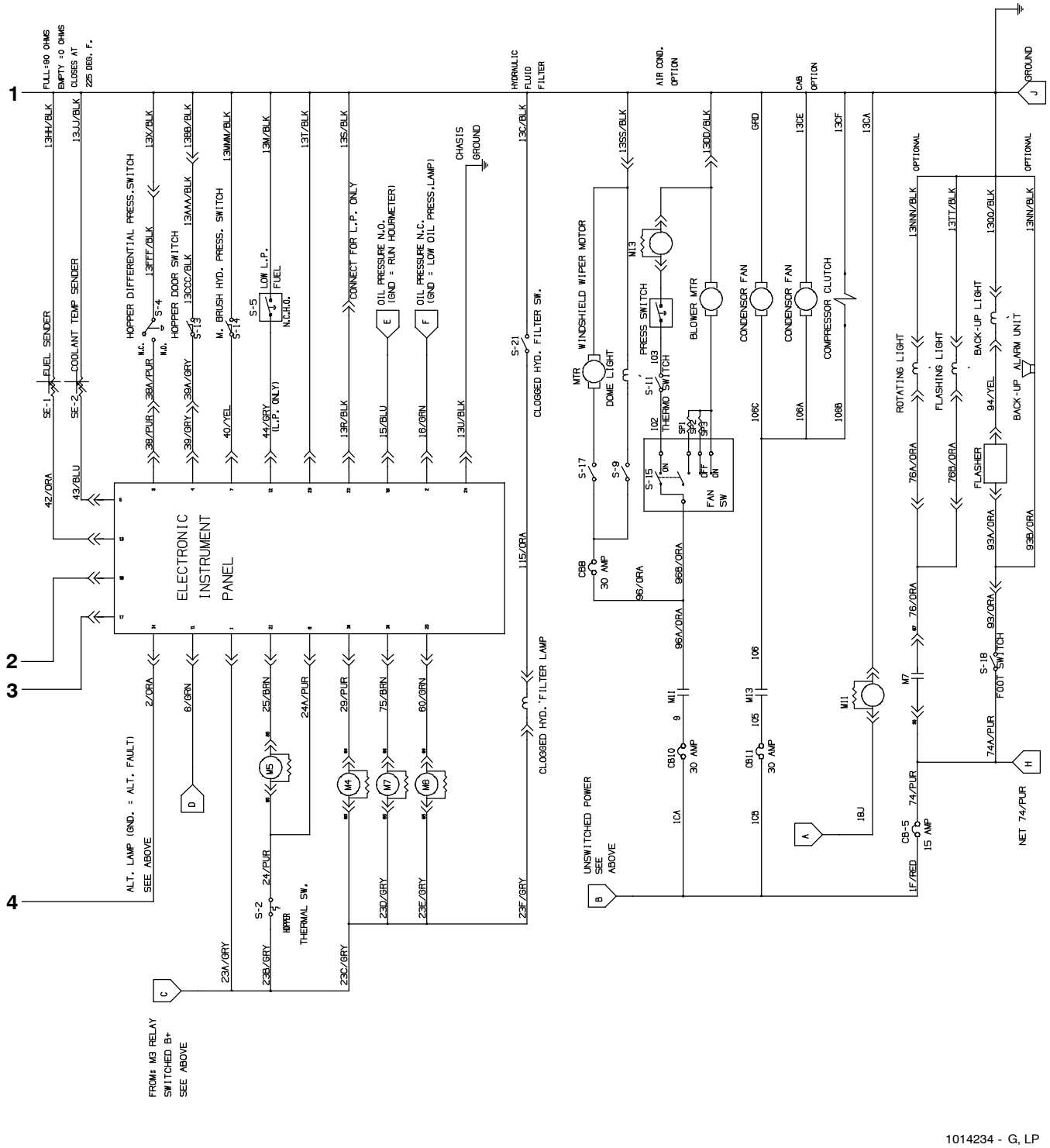

1014234 - G, LP

Fig. 94 - Electrical Schematic (006000-)

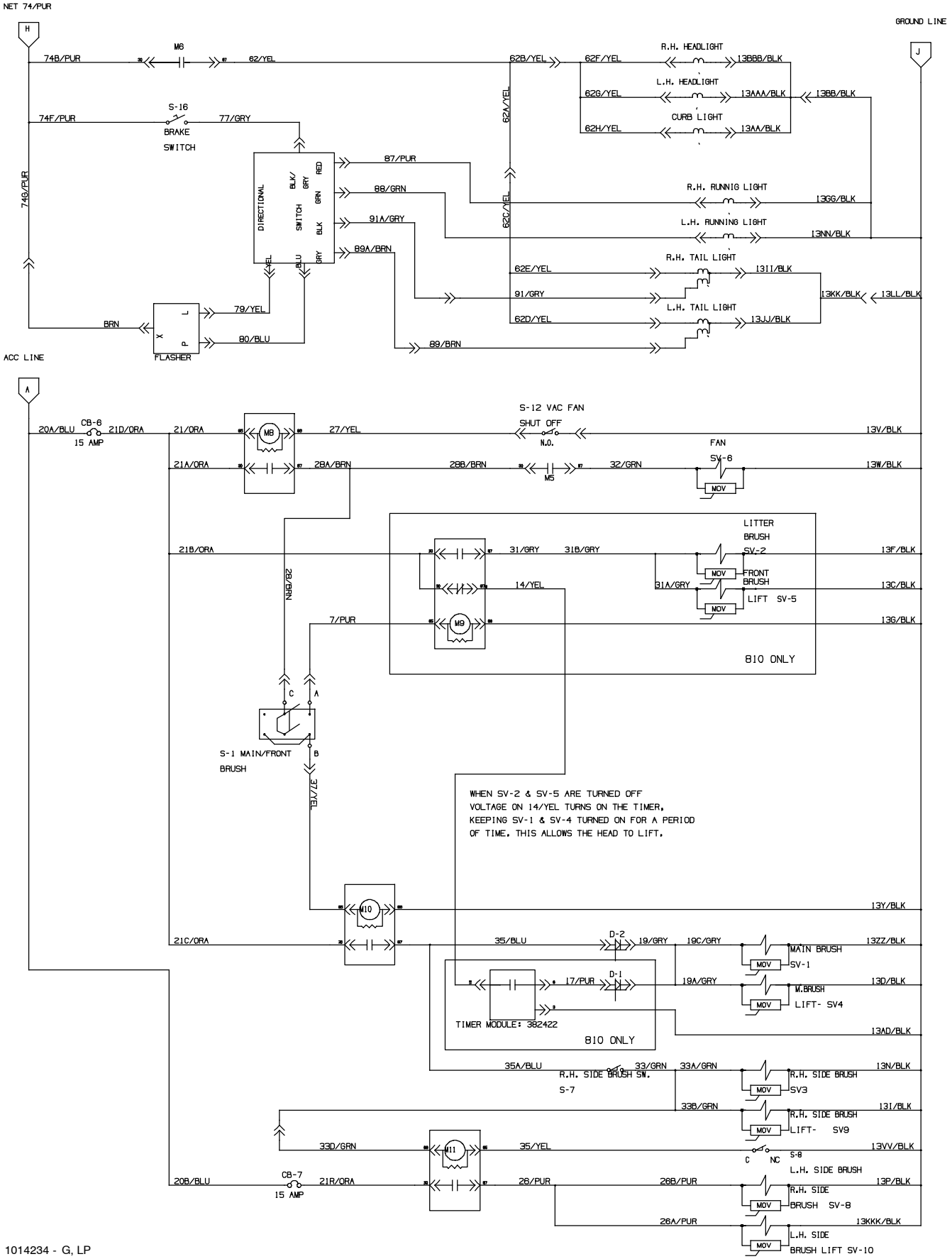

1014234 - G, LP

Fig. 94 - Electrical Schematic (006000-)

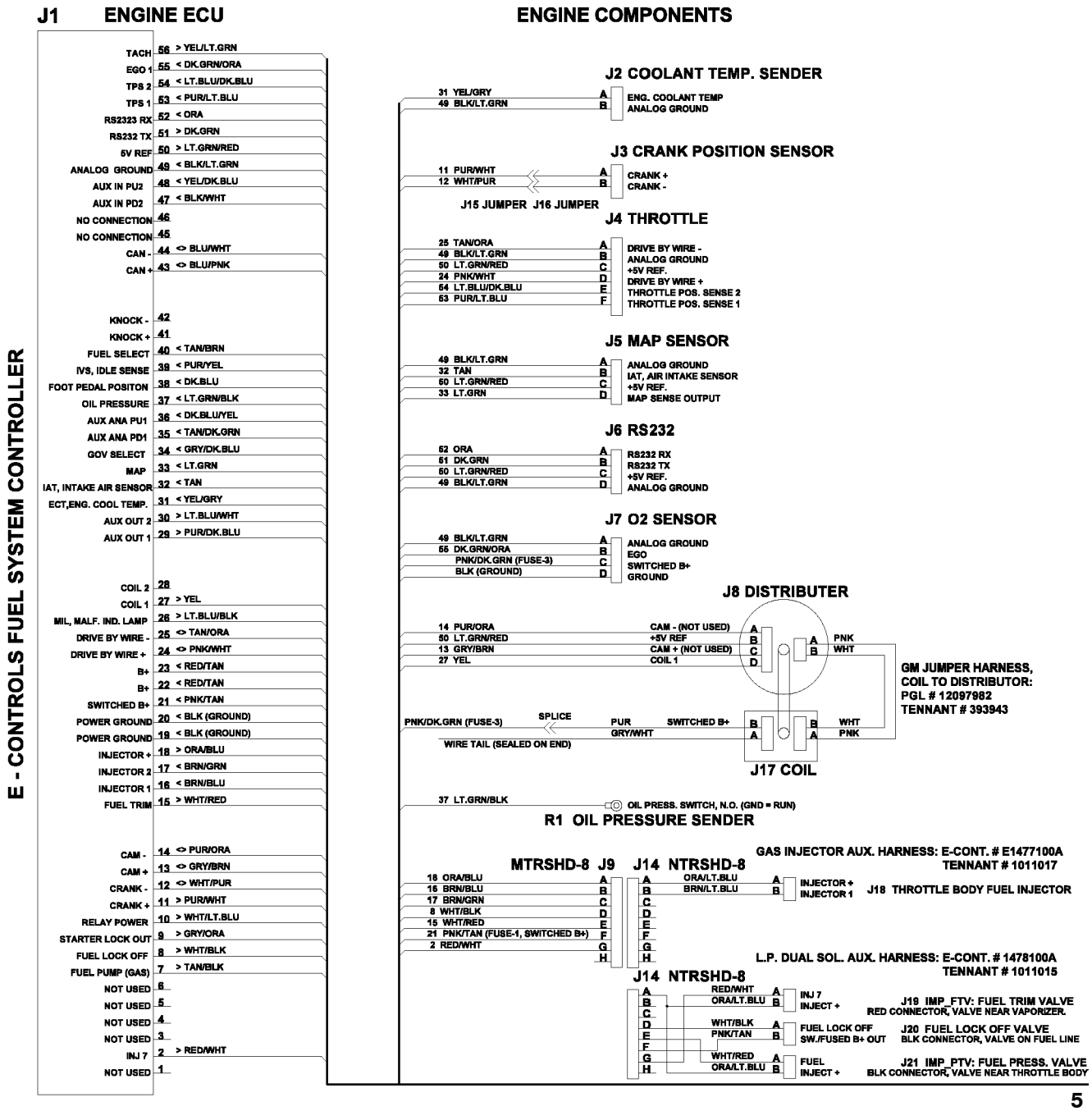

5

1014234 - G, LP

Fig. 94 - Electrical Schematic (006000-)

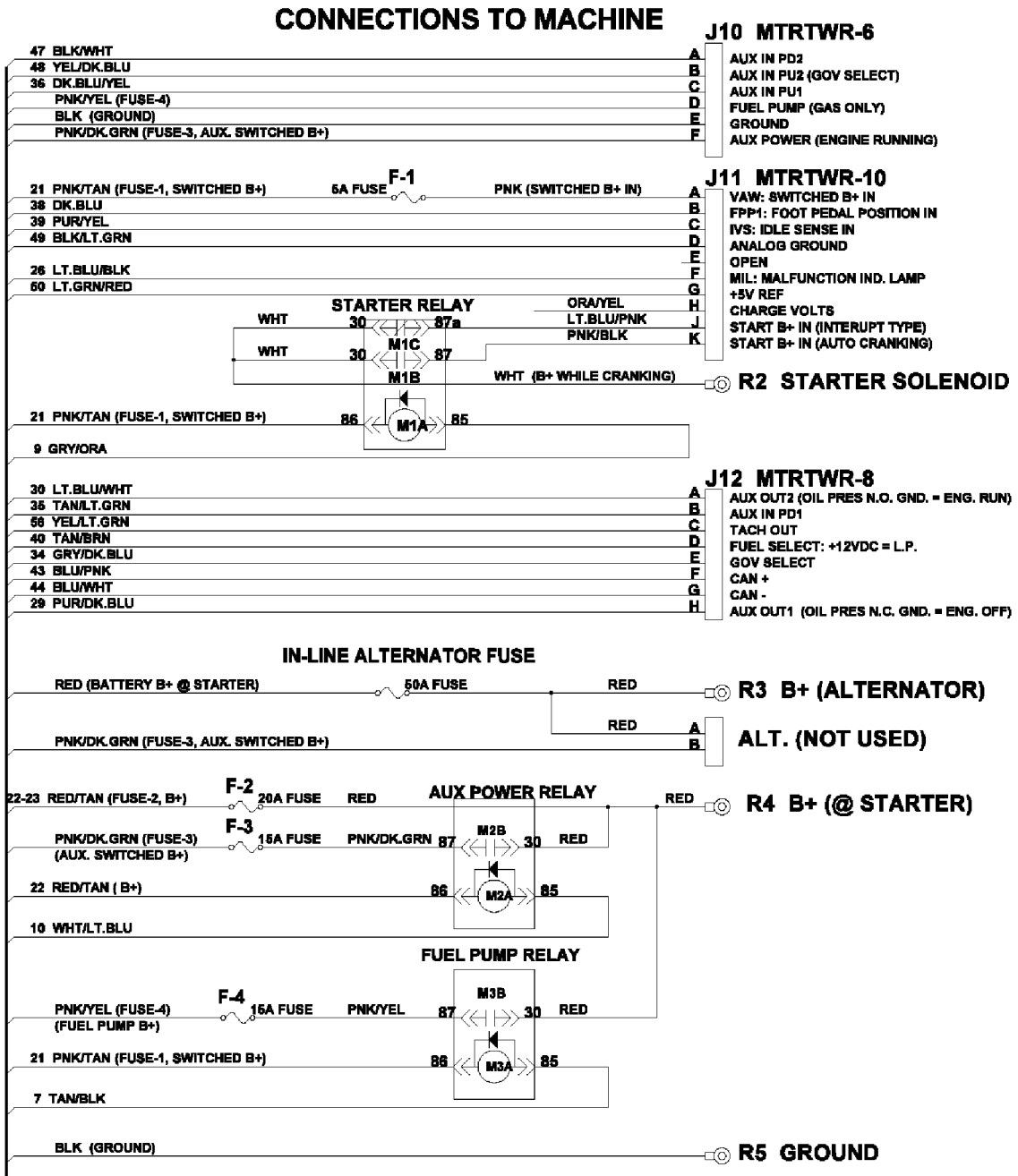

NOTES:

1) VENDOR: E-CONTROLS #E1350010E
2) ALL WIRE TO BE: SAE J1128 TXL
3) 3.0L GAS ENGINES INC. AUX. INJECTOR HARNESS:
   E-CONTROLS #E1477100A / TENNANT #1011017.
4) L.P. ENGINES INCLUDE AUX. INJECTOR HARNESS:
   E-CONTROLS #E1478100 / TENNANT #1011015

5

1014234 - G, LP

Fig. 94 - Electrical Schematic (006000-)

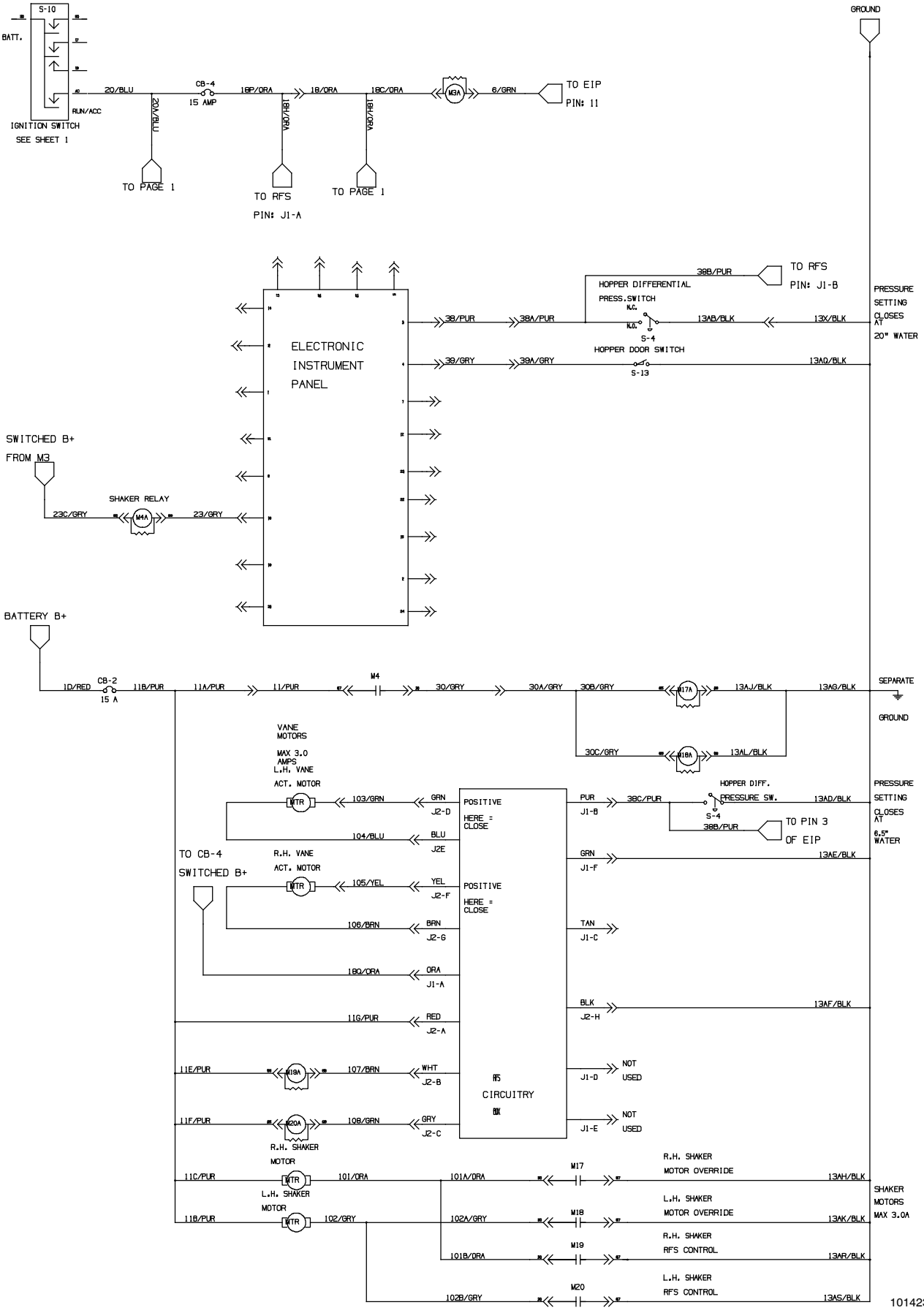

Fig. 95 - Wire Harnesses Group, Gas/LPG, Main (004000- 004274)

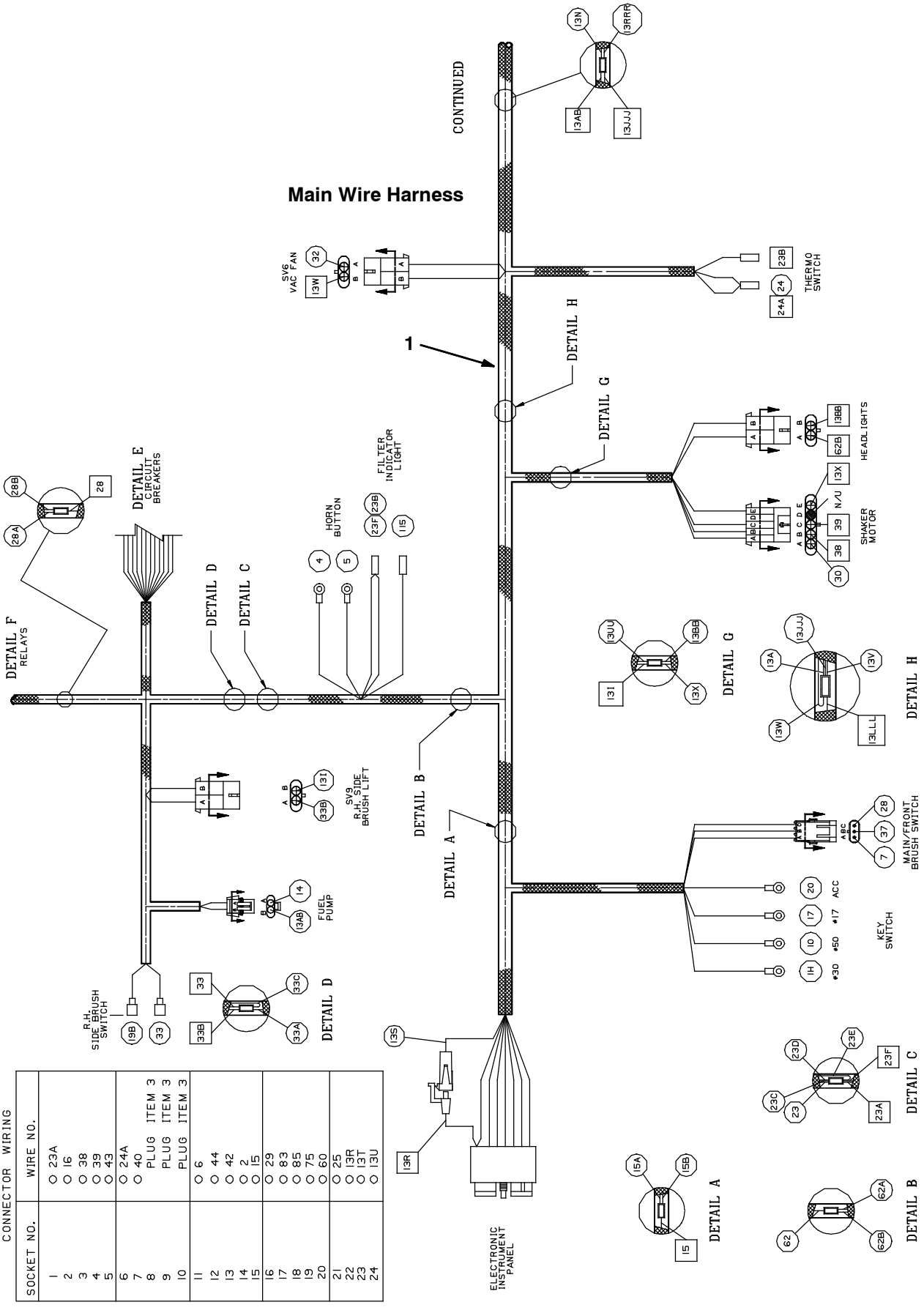

CONNECTOR WIRING

SOCKET NO.	WIRE NO.
1	○ 23A
2	○ 16
3	○ 38
4	○ 39
5	○ 43
6	○ 24A
7	○ 40
8	PLUG ITEM 3
9	PLUG ITEM 3
10	PLUG ITEM 3
11	○ 6
12	○ 44
13	○ 42
14	○ 2
15	○ 15
16	○ 29
17	○ 83
18	○ 85
19	○ 75
20	○ 60
21	○ 25
22	○ 13R
23	○ 13T
24	○ 13U

Fig. 95 - Wire Harnesses Group, Gas/LPG, Main (004000- 004274)

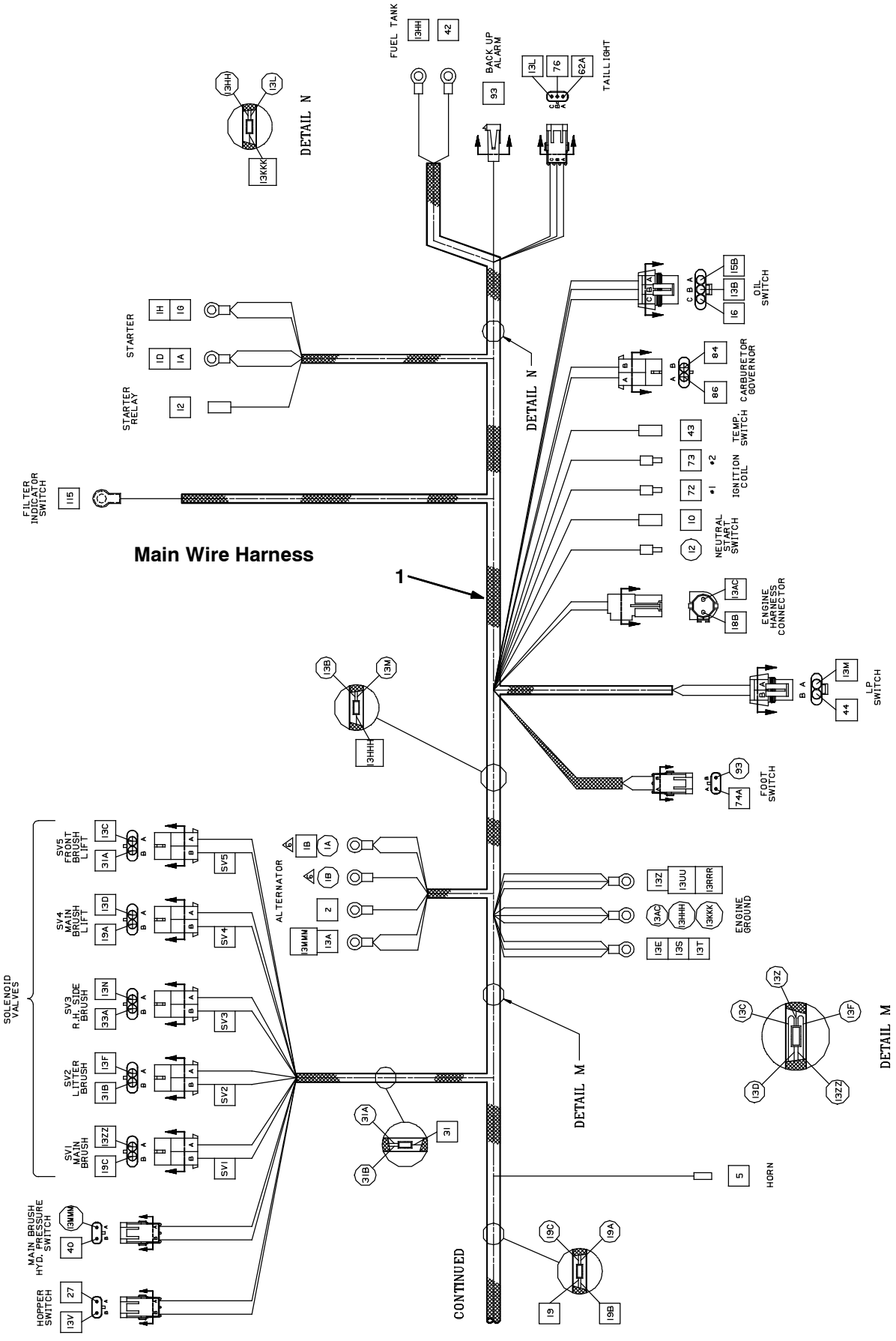

Fig. 95 - Wire Harnesses Group, Gas/LPG, Main (004000- 004274)

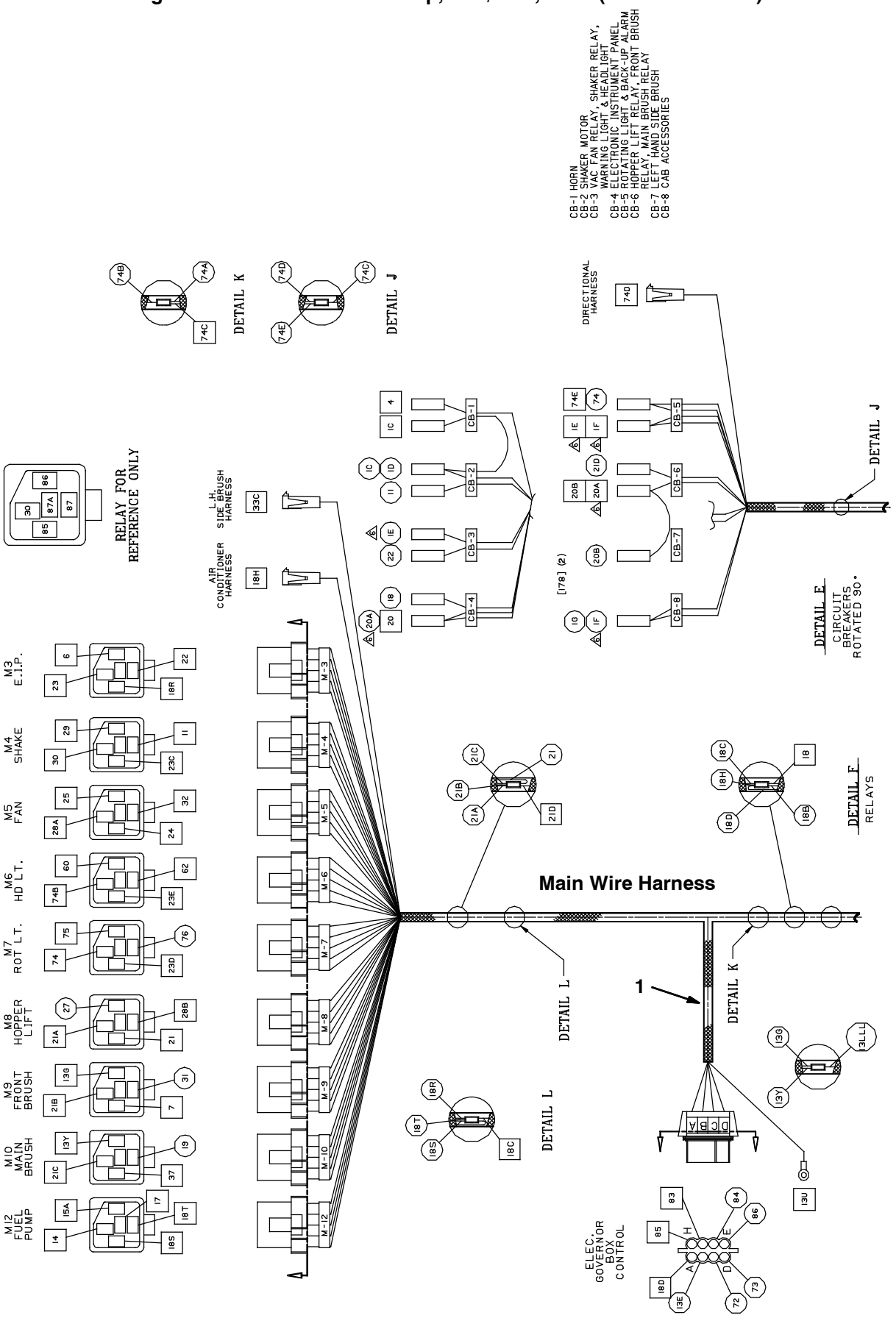

351147 - G, LP

Fig. 95 - Wire Harnesses Group, Gas/LPG, Main (004000- 004274)

Ref.	Part No.	Serial Number	Description	Qty.
1	83693	(004000- 004274)	Harness, Main, Gas/LPG, Lrg	1

Fig. 96 - Wire Harnesses Group, Gas/LPG, Hopper (004000-)

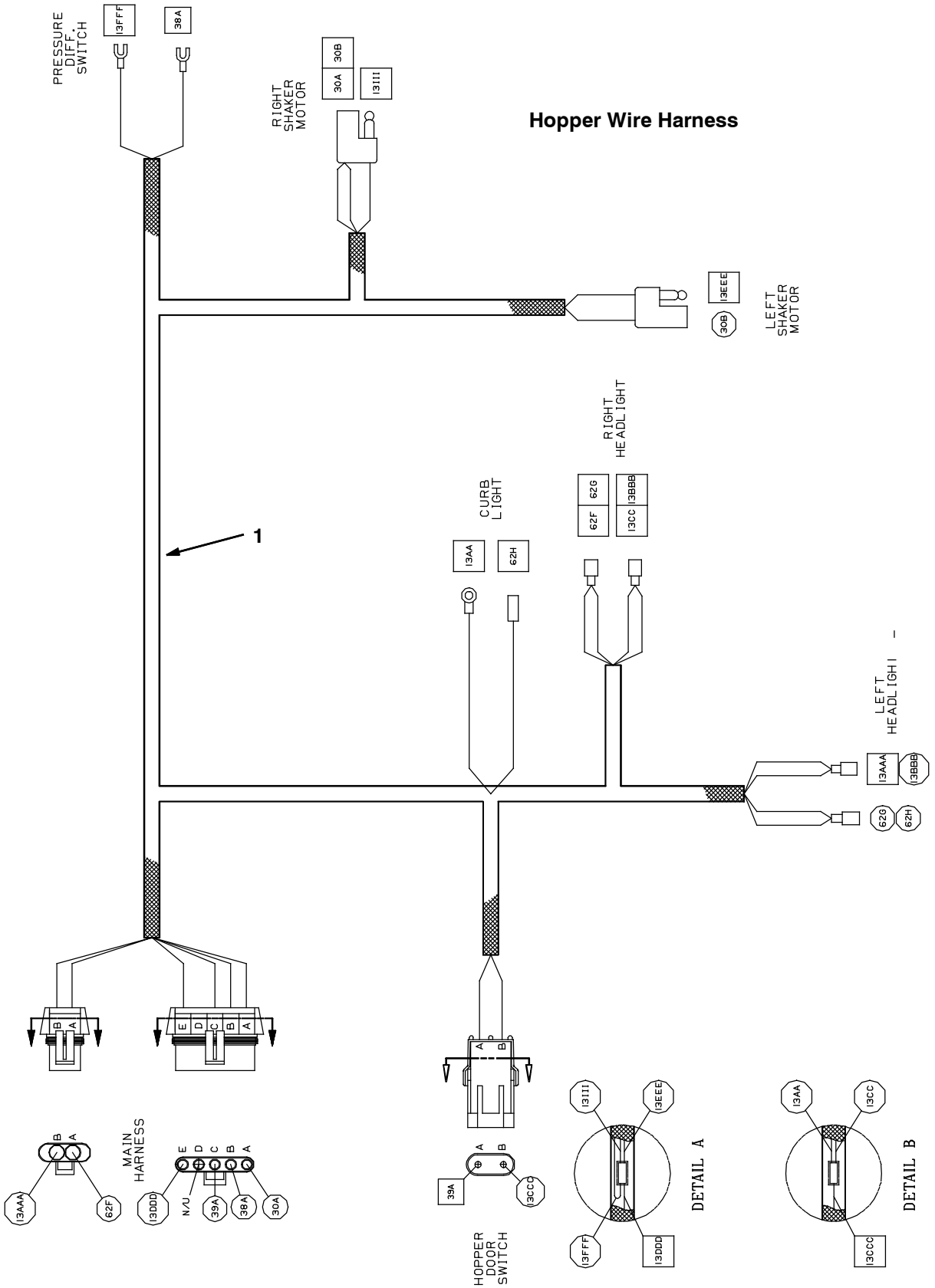

351144 - G, LP

Ref.	Part No.	Serial Number	Description	Qty.
1	83695	(004000-)	Harness, Hopper 800/810	1

Fig. 97 - Wire Harnesses Group, Gas/LPG, Tail Lights (004000-)

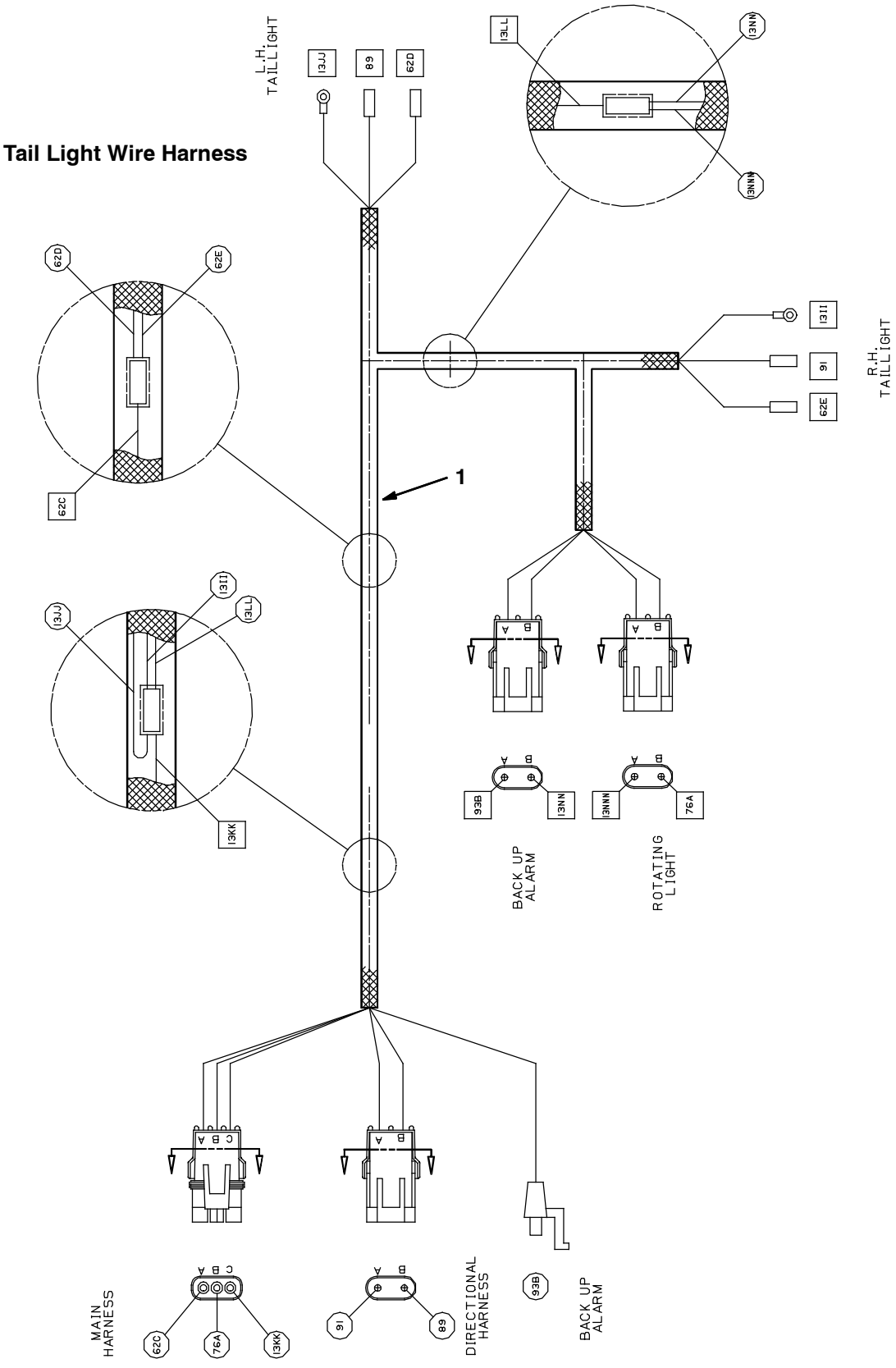

351145 - G, LP

Ref.	Part No.	Serial Number	Description	Qty.
1	70400	(004000-)	Harness, Turn/Rotate/Tail Lights	1

Fig. 98 - Wire Harnesses Group, Gas/LPG, Main (004275-004936)

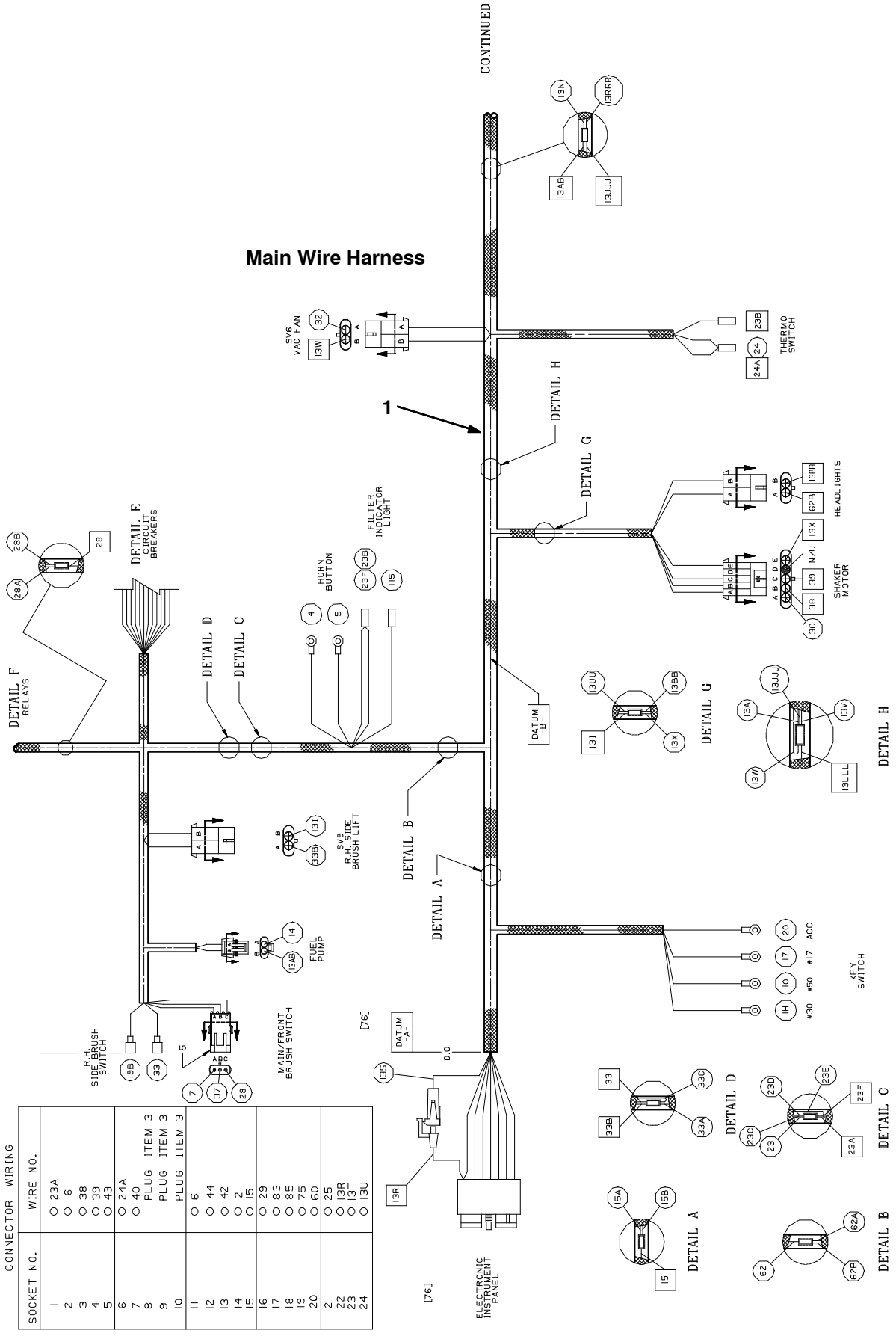

Fig. 98 - Wire Harnesses Group, Gas/LPG, Main (004275-004936)

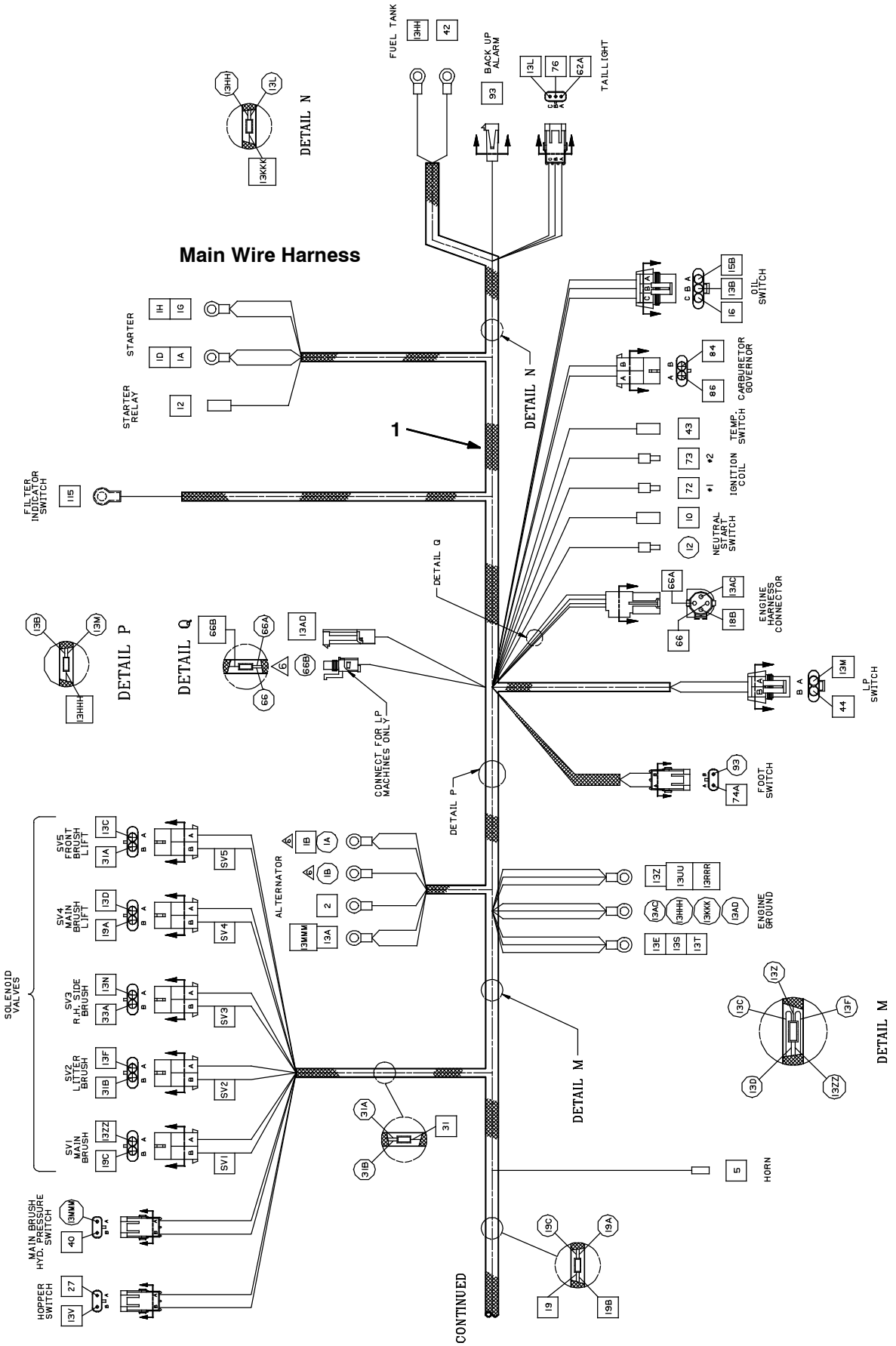

Fig. 98 - Wire Harnesses Group, Gas/LPG, Main (004275-004936)

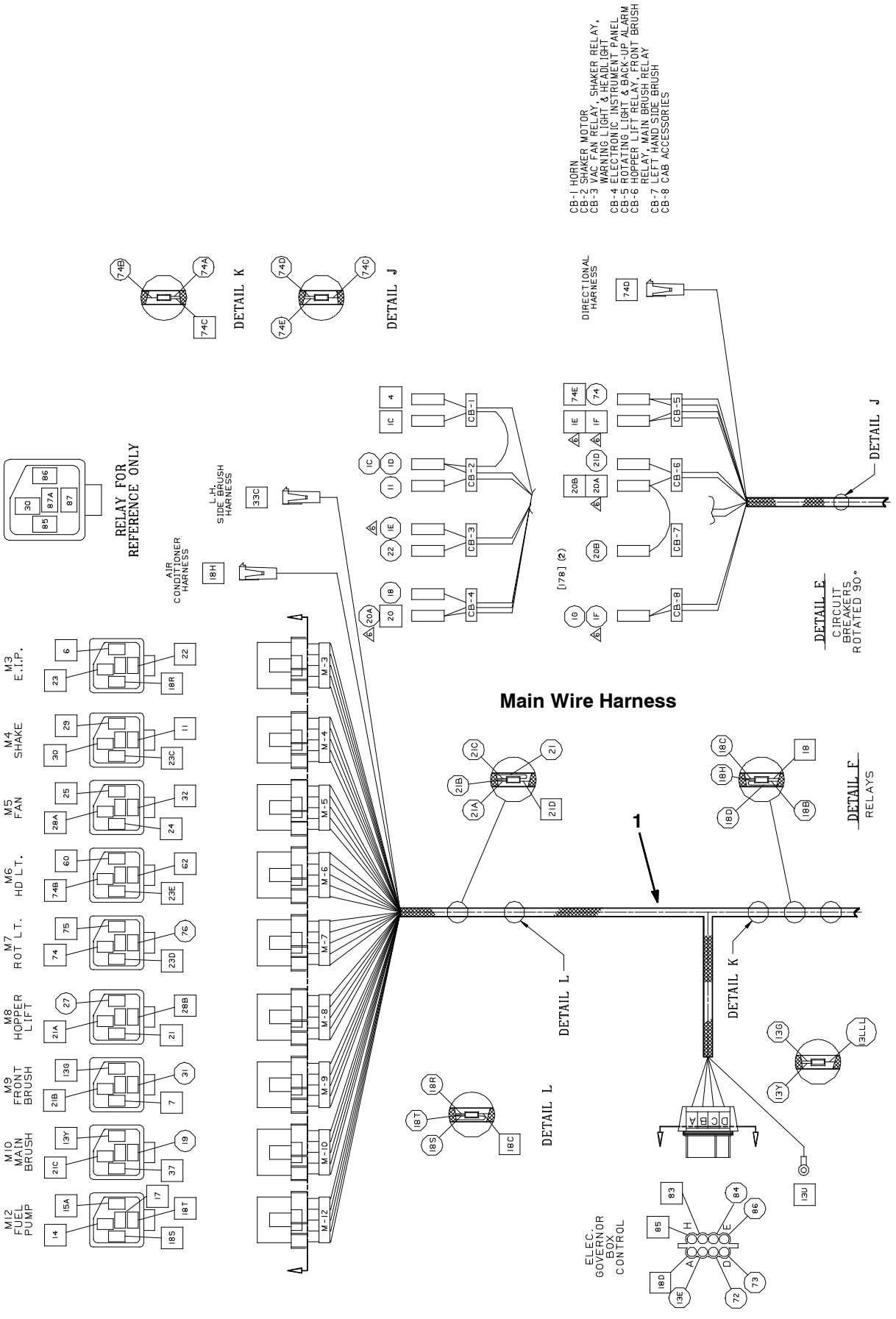

351147 - G, LP

Fig. 98 - Wire Harnesses Group, Gas/LPG, Main (004275- 004936)

Ref.	Part No.	Serial Number	Description	Qty.
1	398315	(004275- 004936)	Harness, Main, Gas/LPG, Lrg	1

Fig. 99 - Wire Harnesses Group, Gas/LPG, Main (004937-)

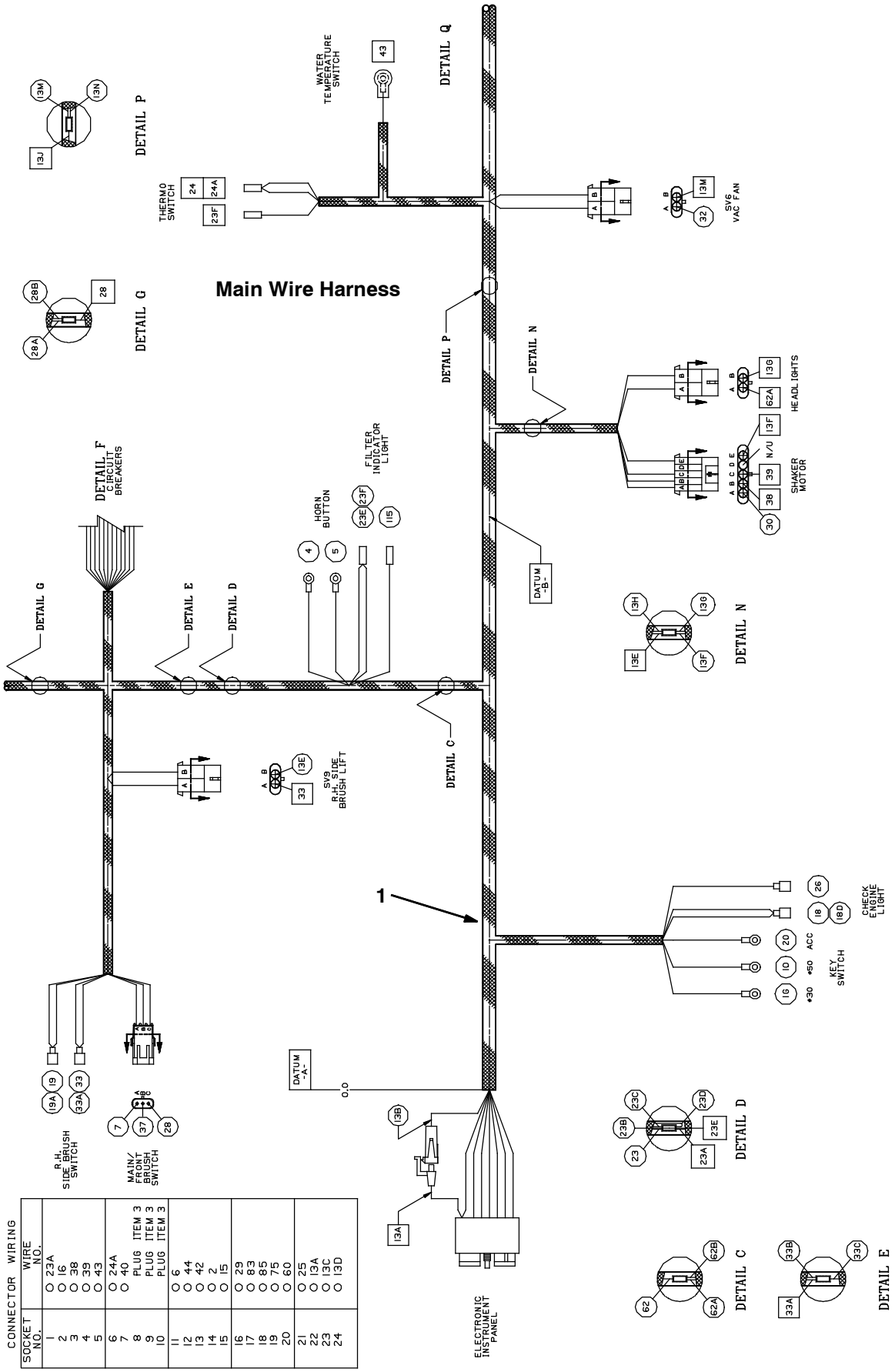

CONNECTOR	WIRE NO.
1	23A
2	16
3	38
4	39
5	43
6	24A
7	40
8	PLUG ITEM 3
9	PLUG ITEM 3
10	PLUG ITEM 3
11	6
12	44
13	42
14	2
15	15
16	29
17	83
18	85
19	75
20	60
21	25
22	13A
23	13C
24	13D

Fig. 99 - Wire Harnesses Group, Gas/LPG, Main (004937-)

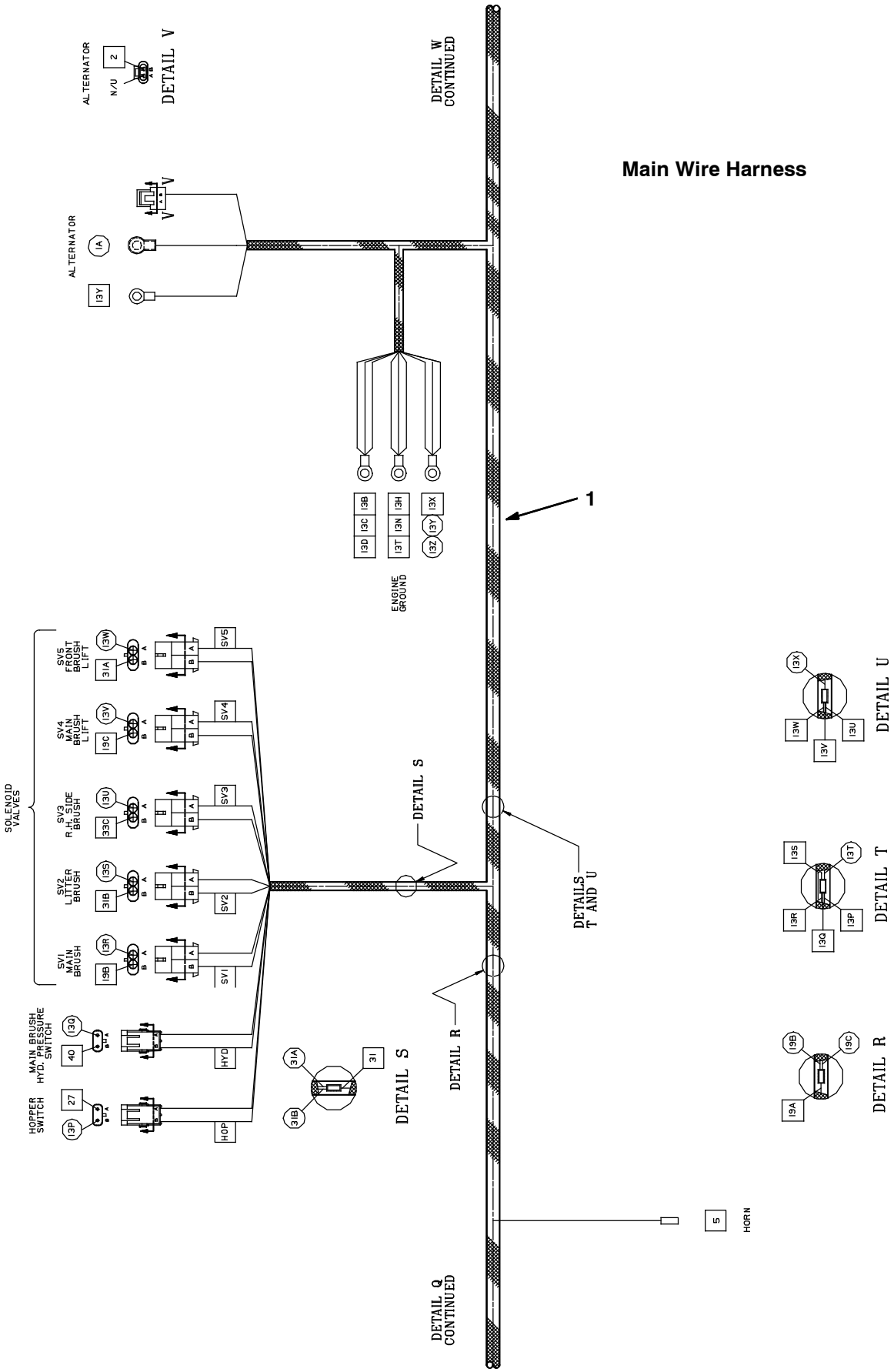

Fig. 99 - Wire Harnesses Group, Gas/LPG, Main (004937-)

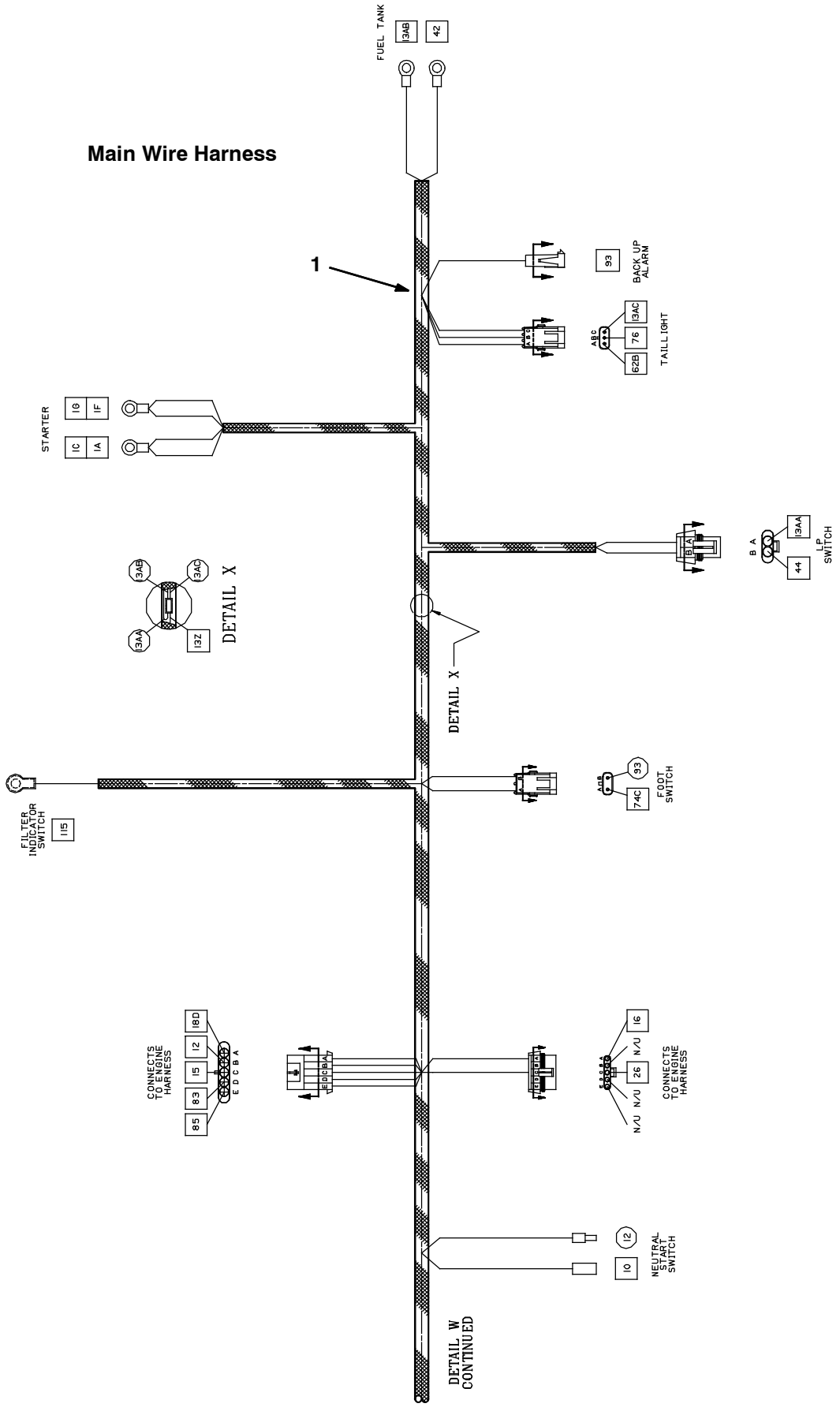

Fig. 99 - Wire Harnesses Group, Gas/LPG, Main (004937-)

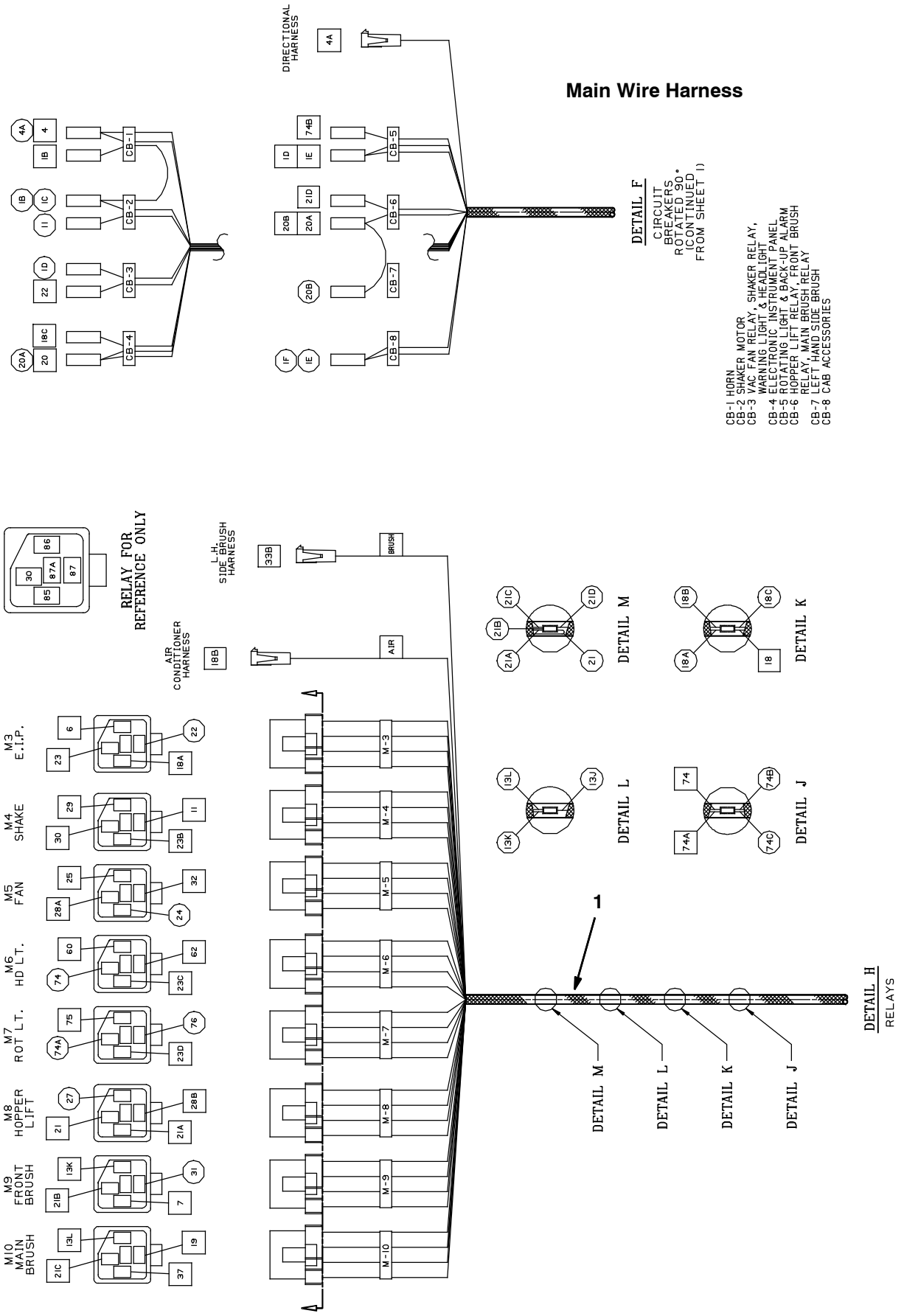

353876 - GM, G, LP

Fig. 99 - Wire Harnesses Group, Gas/LPG Main (004937-)

Ref.	Part No.	Serial Number	Description	Qty.
1	392564	(004937-)	Harness, Main, Gas/LPG, Lrg	1
	371921	(004937- 005999)	Harness, Gm 3.0 L Engine Harness	1

Fig. 100 - Wire Harnesses Group, Gas/LPG Engine (006000-006999)

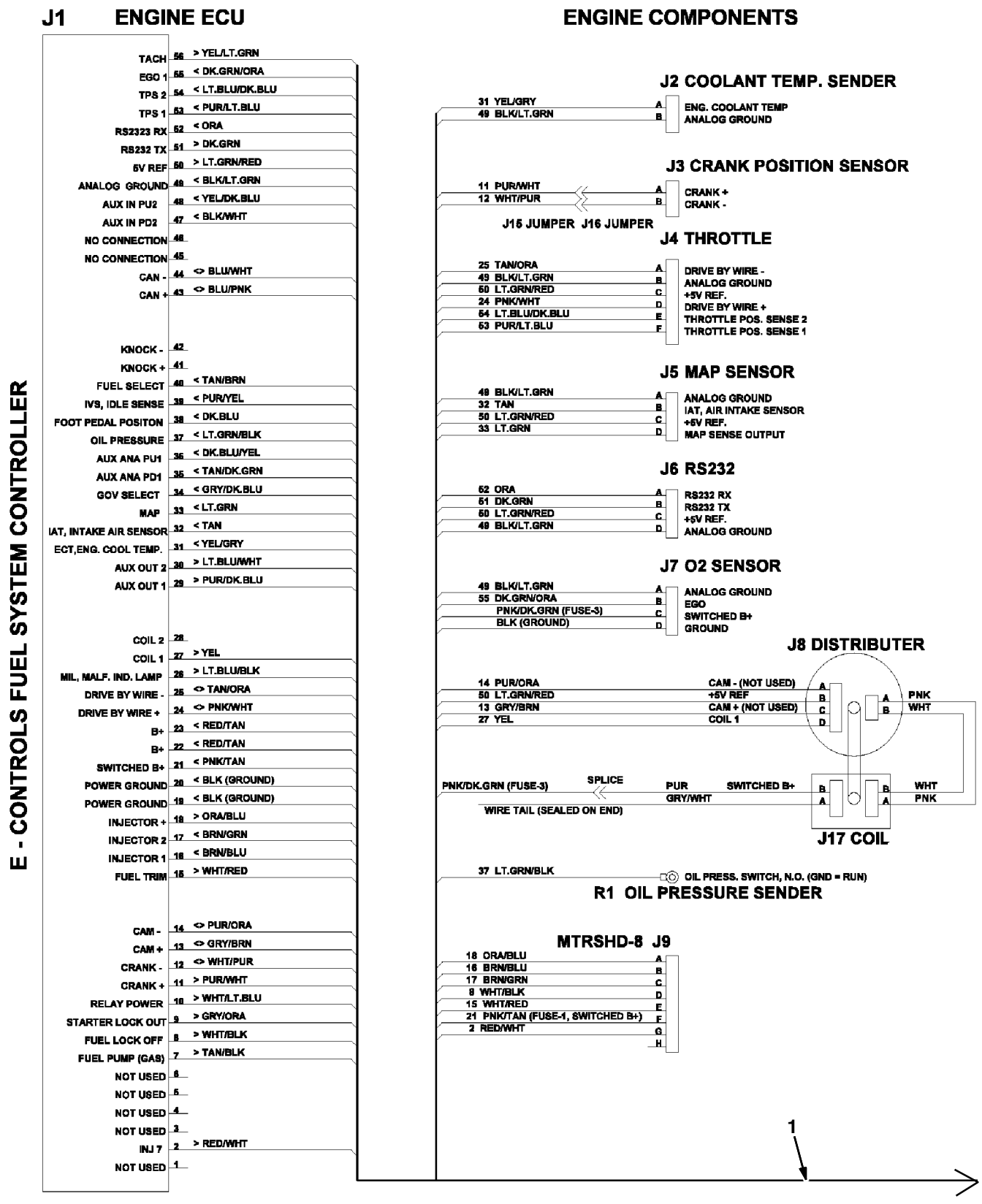

Fig. 100 - Wire Harnesses Group, Gas/LPG Engine (006000-006999)

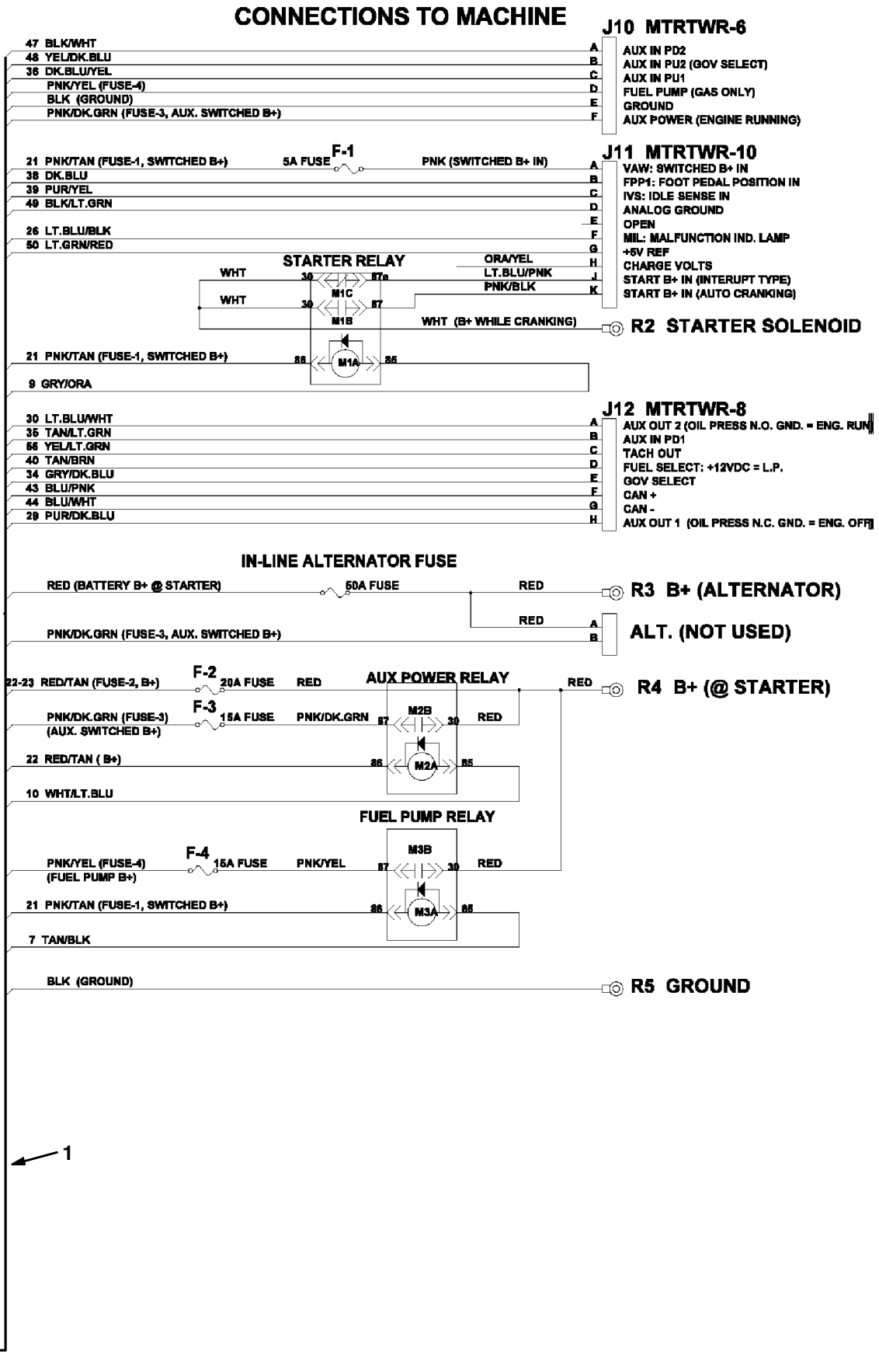

Fig. 100 - Wire Harnesses Group, Gas/LPG Engine (006000-006999)

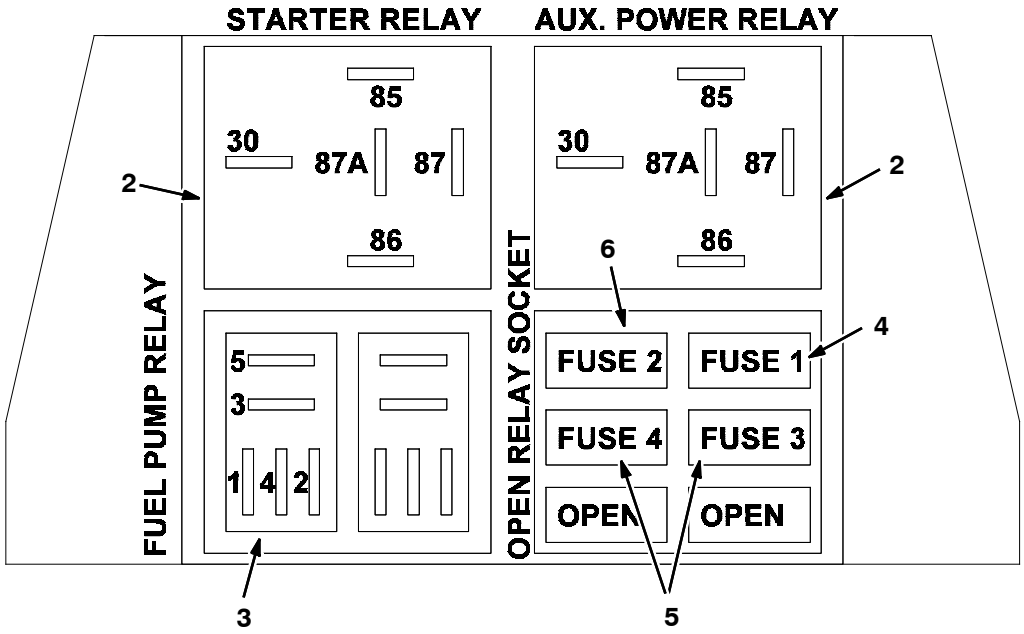

GM, G, LP

	Ref.	Part No.	Serial Number	Description	Qty.
▽	1	1011011	(006000-006999)	Harness, Eng [3.0l, Gm, E-cntrl]	1
▲	2	57804	(006000-006999)	Relay, 12vdc, 40a, Spdt	2
▲	3	394916	(006000-006999)	Relay, 12vdc, 20a, Spdt	1
▲	4	372235	(006000-006999)	Fuse, 5 Amp, [Min-5]	1
▲	5	372236	(006000-006999)	Fuse, 15 Amp, [Min-15]	2
▲	6	372237	(006000-006999)	Fuse, 20 Amp, [Min-20]	1

Fig. 101 - Wire Harnesses Group, Gas/LPG Injectors (006000- 006999)

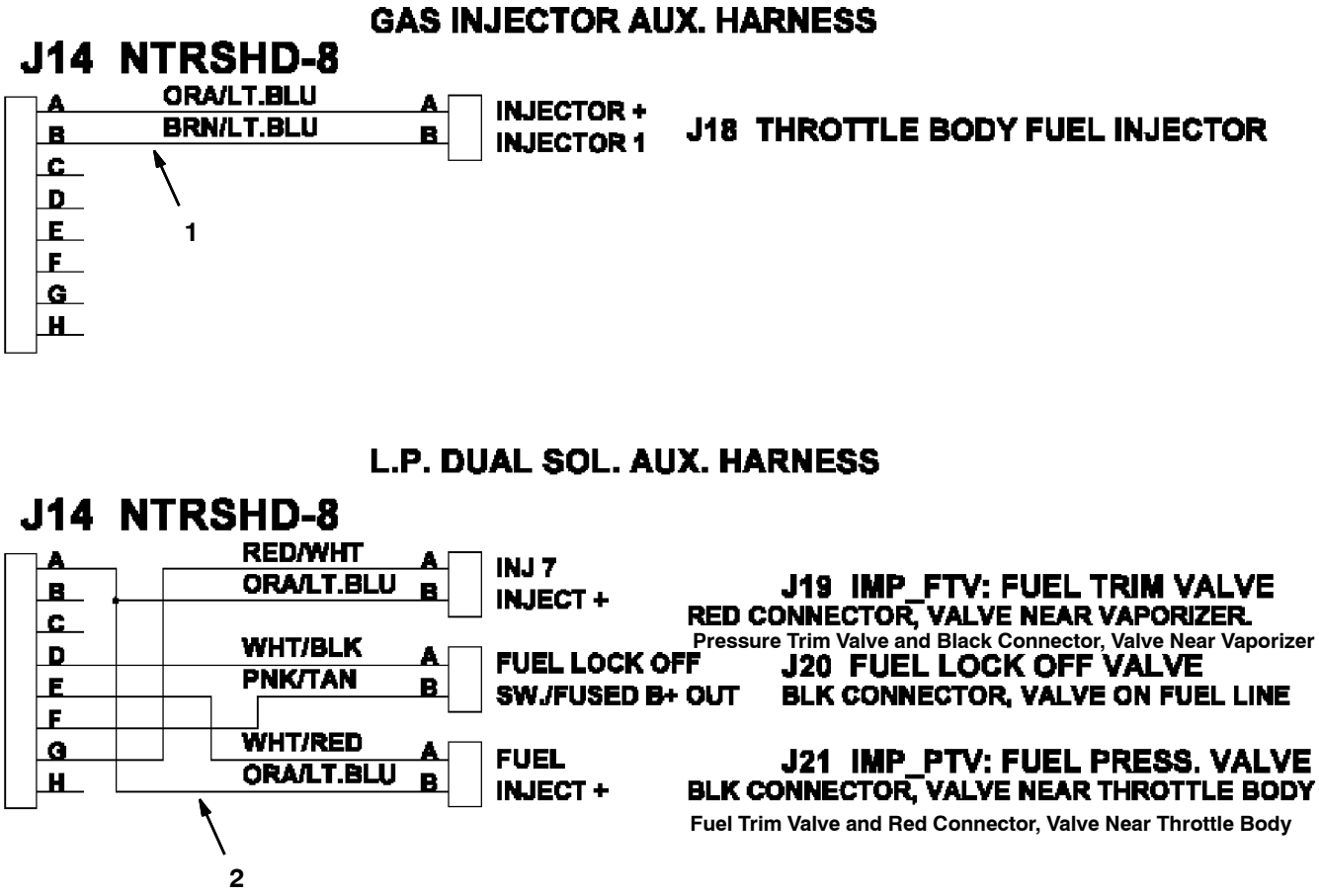

GM, G, LP

Ref.	Part No.	Serial Number	Description	Qty.
1	1011017	(006000- 006999)	Harness, Injector, Gas[3.0l Gm,E- Cntrl]	1
2	1011015	(006000- 006999)	Harness, Lpg Injector [3.0l, Gm,E- Cont]	1

Fig. 102 - Wire Harnesses Group, Gas/LPG Engine (007000-007593)

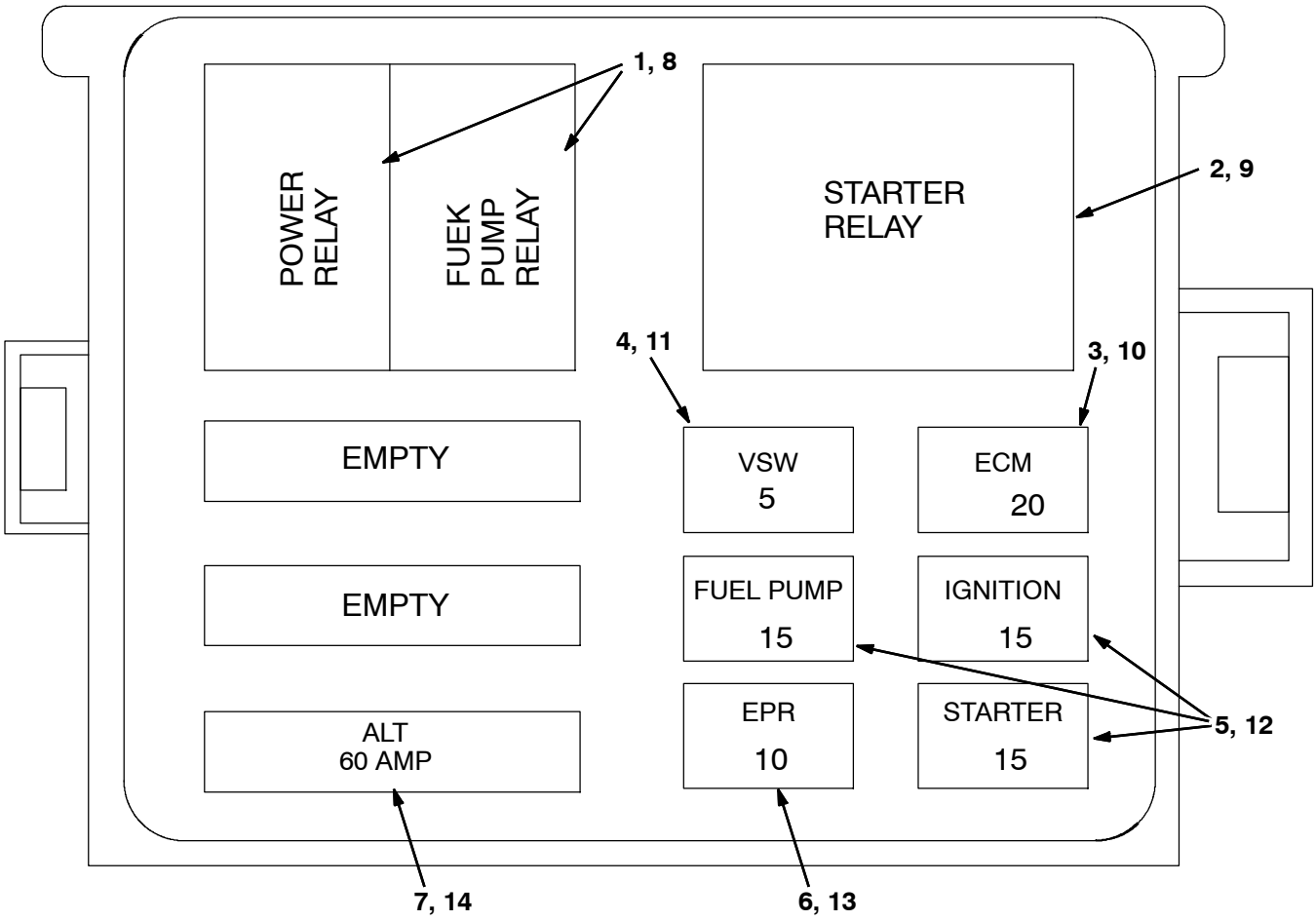

GM, G, LP

	Ref.	Part No.	Serial Number	Description	Qty.
▽		385010	(007000-007593)	Harness, Eng, Gas [3.0l 2007]	1
▲	1	394916	(007000-007593)	Relay, 12vdc, 20a, Spdt	2
▲	2	57804	(007000-007593)	Relay, 12vdc, 40a, Spdt	1
▲	3	372237	(007000-007593)	Fuse, 20 Amp, [Min-20]	1
▲	4	372235	(007000-007593)	Fuse, 5 Amp, [Min-5]	1
▲	5	372236	(007000-007593)	Fuse, 15 Amp, [Min-15]	2
▲	6	384999	(007000-007593)	Fuse, 10 Amp	1
▲	7	384998	(007000-007593)	Fuse, 60 Amp	1
▽		385018	(007000-007593)	Harness, Eng, Lpg [3.0l 2007]	1
▲	8	394916	(007000-007593)	Relay, 12vdc, 20a, Spdt	2
▲	9	57804	(007000-007593)	Relay, 12vdc, 40a, Spdt	1
▲	10	372237	(007000-007593)	Fuse, 20 Amp, [Min-20]	1
▲	11	372235	(007000-007593)	Fuse, 5 Amp, [Min-5]	1
▲	12	372236	(007000-007593)	Fuse, 15 Amp, [Min-15]	2
▲	13	384999	(007000-007593)	Fuse, 10 Amp	1
▲	14	384998	(007000-007593)	Fuse, 60 Amp	1

Fig. 103 - Wire Harnesses Group, Gas/LPG Engine (007594-)

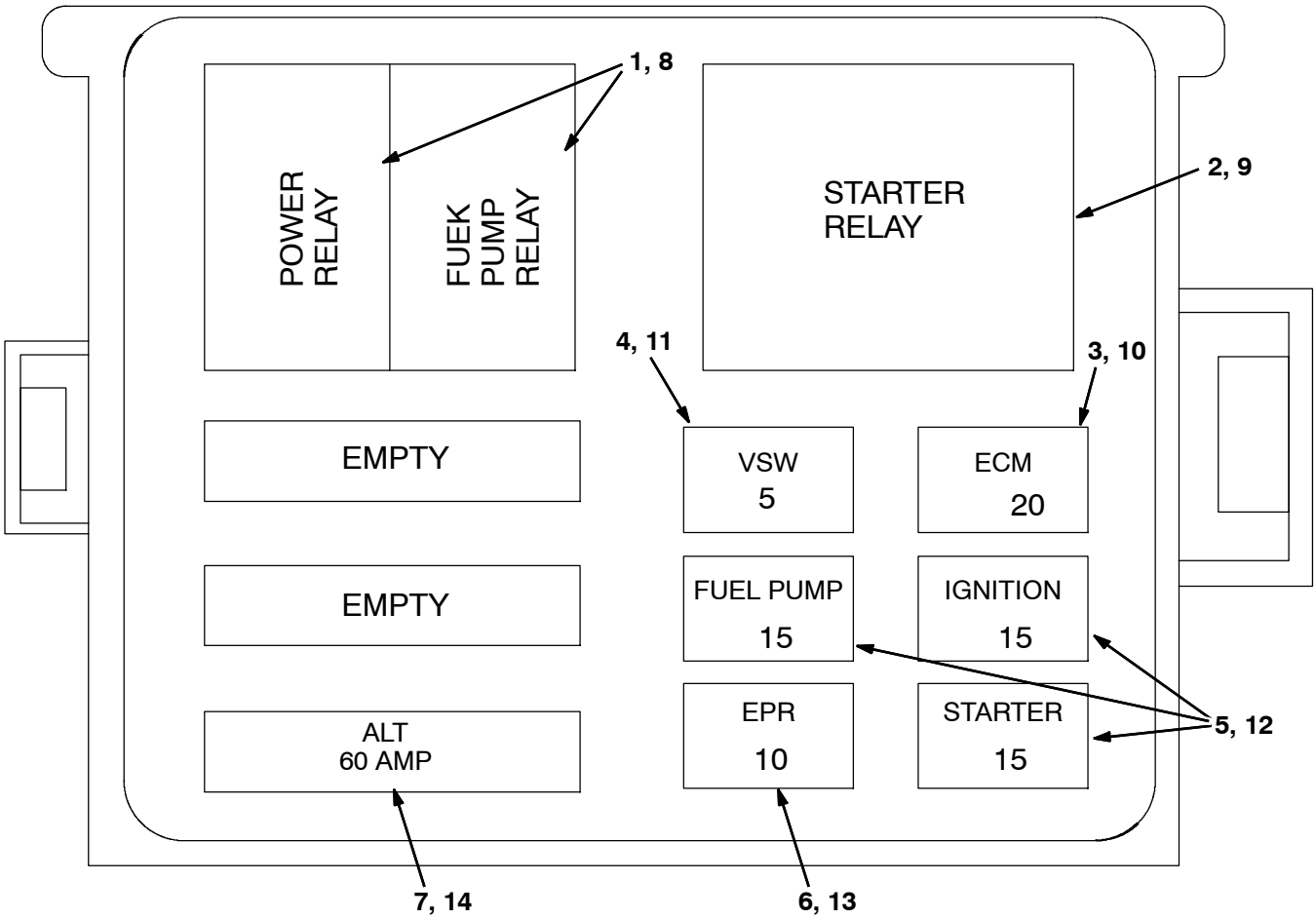

GM, G, LP

	Ref.	Part No.	Serial Number	Description	Qty.
▽		1063654	(007594-)	Harness, Wire, Eng, Gas [Gm 3.0l 10]	1
▲	1	394916	(007594-)	Relay, 12vdc, 20a, Spdt	2
▲	2	57804	(007594-)	Relay, 12vdc, 40a, Spdt	1
▲	3	372237	(007594-)	Fuse, 20 Amp, [Min- 20]	1
▲	4	372235	(007594-)	Fuse, 5 Amp, [Min- 5]	1
▲	5	372236	(007594-)	Fuse, 15 Amp, [Min- 15]	2
▲	6	384999	(007594-)	Fuse, 10 Amp	1
▲	7	384998	(007594-)	Fuse, 60 Amp	1
▽		1063653	(007594-)	Harness, Wire, Eng, Lpg [Gm 3.0l 10]	1
▲	8	394916	(007594-)	Relay, 12vdc, 20a, Spdt	2
▲	9	57804	(007594-)	Relay, 12vdc, 40a, Spdt	1
▲	10	372237	(007594-)	Fuse, 20 Amp, [Min- 20]	1
▲	11	372235	(007594-)	Fuse, 5 Amp, [Min- 5]	1
▲	12	372236	(007594-)	Fuse, 15 Amp, [Min- 15]	2
▲	13	384999	(007594-)	Fuse, 10 Amp	1
▲	14	384998	(007594-)	Fuse, 60 Amp	1

Fig. 104 - Wire Harnesses Schematic, Gas Engine (007000-)

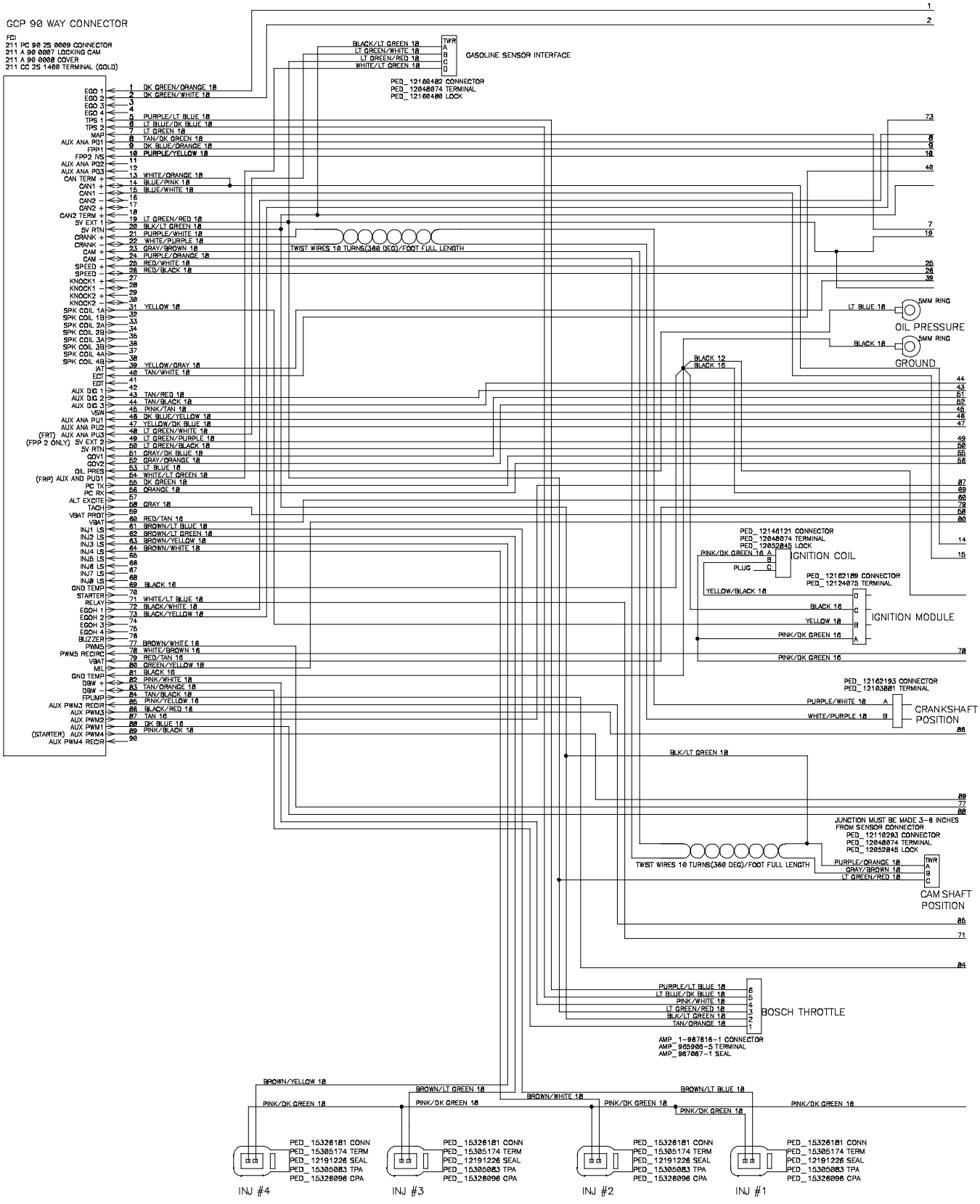

Fig. 104 - Wire Harnesses Schematic, Gas Engine (007000-)

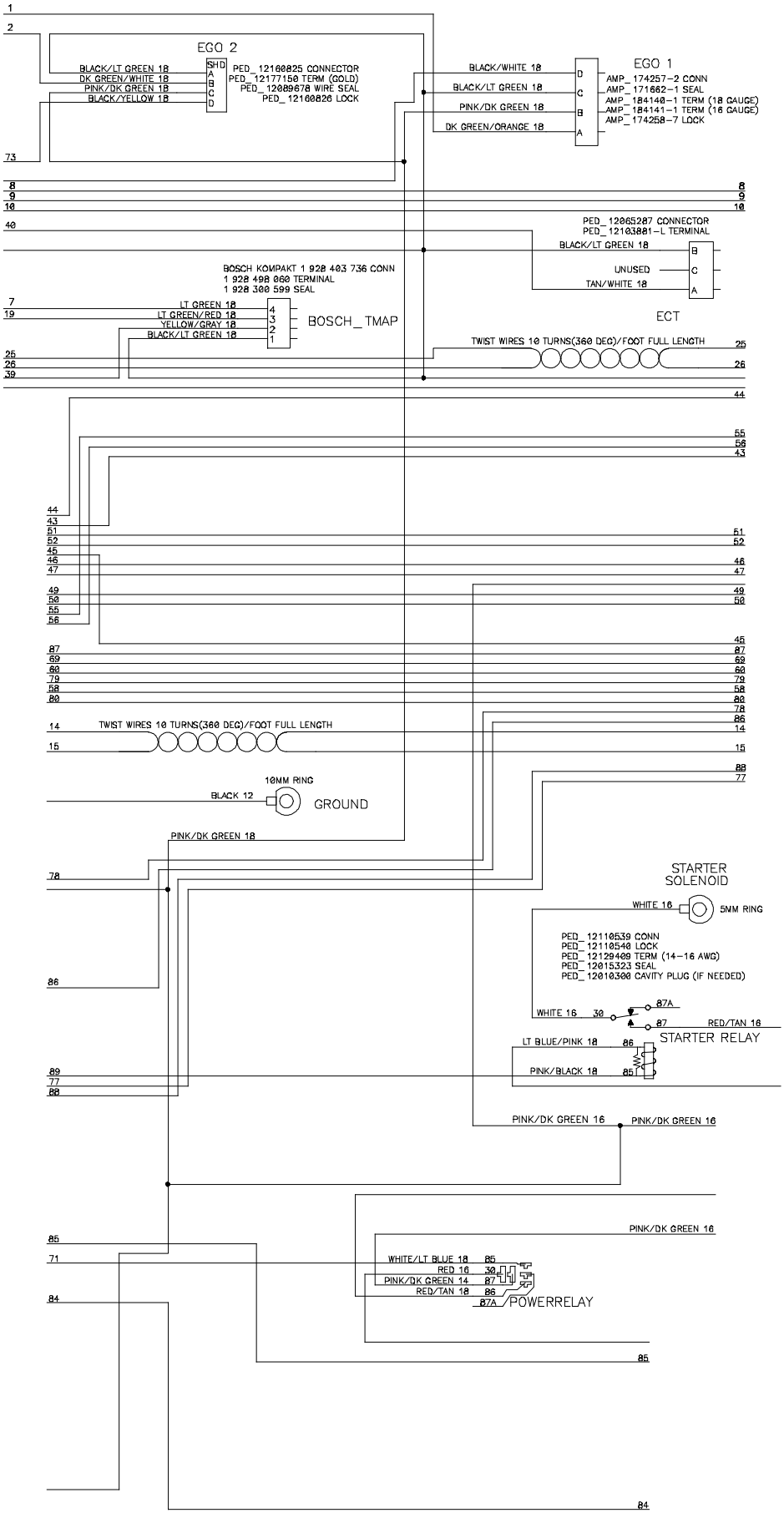

Fig. 104 - Wire Harnesses Schematic, Gas Engine (007000-)

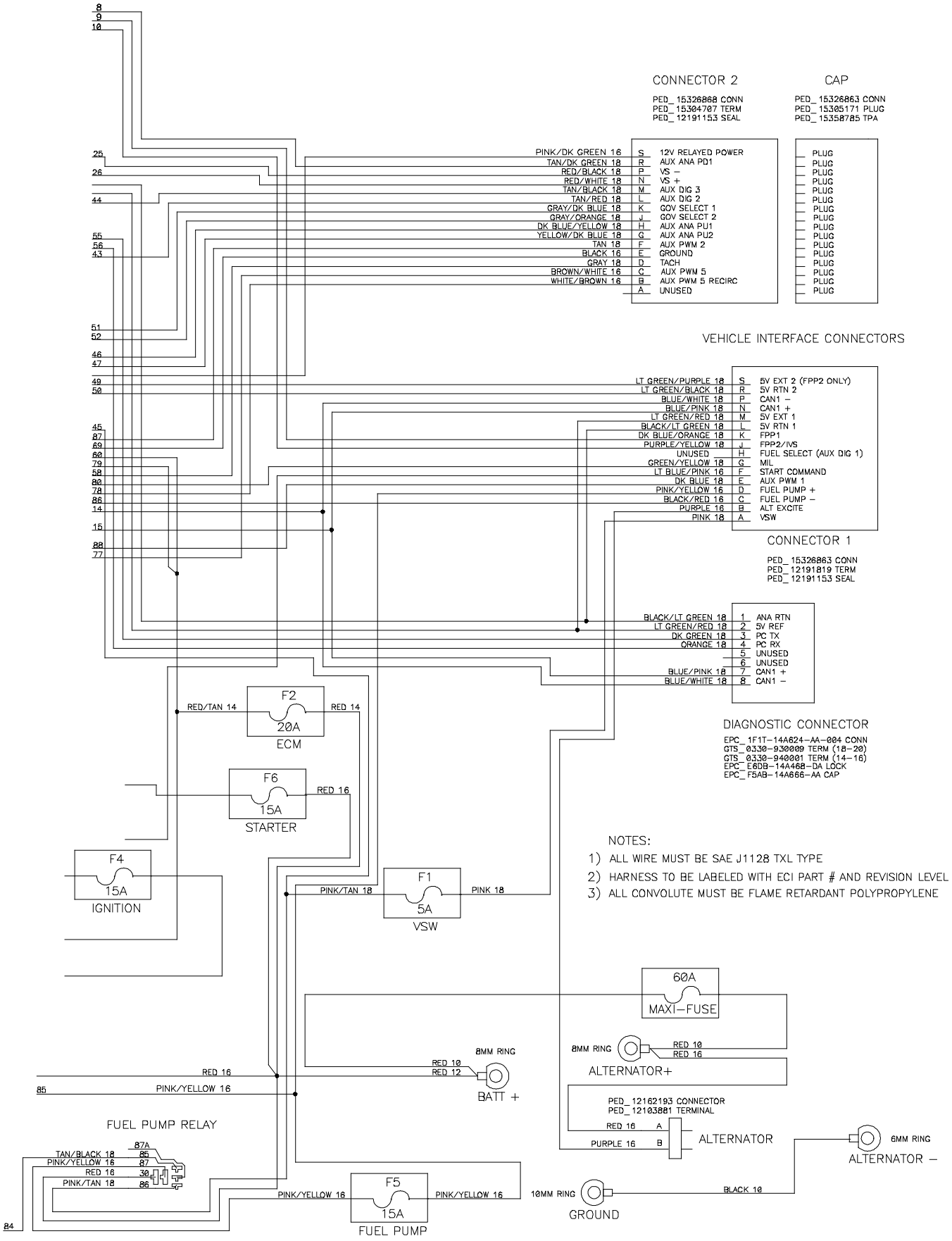

Fig. 105 - Wire Harnesses Schematic, LPG Engine (007000-)

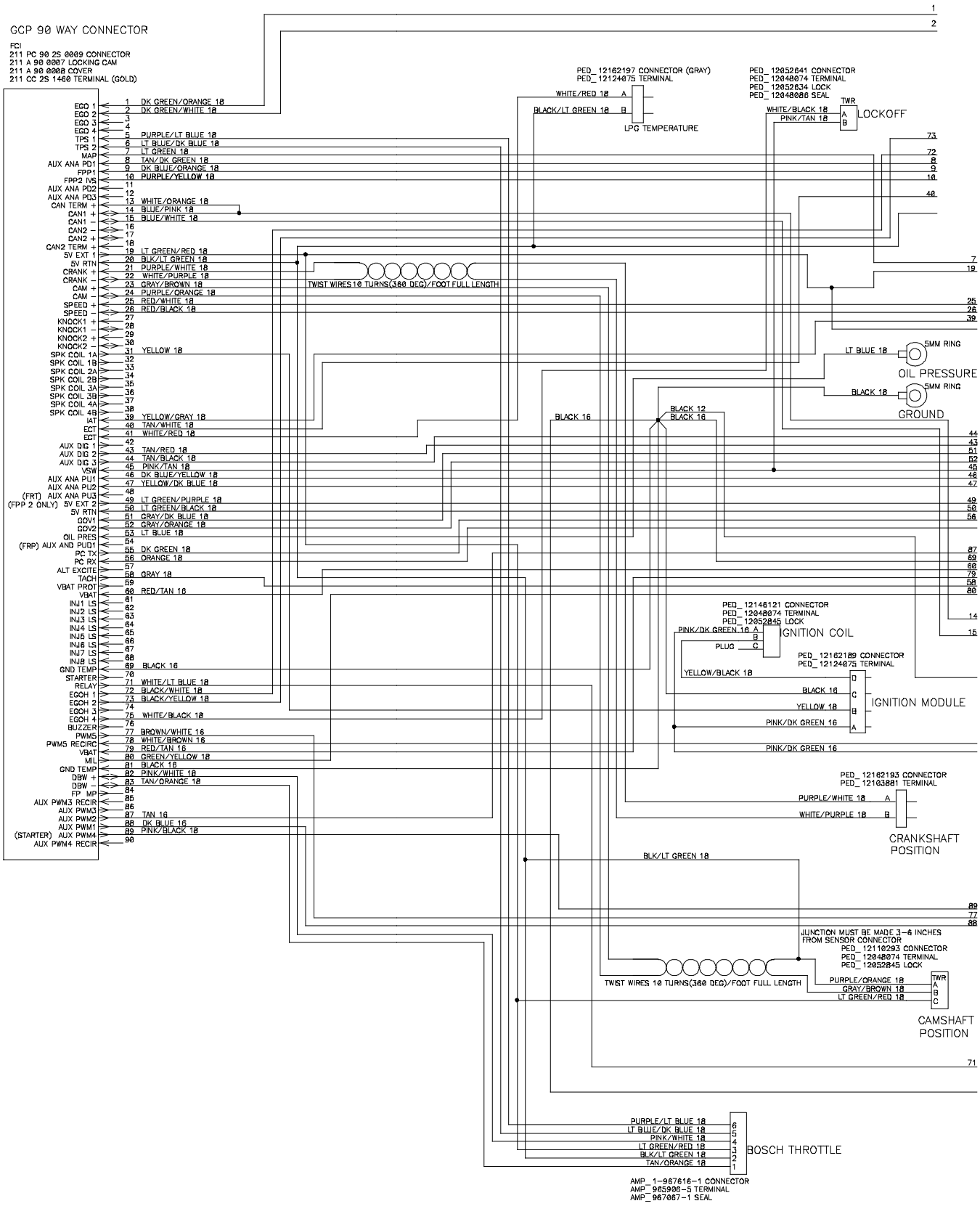

Fig. 105 - Wire Harnesses Schematic, LPG Engine (007000-)

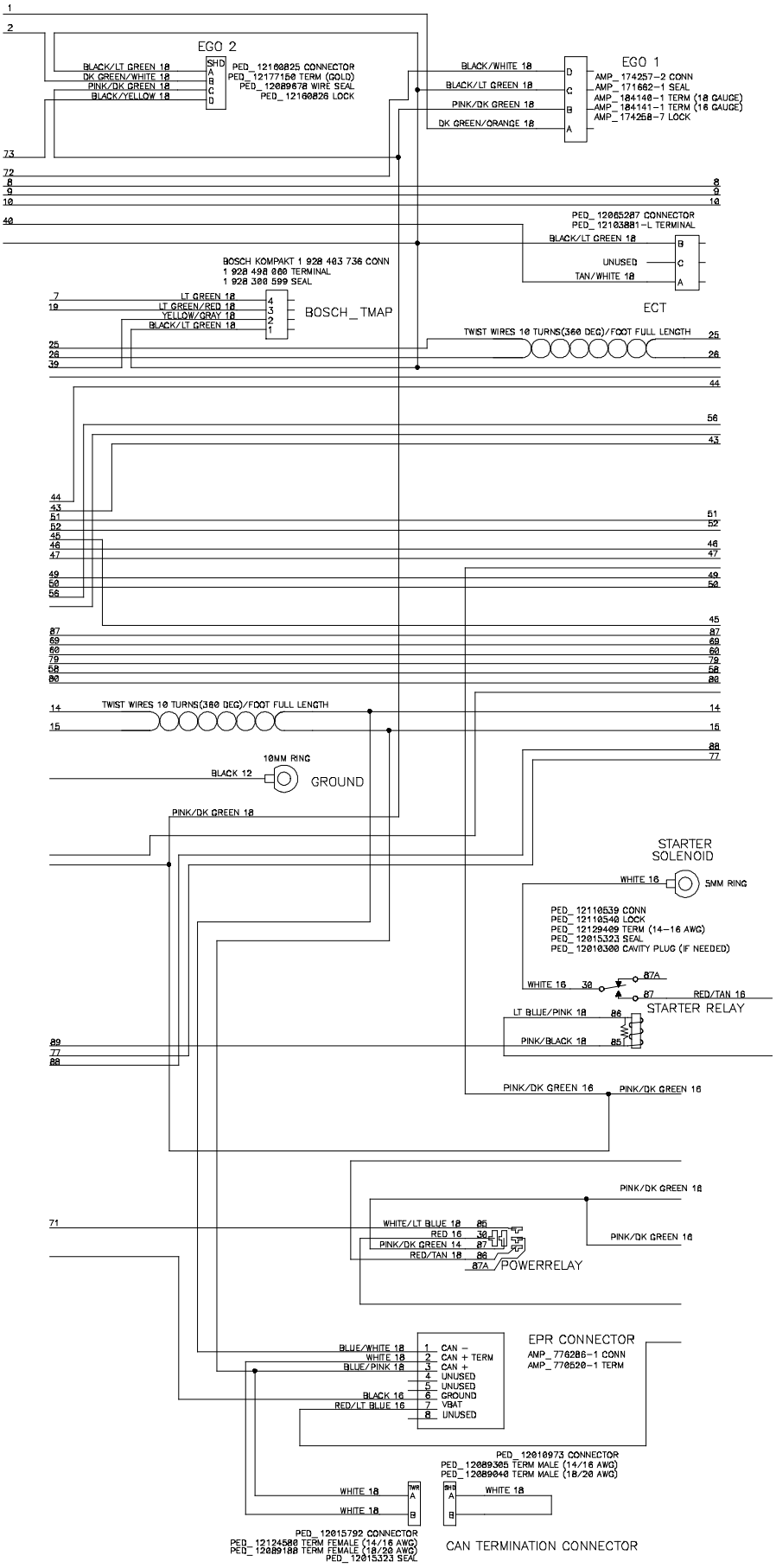

Fig. 105 - Wire Harnesses Schematic, LPG Engine (007000-)

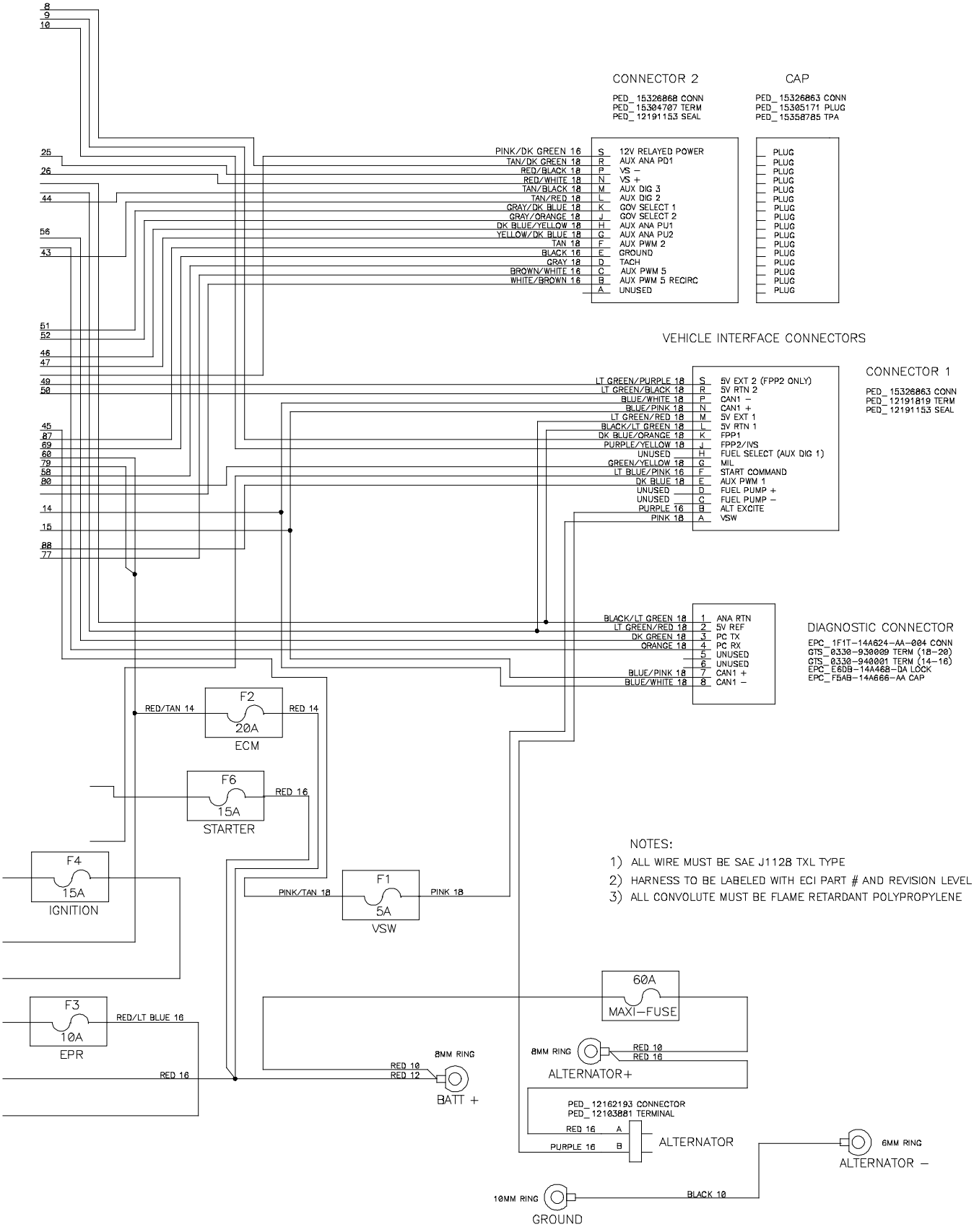

Fig. 106 - Wire Harnesses Group, Gas/LPG Adaptor (006000-006999)

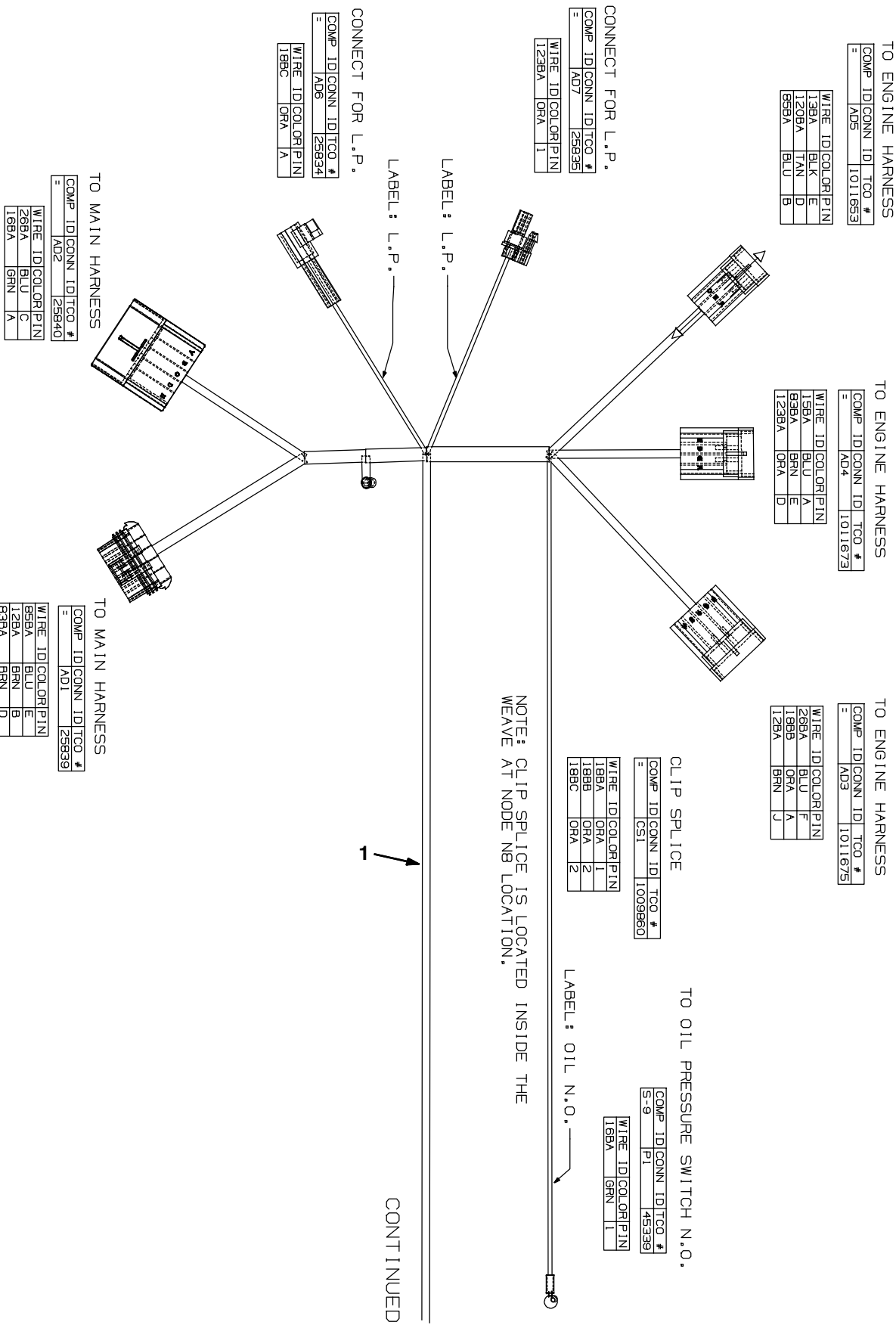

Fig. 106 - Wire Harnesses Group, Gas/LPG Adaptor (006000-006999)

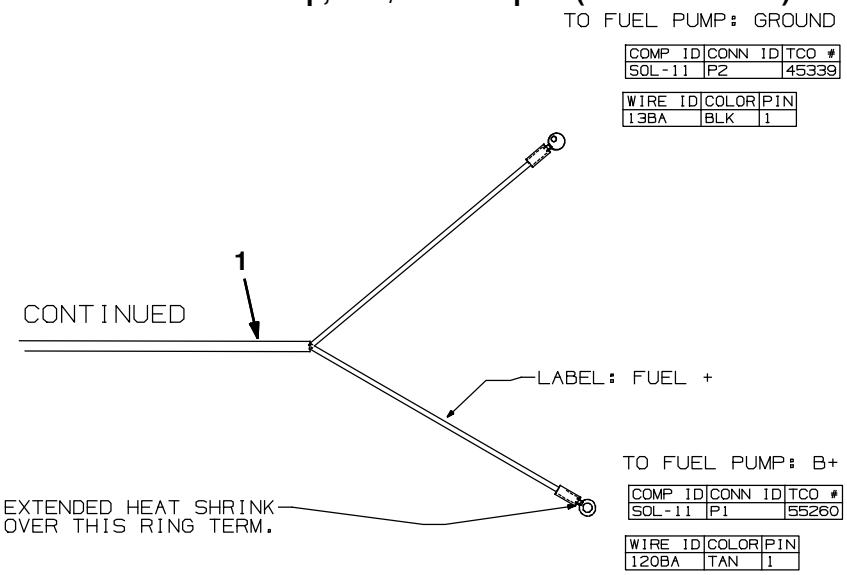

GM, G, LP

Ref.	Part No.	Serial Number	Description	Qty.
1	1012033	(006000-006999)	Harness, Adaptor [800/8410]	1

Fig. 107 - Wire Harnesses Group, Gas/LPG Adaptor (007000-)

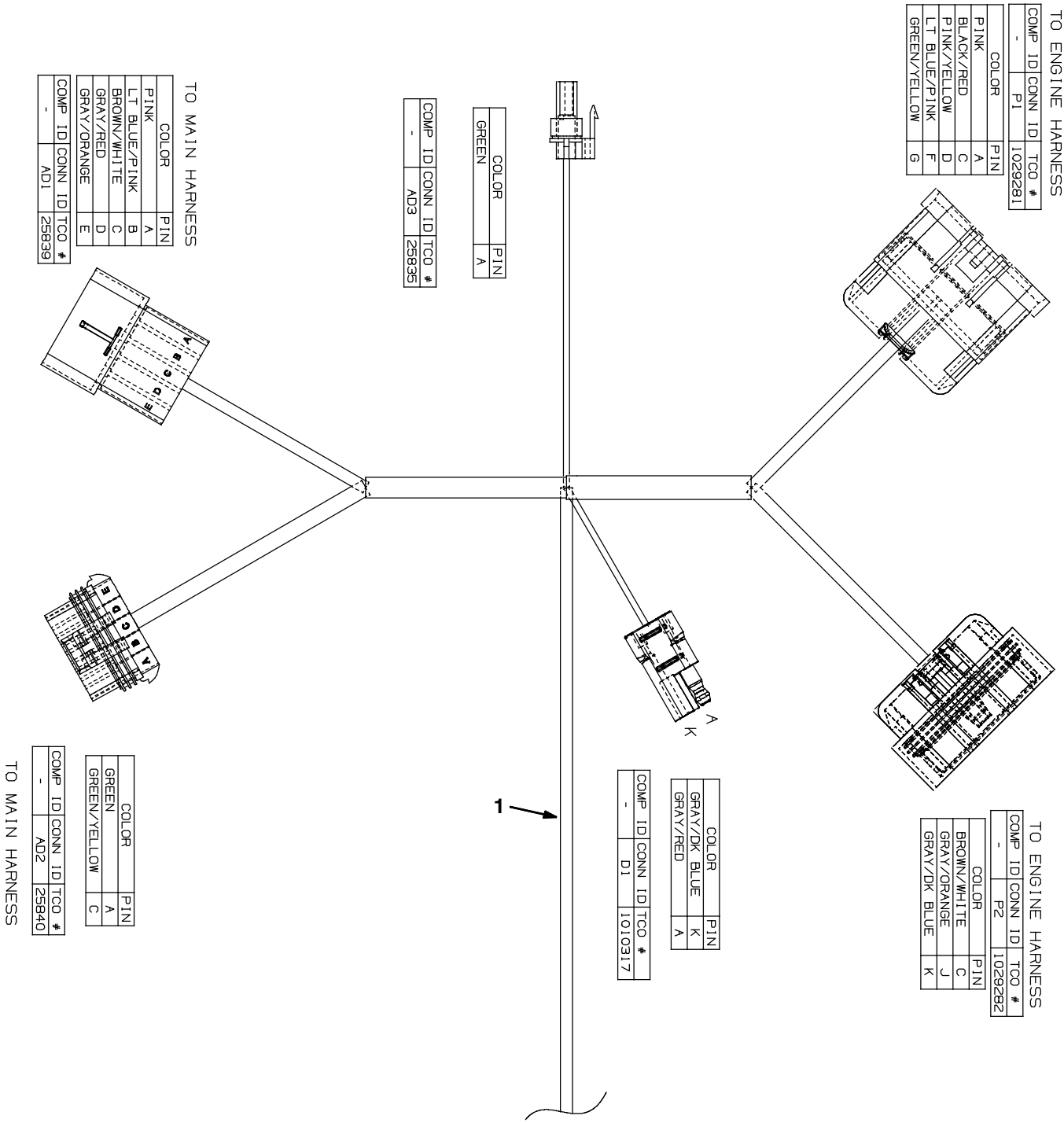

Fig. 107 - Wire Harnesses Group, Gas/LPG Adaptor (007000-)

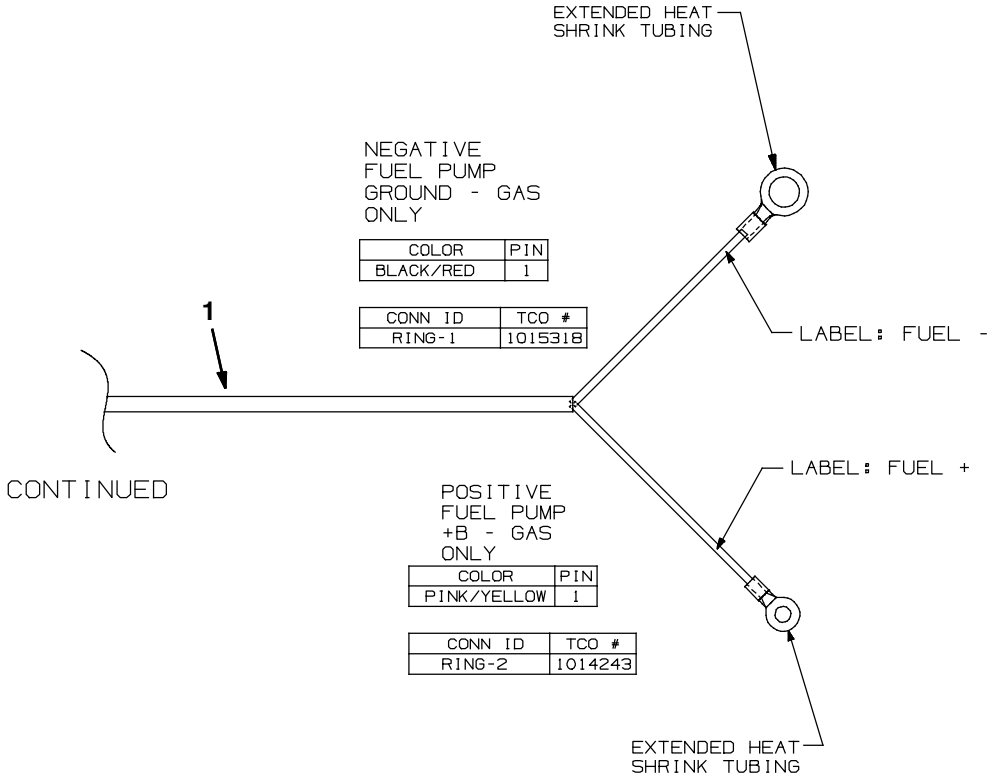

GM, G, LP

Ref.	Part No.	Serial Number	Description	Qty.
1	1032214	(007000-)	Harness, Adapter, Eng, Gas/Lpg [Gm3.0l]	1

Fig. 108 - Label Group

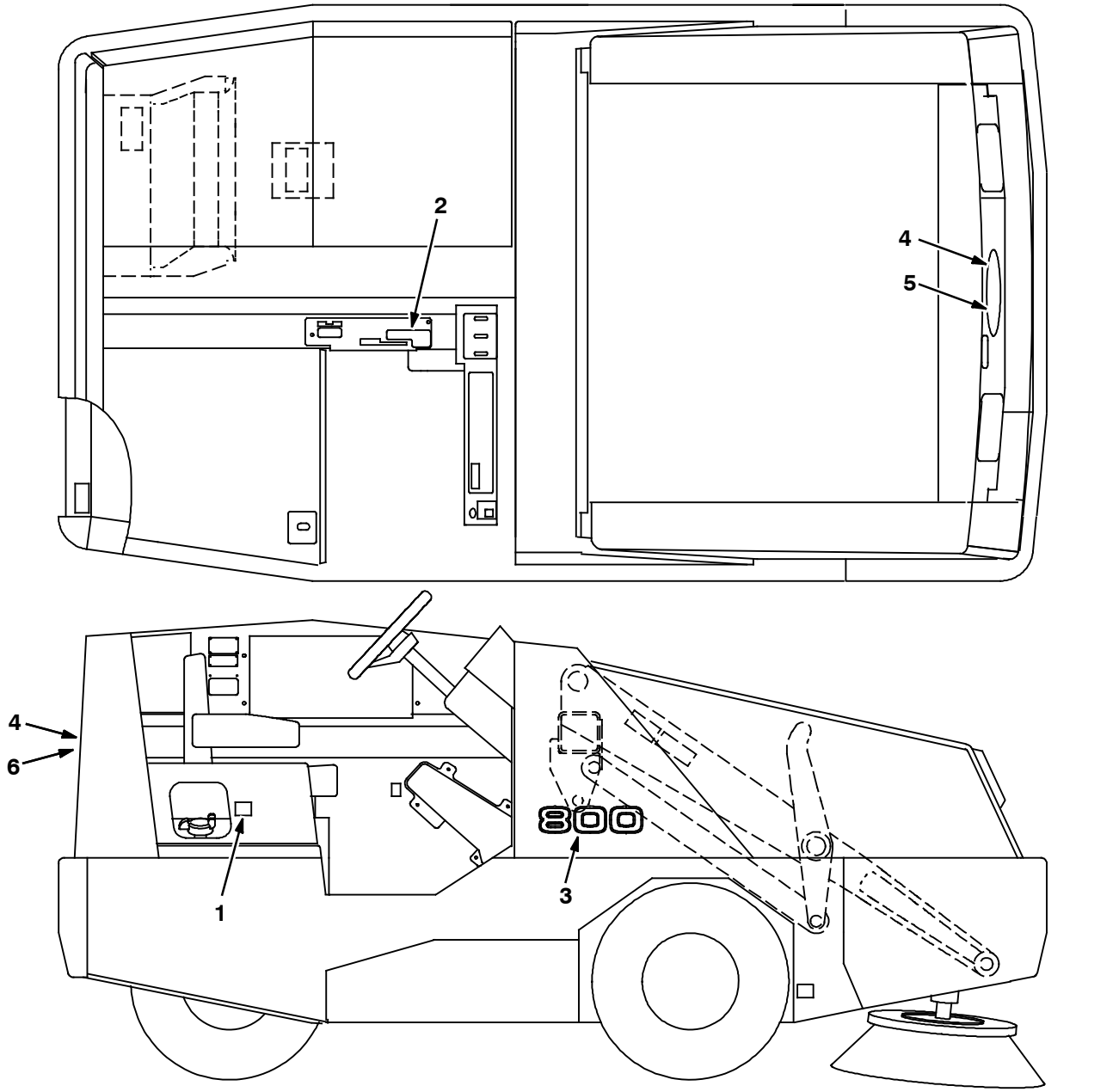

08774 - 800, NA

Ref.	Part No.	Serial Number	Description	Qty.
1	59767	(004000-)	Label Set, Info & Hazard	1
2	70705	(004000-)	Label Set, Operational 800	1
3	70536	(004000- 008088)	Label, Numerals 800	2
3	1074549	(008089-)	Label, Model [800 Gray]	2
4	09806	(004000- 008088)	Label, Logo, 10.4l,Oval[Tennant,Blu/Grn]	2
5	1214251	(008089-)	Nameplate, Tennant, Domed, 10 Inch	1
6	86877	(008089-)	Label, Logo, 10.4L Sht/Clr [Tennant]	1

SECTION 3

Contents **Page**

Fig. 1 - Light Kit, Flashing, Overhead Guard (004000- 008088) 3- 2
Fig. 2 - Light Kit, Flashing, Overhead Guard (008089-) 3- 4
Fig. 3 - Light Kit, Flashing, Cab (004000- 008088) 3- 6
Fig. 4 - Light Kit, Flashing, Cab (008089-) 3- 8
Fig. 5 - Light Kit, Strobe, Overhead Guard (004000- 008088) 3- 10
Fig. 6 - Light Kit, Strobe, Overhead Guard (008089-) 3- 12
Fig. 7 - Light Kit, Strobe, Cab (004000- 008088) 3- 14
Fig. 8 - Light Kit, Strobe, Cab (008089-) 3- 16
Fig. 9 - Light Kit, Flashing, Low (004000- 008088) 3- 18
Fig. 10 - Light Kit, Flashing, Low (008089-) 3- 20
Fig. 11 - Light Kit, Strobe, Low (004000- 008088) 3- 22
Fig. 12 - Light Kit, Strobe, Low (008089-) 3- 24
Fig. 13 - Back- Up Alarm Kit (004000- 008088) 3- 26
Fig. 14 - Back- Up Alarm Kit (008089-) 3- 28
Fig. 15 - Turn Signal Kit 3- 30
Fig. 16 - Overhead Guard Kit (004000- 008088) 3- 32
Fig. 17 - Overhead Guard Kit (008089-) 3- 34
Fig. 18 - Hopper Floor Kit (004000- 008088) . . 3- 36
Fig. 19 - Hopper Floor Kit (008089-) . . . 3- 37
Fig. 20 - Bumper Assembly, SE (004000- 008088) 3- 38
Fig. 21 - Bumper Assembly, SE (008089-) 3- 39
Fig. 22 - Side Brush Lift Group, L.H. 3- 40
Fig. 23 - Side Brush Group, L.H. 3- 44
Fig. 24 - Side Brush Pivot Group, L.H. 3- 46
Fig. 25 - Side Brush Wire Harness Group, L.H. 3- 48
Fig. 26 - Side Brush Hydraulic Hose Group, L.H. 3- 49
Fig. 27 - Side Brush Light Kit, (004000- 008088) 3- 50
Fig. 28 - Side Brush Light Kit, (008089-) 3- 52
Fig. 29 - Cab Kit 3- 54
Fig. 30 - Cab Mirror Kit (004000- 008088) 3- 56
Fig. 31 - Cab Mirror Kit (008089-) 3- 58
Fig. 32 - Cab Seals Group 3- 60
Fig. 33 - Cab AC and Heater Box Group, Ford 3- 62
Fig. 34 - Cab AC and Heater Hose Group, Ford 3- 64
Fig. 35 - Cab AC Compressor Group, Ford . . . 3- 66

Contents **Page**

Fig. 36 - Cab AC and Heater Box Group, GM (004937- 008088) 3- 68
Fig. 37 - Cab AC and Heater Box Group, GM (008089-) 3- 70
Fig. 38 - Cab AC and Heater Hose Group, GM 3- 72
Fig. 39 - Cab AC Compressor Group, GM (004937- 006999) 3- 74
Fig. 40 - Cab AC Compressor Group, GM (007000-) 3- 78
Fig. 41 - Cab Heater Box Group, Ford 3- 80
Fig. 42 - Cab Heater Hose Group, Ford 3- 82
Fig. 43 - Cab Heater Box Group, GM (004937 - 008088) 3- 84
Fig. 44 - Cab Heater Box Group, GM (008089 -) 3- 86
Fig. 45 - Cab Heater Hose Group, GM 3- 88
Fig. 46 - Alternator Group, SE, Ford 3- 90
Fig. 47 - Heavy Duty Alternator Kit, GM (004937- 006999) 3- 92
Fig. 48 - Heavy Duty Alternator Kit, GM (007000-) 3- 94
Fig. 49 - Vacuum Wand Kit (004000- 008088) 3- 96
Fig. 50 - Vacuum Wand Kit (008089-) 3- 98
Fig. 51 - Side Brush Dust Control Kit (004000- 008088) 3- 100
Fig. 52 - Side Brush Dust Control Kit (008089-) 3- 102
Fig. 53 - Protectoseal Fuel Tank Cap Group . 3- 104
Fig. 54 - Fire Extinguisher Kit 3- 105
Fig. 55 - Solid Tire and Rim Assembly 3- 106
Fig. 56 - Seat Belt Kit 3- 107
Fig. 57 - RFS Filter System Group 3- 108
Fig. 58 - Cab AC Drain Hose Kit 3- 110
Fig. 59 - Neutral Start Group 3- 112
Fig. 60 - Muffler Group, Non- Catalytic 3- 113
Fig. 61 - Documentation Group 3- 114

Fig. 1 - Light Kit, Flashing, Overhead Guard (004000-008088)

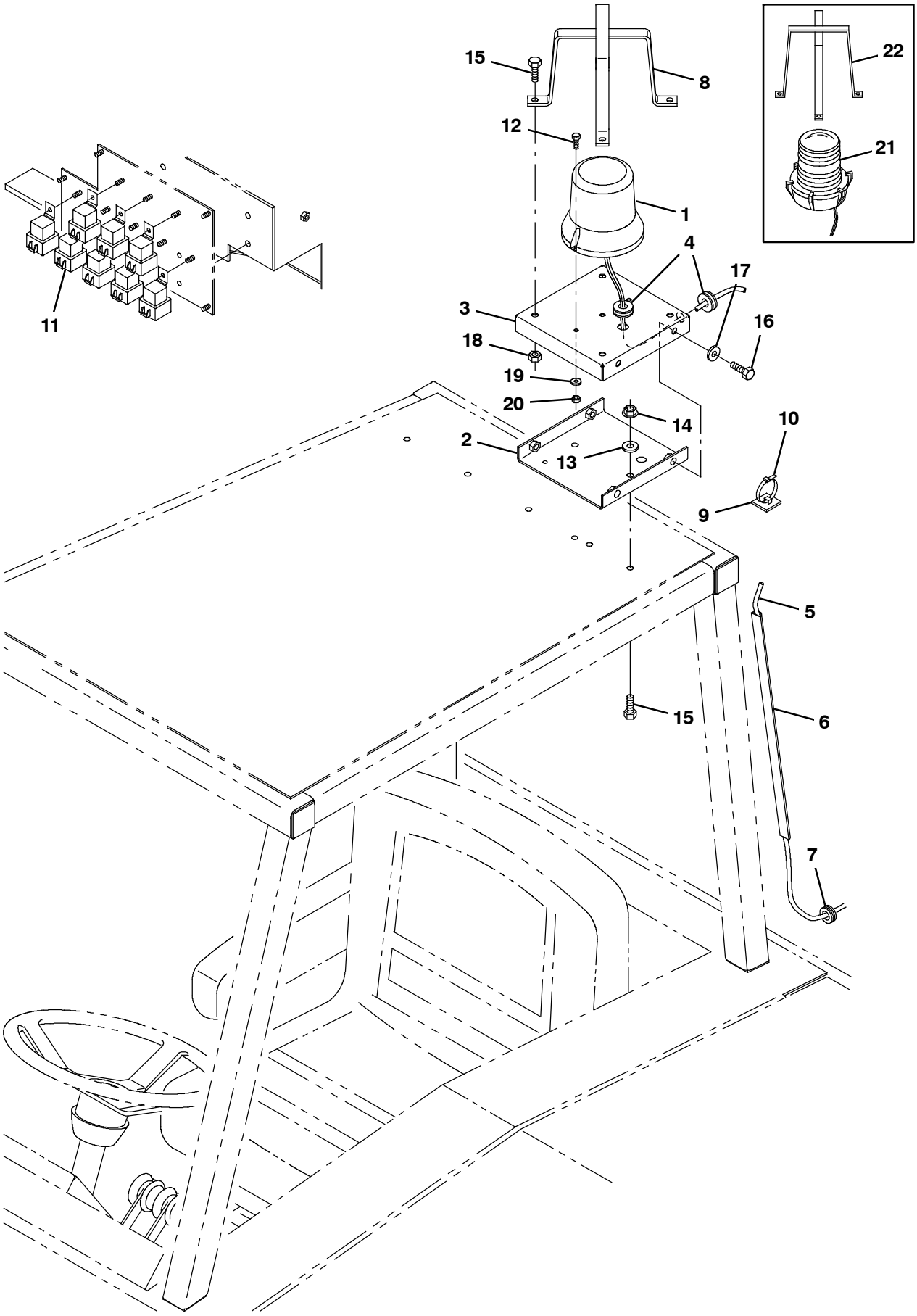

07654 - ALL

Fig. 1 - Light Kit, Flashing, Overhead Guard (004000-008088)

	Ref.	Part No.	Serial Number	Description	Qty.
▽		73755	(004000-008088)	Light Kit Flsh 800L Ohg	1
▲	1	1075283	(007677-008088)	Light, Strobe, Amb, 12-48vdc [Led]	1
▲	2	73899	(004000-008088)	Bracket	1
▲	3	73898	(004000-008088)	Panel	1
▲	4	10632-20	(004000-008088)	Grommet,Rbr,0.38Id,For .06Matl	2
▲	5	74000	(004000-008088)	Harness, Strobe/Flsh Light,Cab,Ohg	1
▲	6	1064050	(004000-008088)	Duct, Afmkt, Vyl, 0.40 X 0.75 .25d, 04ft	1
▲	7	10632-4	(004000-008088)	Grommet,Rbr,0.63Id,For .06Matl	1
▲	8	1070125	(007677-008088)	Guard Wldt, Light, Strobe/Flsh	1
▲	9	55248	(004000-008088)	Cable Tie Mount	1
▲	10	49266	(004000-008088)	Tie, Cable	1
▲	11	56186	(004000-008088)	Relay, Shrouded, 12V	1
▲	12	09244	(007677-008088)	Screw, Hex, M5 X 0.80 X 16, 8.8	2
▲	13	32490	(004000-008088)	Washer, Flat, 0.25, Std	2
▲	14	07791	(004000-008088)	Nut, Hex, Flng, M8 X 1.25	2
▲	15	16931	(004000-008088)	Screw, Hex, M8 X 1.25 X 20, 8.8	6
▲	16	15675	(004000-008088)	Screw, Hex, M8 X 1.25 X 16, Ss	4
▲	17	39349	(004000-008088)	Washer, Flat, 0.31, Sae	4
▲	18	08709	(004000-008088)	Nut, Hex, Lock, M8 X 1.25, Nl	4
▲	19	19066	(007677-008088)	Washer, Flat, 0.25b 0.56d .05, Pl, 10	2
▲	20	06549	(007677-008088)	Nut, Hex, Lock, M5 X 0.80, Nl	2
▽	21	82063	(004000-007676)	Light, Flashing, Amber, 12V-Re	1
▲		58520	(004000-007676)	Lens,Flashing Lite Fr207 Amber	1
▲		45779	(004000-007676)	Bulb, 12V	1
	22	45272	(004000-007676)	Guard Wldt, Lights, Strobe & Flsh	1
		58518	(004000-007676)	Lens,Flashing Lite Fr207 Red	1
		58519	(004000-007676)	Lens,Flashing Lite Fr207 Blue	1

Fig. 2 - Light Kit, Flashing, Overhead Guard (008089-)

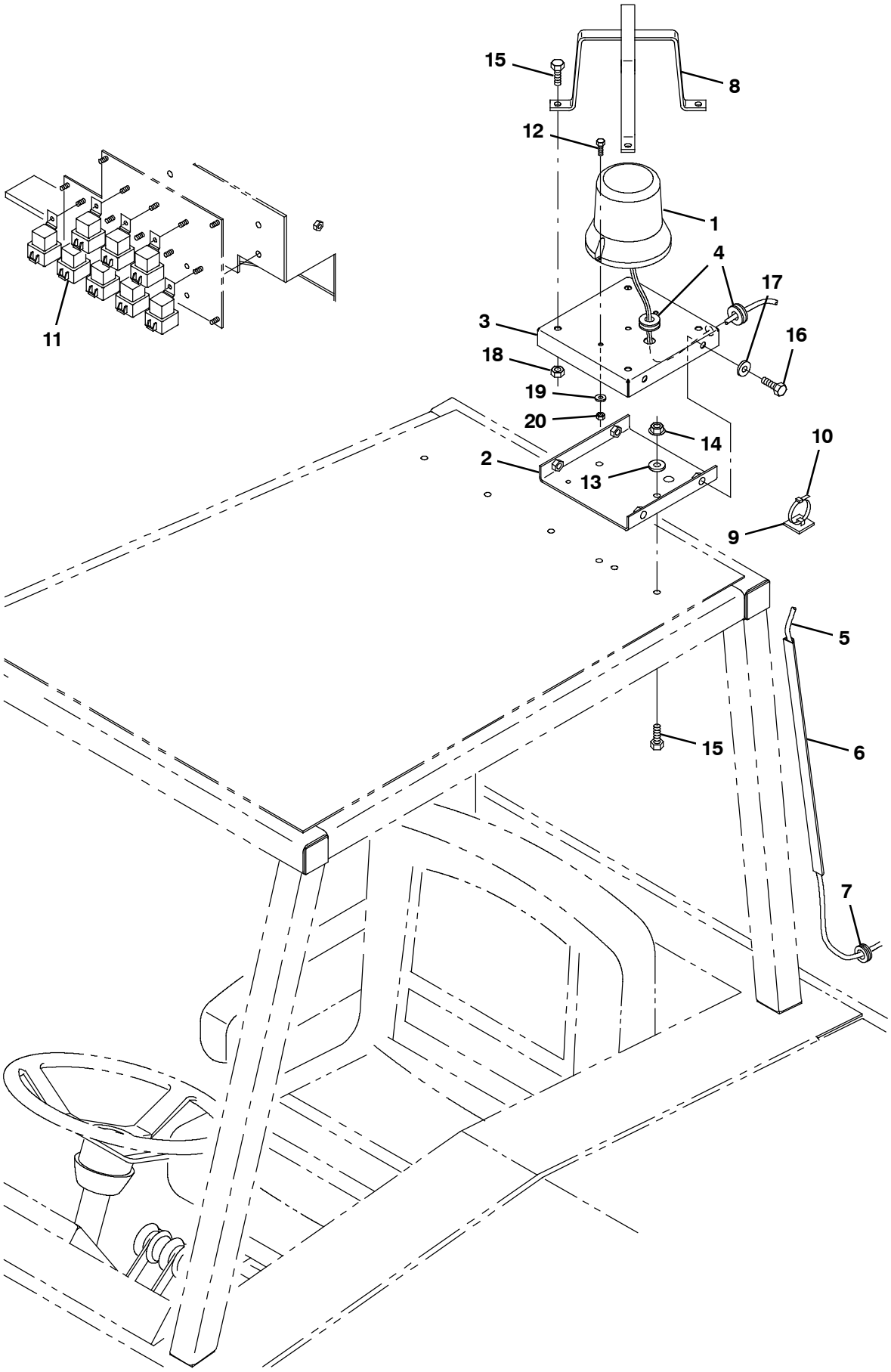

07654 - ALL

Fig. 2 - Light Kit, Flashing, Overhead Guard (008089-)

	Ref.	Part No.	Serial Number	Description	Qty.
▽		9012886	(008089-)	Light Kit, Flsh, Ohg, Ci [800 Gray]	1
▲	1	1075283	(008089-)	Light, Strobe, Amb, 12- 48vdc [Led]	1
▲	2	1073909	(008089-)	Bracket, Mtg, Lower, Light, Revl/Flsh	1
▲	3	1073894	(008089-)	Bracket, Mtg, Light [800 Gray]	1
▲	4	10632- 20	(008089-)	Grommet,Rbr,0.38Id,For .06Matl	2
▲	5	74000	(008089-)	Harness, Strobe/Flsh Light,Cab,Ohg	1
▲	6	1064050	(008089-)	Duct, Afmkt, Vyl, 0.40 X 0.75 .25d, 04ft	1
▲	7	10632- 4	(008089-)	Grommet,Rbr,0.63Id,For .06Matl	1
▲	8	1073934	(008089-)	Guard Wldt, Light, Revl/Flsh [800 Gray]	1
▲	9	55248	(008089-)	Cable Tie Mount	1
▲	10	49266	(008089-)	Tie, Cable	1
▲	11	56186	(008089-)	Relay, Shrouded, 12V	1
▲	12	09244	(008089-)	Screw, Hex, M5 X 0.80 X 16, 8.8	2
▲	13	32490	(008089-)	Washer, Flat, 0.25, Std	2
▲	14	07791	(008089-)	Nut, Hex, Flng, M8 X 1.25	2
▲	15	16931	(008089-)	Screw, Hex, M8 X 1.25 X 20, 8.8	6
▲	16	15675	(008089-)	Screw, Hex, M8 X 1.25 X 16, Ss	4
▲	17	39349	(008089-)	Washer, Flat, 0.31, Sae	4
▲	18	08709	(008089-)	Nut, Hex, Lock, M8 X 1.25, Nl	4
▲	19	19066	(008089-)	Washer, Flat, 0.25b 0.56d .05, Pl, 10	2
▲	20	06549	(008089-)	Nut, Hex, Lock, M5 X 0.80, Nl	2

Fig. 3 - Light Kit, Flashing, Cab (004000-008088)

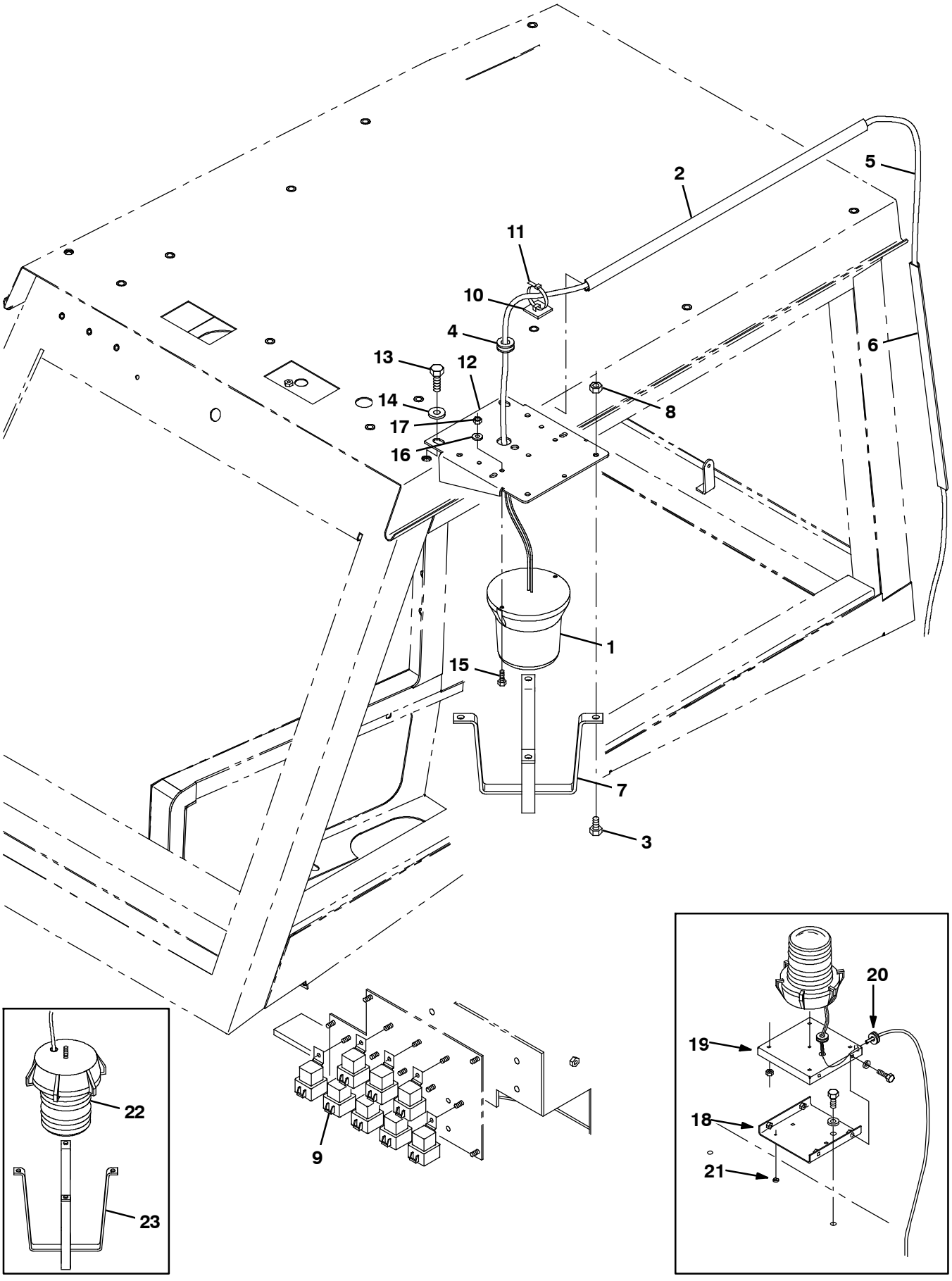

07658 - ALL

Fig. 3 - Light Kit, Flashing, Cab (004000-008088)

	Ref.	Part No.	Serial Number	Description	Qty.
▽		73751	(004000-008088)	Light Kit Flsh 800L Cab	1
▲	1	1075283	(007677-008088)	Light, Strobe, Amb, 12-48vdc [Led]	1
▲	2	1064050	(xxxxxx-008088)	Duct, Afmkt, Vyl, 0.40 X 0.75 .25d, 04ft	1
▲	3	15675	(004000-008088)	Screw, Hex, M8 X 1.25 X 16, Ss	4
▲	4	10632-20	(004000-008088)	Grommet,Rbr,0.38Id,For .06Matl	1
▲	5	74000	(004000-008088)	Harness, Strobe/Flsh Light,Cab,Ohg	1
▲	6	1064050	(004000-008088)	Duct, Afmkt, Vyl, 0.40 X 0.75 .25d, 04ft	1
▲	7	1070125	(007677-008088)	Guard Wldt, Light, Strobe/Flsh	1
▲	8	08709	(004000-008088)	Nut, Hex, Lock, M8 X 1.25, Nl	4
▲	9	56186	(004000-008088)	Relay, Shrouded, 12V	1
▲	10	55248	(004000-008088)	Cable Tie Mount	1
▲	11	49266	(004000-008088)	Tie, Cable	1
▲	12	1066763	(xxxxxx-008088)	Bracket, Mtg, Light, Rotating	1
▲	13	09028	(xxxxxx-008088)	Screw, Hex, M10 X 1.50 X 25, Ss	2
▲	14	32492	(xxxxxx-008088)	Washer, Flat, 0.38, Std	2
▲	15	09244	(007677-008088)	Screw, Hex, M5 X 0.80 X 16, 8.8	2
▲	16	19066	(007677-008088)	Washer, Flat, 0.25b 0.56d .05, Pl, 10	2
▲	17	06549	(007677-008088)	Nut, Hex, Lock, M5 X 0.80, Nl	2
	18	73899	(004000- xxxxxx)	Bracket	1
	19	73898	(004000- xxxxxx)	Panel	1
	20	10632-20	(004000- xxxxxx)	Grommet,Rbr,0.38Id,For .06Matl	1
	21	29233	(004000- xxxxxx)	Bumper, Rubber	4
▽	22	82063	(004000-007676)	Light, Flashing, Amber, 12V-Re	1
▲		58520	(004000-007676)	Lens,Flashing Lite Fr207 Amber	1
▲		45779	(004000-007676)	Bulb, 12V	1
	23	45272	(004000-007676)	Guard Wldt, Lights, Strobe & Flsh	1
		58518	(004000-007676)	Lens,Flashing Lite Fr207 Red	1
		58519	(004000-007676)	Lens,Flashing Lite Fr207 Blue	1

Fig. 4 - Light Kit, Flashing, Cab (008089-)

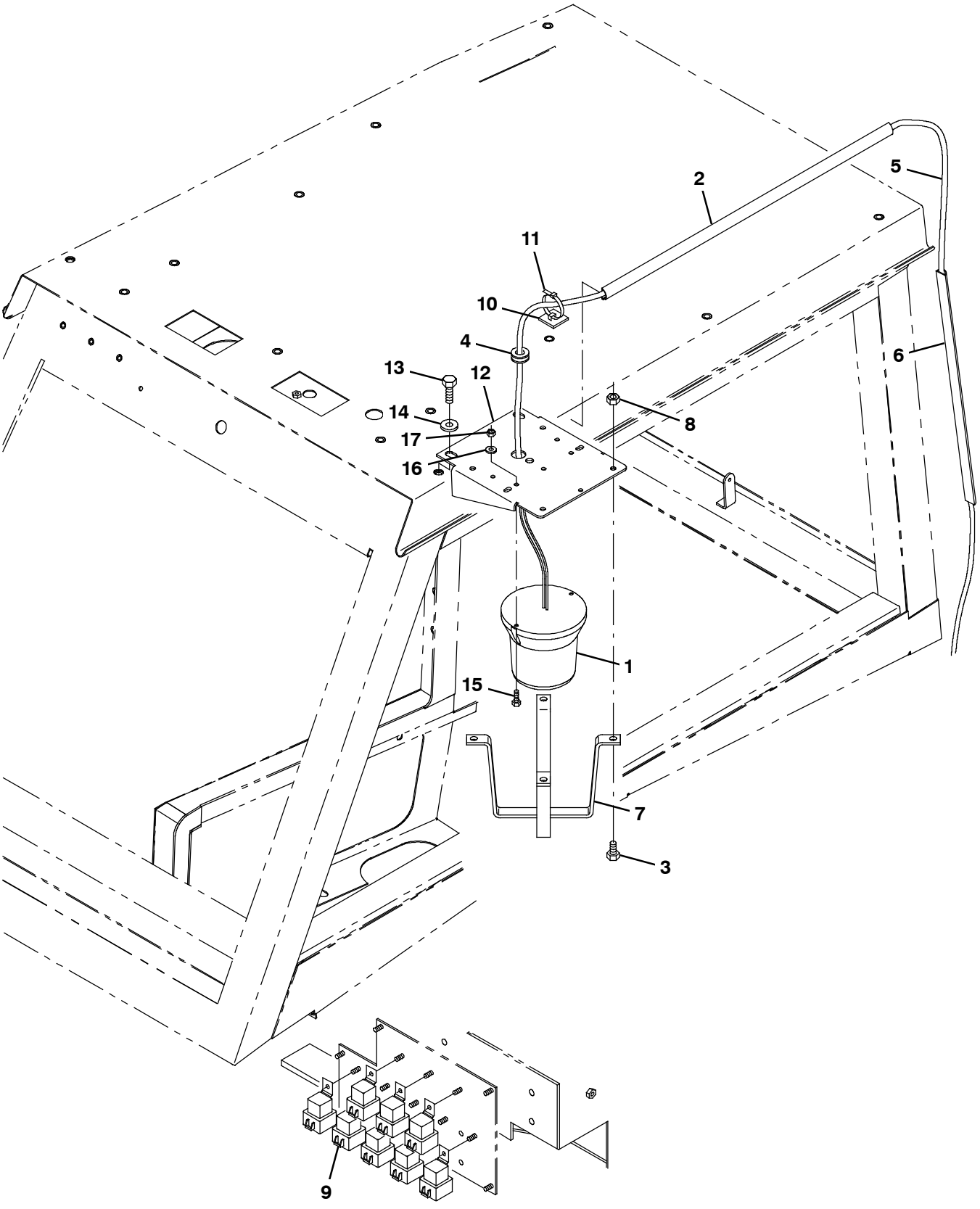

07658 - ALL

Fig. 4 - Light Kit, Flashing, Cab (008089-)

	Ref.	Part No.	Serial Number	Description	Qty.
▽		9012855	(008089-)	Light Kit, Flsh, Cab, Ci [800 Gray]	1
▲	1	1075283	(008089-)	Light, Strobe, Amb, 12- 48vdc [Led]	1
▲	2	1064050	(008089-)	Duct, Afmkt, Vyl, 0.40 X 0.75 .25d, 04ft	1
▲	3	15675	(008089-)	Screw, Hex, M8 X 1.25 X 16, Ss	4
▲	4	10632- 20	(008089-)	Grommet,Rbr,0.38Id,For .06Matl	1
▲	5	74000	(008089-)	Harness, Strobe/Flsh Light,Cab,Ohg	1
▲	6	1064050	(008089-)	Duct, Afmkt, Vyl, 0.40 X 0.75 .25d, 04ft	1
▲	7	1073934	(008089-)	Guard Wldt, Light, Revl/Flsh [800 Gray]	1
▲	8	08709	(008089-)	Nut, Hex, Lock, M8 X 1.25, Nl	4
▲	9	56186	(008089-)	Relay, Shrouded, 12V	1
▲	10	55248	(008089-)	Cable Tie Mount	1
▲	11	49266	(008089-)	Tie, Cable	1
▲	12	1073933	(008089-)	Bracket, Mtg, Light, Rotating [800 Gray]	1
▲	13	09028	(008089-)	Screw, Hex, M10 X 1.50 X 25, Ss	2
▲	14	32492	(008089-)	Washer, Flat, 0.38, Std	2
▲	15	09244	(008089-)	Screw, Hex, M5 X 0.80 X 16, 8.8	2
▲	16	19066	(008089-)	Washer, Flat, 0.25b 0.56d .05, Pl, 10	2
▲	17	06549	(008089-)	Nut, Hex, Lock, M5 X 0.80, Nl	2

Fig. 5 - Light Kit, Strobe, Overhead Guard (004000-008088)

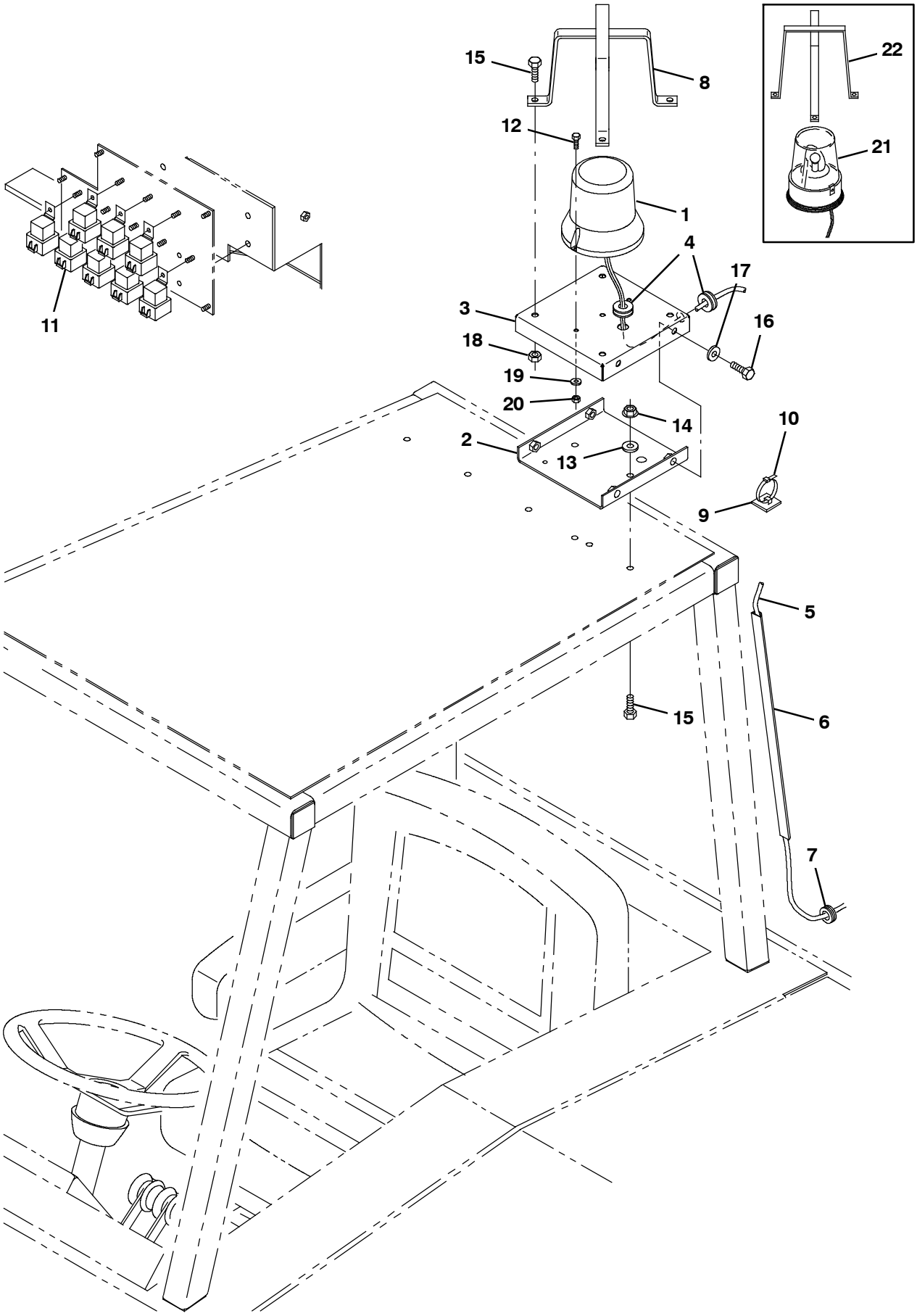

07654/07656 - ALL

Fig. 5 - Light Kit, Strobe, Overhead Guard (004000-008088)

	Ref.	Part No.	Serial Number	Description	Qty.
▽		73757	(004000-008088)	Light Kit Strobe 800L Ohg	1
▲	1	1075283	(007677-008088)	Light, Strobe, Amb, 12-48vdc [Led]	1
▲	2	73899	(004000-008088)	Bracket	1
▲	3	73898	(004000-008088)	Panel	1
▲	4	10632-20	(004000-008088)	Grommet,Rbr,0.38Id,For .06Matl	2
▲	5	74000	(004000-008088)	Harness, Strobe/Flsh Light,Cab,Ohg	1
▲	6	1064050	(004000-008088)	Duct, Afmkt, Vyl, 0.40 X 0.75 .25d, 04ft	1
▲	7	10632-4	(004000-008088)	Grommet,Rbr,0.63Id,For .13Matl	1
▲	8	1070125	(007677-008088)	Guard Wldt, Light, Strobe/Flsh	1
▲	9	55248	(004000-008088)	Cable Tie Mount	1
▲	10	49266	(004000-008088)	Tie, Cable	1
▲	11	56186	(004000-008088)	Relay, Shrouded, 12V	1
▲	12	09244	(007677-008088)	Screw, Hex, M5 X 0.80 X 16, 8.8	2
▲	13	32490	(004000-008088)	Washer, Flat, 0.25, Std	2
▲	14	07791	(004000-008088)	Nut, Hex, Flng, M8 X 1.25	2
▲	15	16931	(004000-008088)	Screw, Hex, M8 X 1.25 X 20, 8.8	6
▲	16	15675	(004000-008088)	Screw, Hex, M8 X 1.25 X 16, Ss	4
▲	17	39349	(004000-008088)	Washer, Flat, 0.31, Sae	4
▲	18	08709	(004000-008088)	Nut, Hex, Lock, M8 X 1.25, Nl	4
▲	19	19066	(007677-008088)	Washer, Flat, 0.25b 0.56d .05, Pl, 10	2
▲	20	06549	(007677-008088)	Nut, Hex, Lock, M5 X 0.80, Nl	2
▽	21	82200	(004000-007676)	Light, Strobe.Amber 12V-Reworked	1
▲		44681-1	(004000-007676)	Lens, Strobe.Light,Amber	1
▲		45779	(004000-007676)	Bulb, 12V	1
▲	22	45272	(004000-007676)	Guard Wldt, Lights, Strobe & Flsh	1
		44681	(004000-007676)	Lens, Strobe.Light,Red	1
		44681-2	(004000-007676)	Lens, Strobe.Light,Blue	1

Fig. 6 - Light Kit, Strobe, Overhead Guard (008089-)

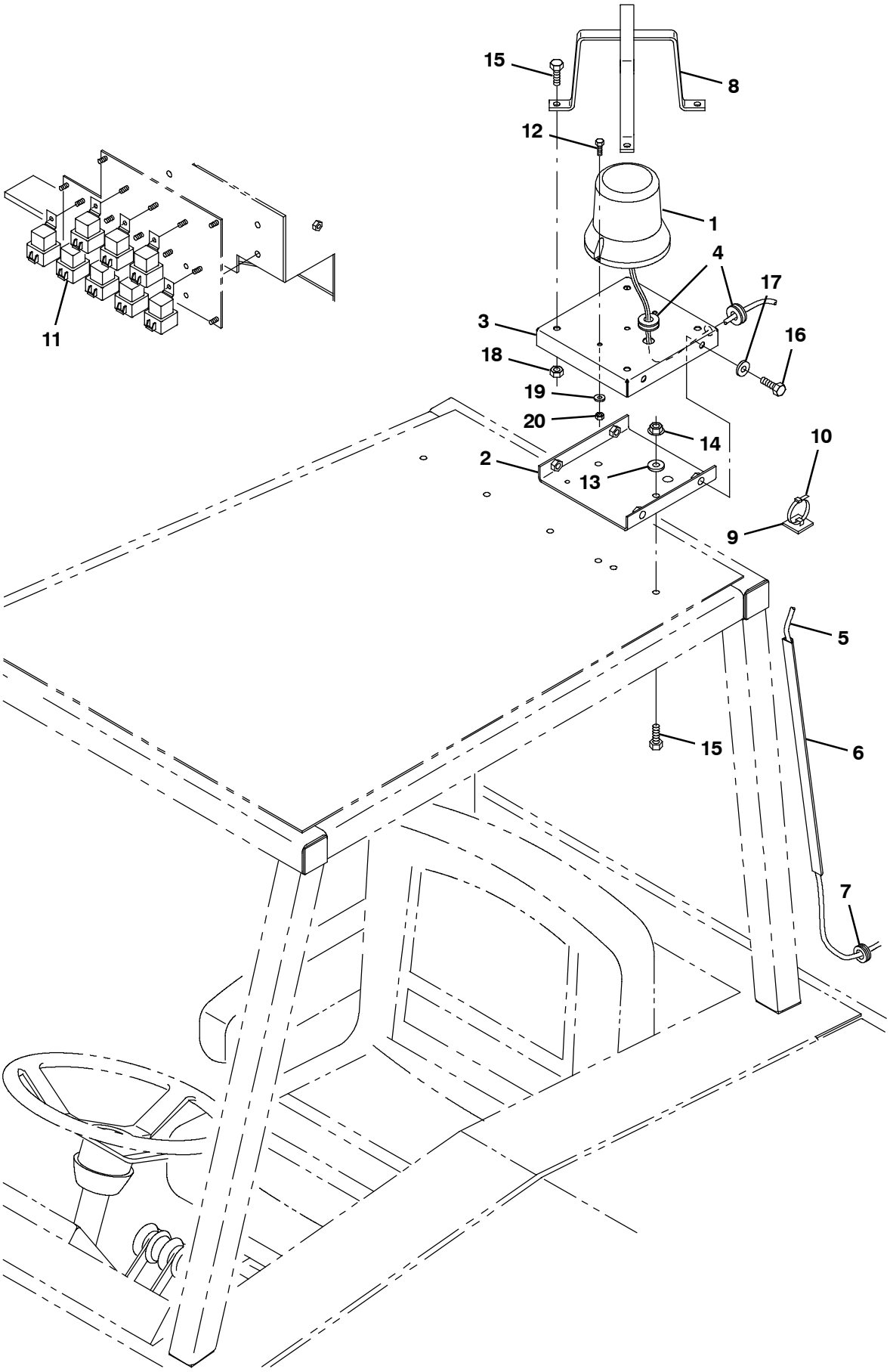

07654/07656 - ALL

Fig. 6 - Light Kit, Strobe, Overhead Guard (008089-)

	Ref.	Part No.	Serial Number	Description	Qty.
▽		9012885	(008089-)	Light Kit, Strobe, Ohg, Ci [800l Gray]	1
▲	1	1075283	(008089-)	Light, Strobe, Amb, 12- 48vdc [Led]	1
▲	2	1073909	(008089-)	Bracket, Mtg, Lower, Light, Revl/Flsh	1
▲	3	1073894	(008089-)	Bracket, Mtg, Light [800 Gray]	1
▲	4	10632- 20	(008089-)	Grommet,Rbr,0.38Id,For .06Matl	2
▲	5	74000	(008089-)	Harness, Strobe/Flsh Light,Cab,Ohg	1
▲	6	1064050	(008089-)	Duct, Afmkt, Vyl, 0.40 X 0.75 .25d, 04ft	1
▲	7	10632- 4	(008089-)	Grommet,Rbr,0.63Id,For .13Matl	1
▲	8	1073934	(008089-)	Guard Wldt, Light, Revl/Flsh [800 Gray]	1
▲	9	55248	(008089-)	Cable Tie Mount	1
▲	10	49266	(008089-)	Tie, Cable	1
▲	11	56186	(008089-)	Relay, Shrouded, 12V	1
▲	12	09244	(008089-)	Screw, Hex, M5 X 0.80 X 16, 8.8	2
▲	13	32490	(008089-)	Washer, Flat, 0.25, Std	2
▲	14	07791	(008089-)	Nut, Hex, Flng, M8 X 1.25	2
▲	15	16931	(008089-)	Screw, Hex, M8 X 1.25 X 20, 8.8	6
▲	16	15675	(008089-)	Screw, Hex, M8 X 1.25 X 16, Ss	4
▲	17	39349	(008089-)	Washer, Flat, 0.31, Sae	4
▲	18	08709	(008089-)	Nut, Hex, Lock, M8 X 1.25, Nl	4
▲	19	19066	(008089-)	Washer, Flat, 0.25b 0.56d .05, Pl, 10	2
▲	20	06549	(008089-)	Nut, Hex, Lock, M5 X 0.80, Nl	2

Fig. 7 - Light Kit, Strobe, Cab (004000-008088)

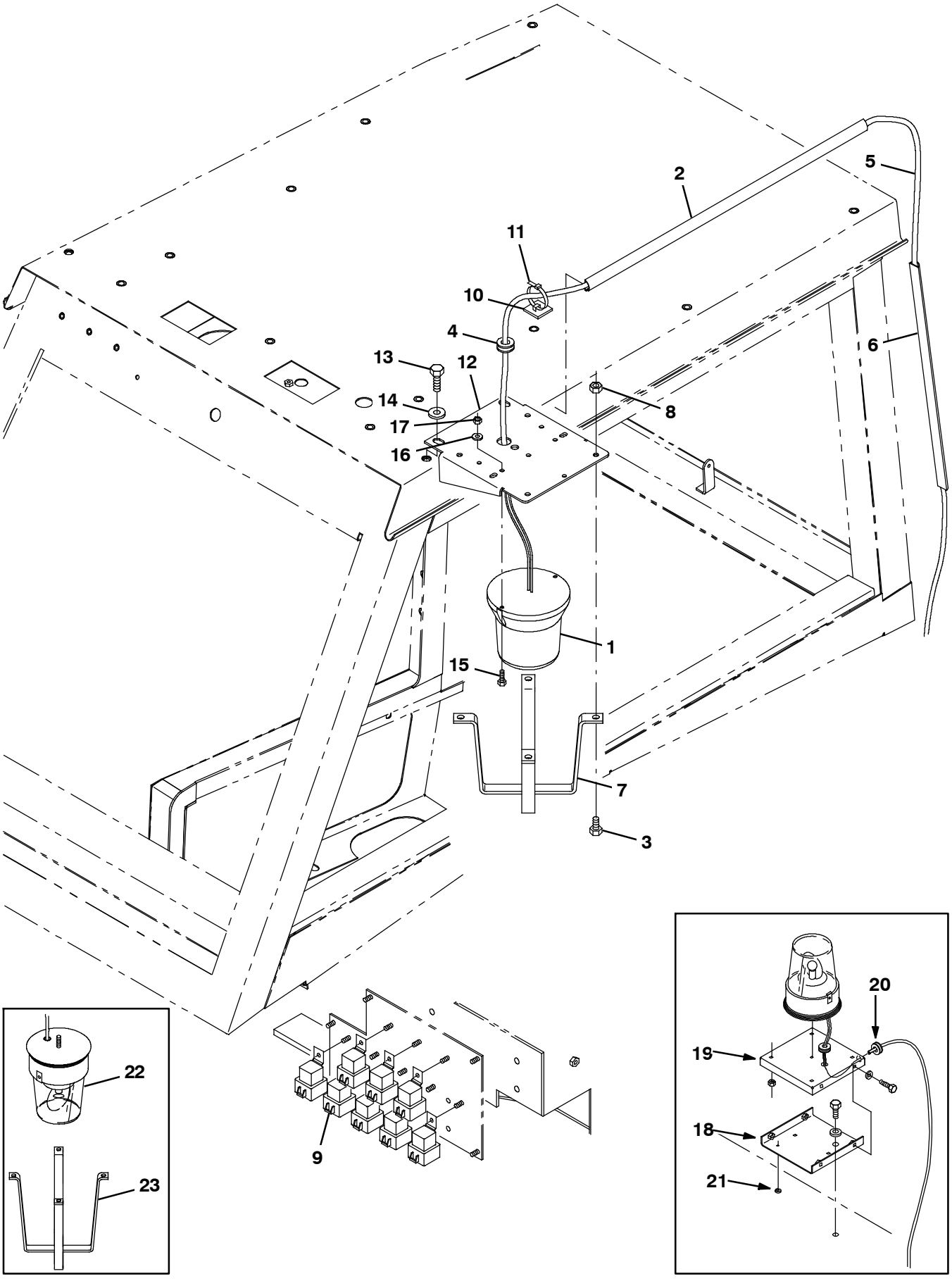

07658/07660 - ALL

Fig. 7 - Light Kit, Strobe, Cab (004000-008088)

	Ref.	Part No.	Serial Number	Description	Qty.
▽		73753	(004000-008088)	Light Kit Strobe 800L Cab	1
▲	1	1075283	(007677-008088)	Light, Strobe, Amb, 12-48vdc [Led]	1
▲	2	1064050	(xxxxxx-008088)	Duct, Afmkt, Vyl, 0.40 X 0.75 .25d, 04ft	1
▲	3	15675	(004000-008088)	Screw, Hex, M8 X 1.25 X 16, Ss	4
▲	4	10632-20	(004000-008088)	Grommet,Rbr,0.38Id,For .06Matl	1
▲	5	74000	(004000-008088)	Harness, Strobe/Flsh Light,Cab,Ohg	1
▲	6	1064050	(004000-008088)	Duct, Afmkt, Vyl, 0.40 X 0.75 .25d, 04ft	1
▲	7	1070125	(004000-)	Guard Wldt, Light, Revl/Flsh	1
▲	8	08709	(004000-008088)	Nut, Hex, Lock, M8 X 1.25, Nl	4
▲	9	56186	(004000-008088)	Relay, Shrouded, 12V	1
▲	10	55248	(004000-008088)	Cable Tie Mount	1
▲	11	49266	(004000-008088)	Tie, Cable	1
▲	12	1066763	(xxxxxx-008088)	Bracket, Mtg, Light, Rotating	1
▲	13	09028	(xxxxxx-008088)	Screw, Hex, M10 X 1.50 X 25, Ss	2
▲	14	32492	(xxxxxx-008088)	Washer, Flat, 0.38, Std	2
▲	15	09244	(007677-008088)	Screw, Hex, M5 X 0.80 X 16, 8.8	2
▲	16	19066	(007677-008088)	Washer, Flat, 0.25b 0.56d .05, Pl, 10	2
▲	17	06549	(007677-008088)	Nut, Hex, Lock, M5 X 0.80, Nl	2
	18	73899	(004000- xxxxxx)	Bracket	1
	19	73898	(004000- xxxxxx)	Panel	1
	20	10632-20	(004000- xxxxxx)	Grommet,Rbr,0.38Id,For .06Matl	1
	21	29233	(004000- xxxxxx)	Bumper, Rubber	1
▽	22	82200	(004000-007676)	Light, Strobe.Amber 12V-Reworked	1
▲		44681-1	(004000-007676)	Lens, Strobe.Light,Amber	1
▲		45779	(004000-007676)	Bulb, 12V	1
	23	45272	(004000-007676)	Guard Wldt, Lights, Strobe & Flsh	1
		44681	(004000-007676)	Lens, Strobe Light, Red	1
		44681-2	(004000-007676)	Lens, Strobe Light, Blue	1

Fig. 8 - Light Kit, Strobe, Cab (008089-)

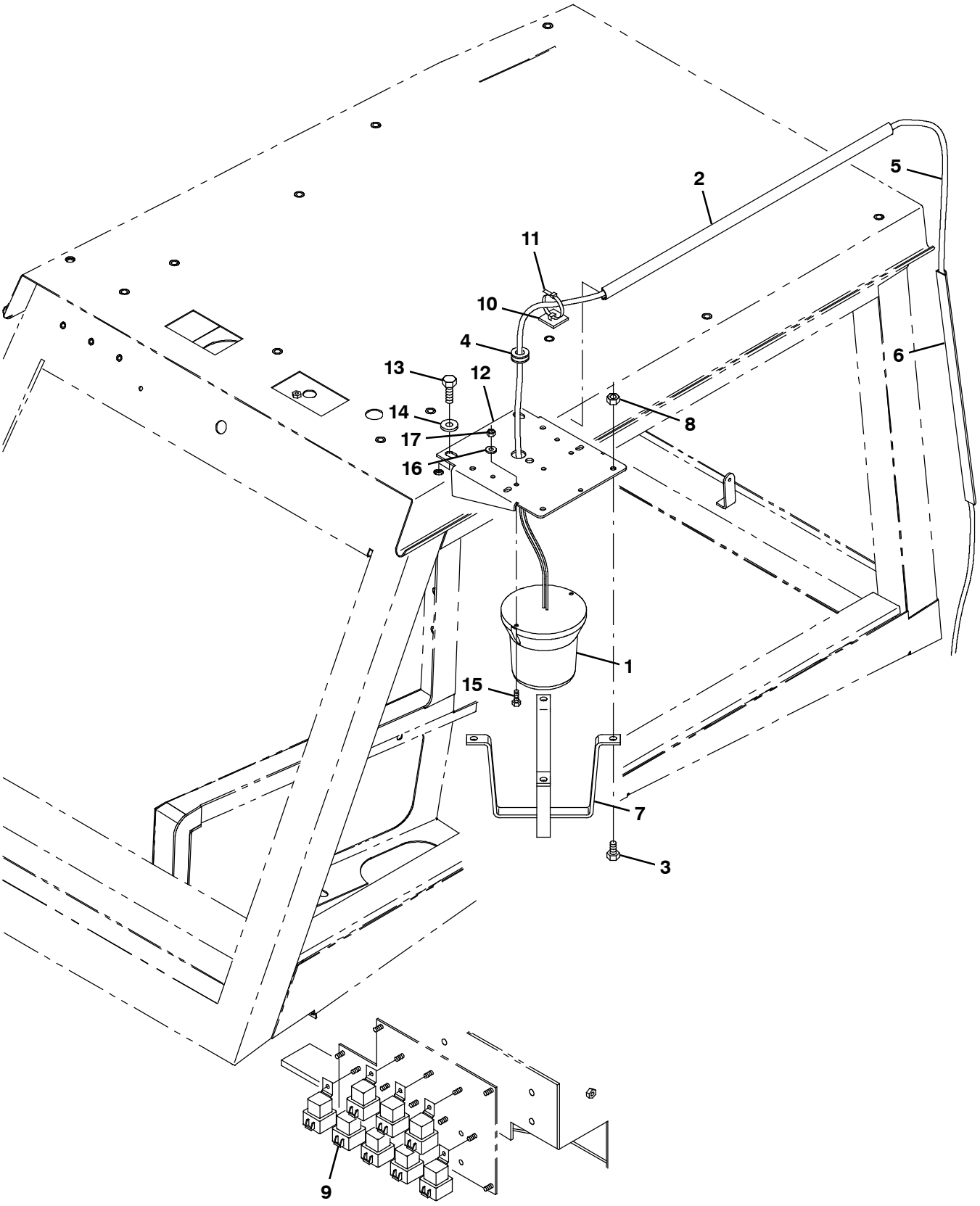

07658/07660 - ALL

Fig. 8 - Light Kit, Strobe, Cab (008089-)

	Ref.	Part No.	Serial Number	Description	Qty.
▽		9012856	(008089-)	Light Kit, Revl, Cab, Ci [800l Gray]	1
▲	1	1075283	(008089-)	Light, Strobe, Amb, 12- 48vdc [Led]	1
▲	2	1064050	(008089-)	Duct, Afmkt, Vyl, 0.40 X 0.75 .25d, 04ft	1
▲	3	15675	(008089-)	Screw, Hex, M8 X 1.25 X 16, Ss	4
▲	4	10632- 20	(008089-)	Grommet,Rbr,0.38Id,For .06Matl	1
▲	5	74000	(008089-)	Harness, Strobe/Flsh Light,Cab,Ohg	1
▲	6	1064050	(008089-)	Duct, Afmkt, Vyl, 0.40 X 0.75 .25d, 04ft	1
▲	7	1073934	(008089-)	Guard Wldt, Light, Revl/Flsh [800 Gray]	1
▲	8	08709	(008089-)	Nut, Hex, Lock, M8 X 1.25, Nl	4
▲	9	56186	(008089-)	Relay, Shrouded, 12V	1
▲	10	55248	(008089-)	Cable Tie Mount	1
▲	11	49266	(008089-)	Tie, Cable	1
▲	12	1073933	(008089-)	Bracket, Mtg, Light, Rotating [800 Gray]	1
▲	13	09028	(008089-)	Screw, Hex, M10 X 1.50 X 25, Ss	2
▲	14	32492	(008089-)	Washer, Flat, 0.38, Std	2
▲	15	09244	(008089-)	Screw, Hex, M5 X 0.80 X 16, 8.8	2
▲	16	19066	(008089-)	Washer, Flat, 0.25b 0.56d .05, Pl, 10	2
▲	17	06549	(008089-)	Nut, Hex, Lock, M5 X 0.80, Nl	2

Fig. 9 - Light Kit, Flashing, Low (004000-008088)

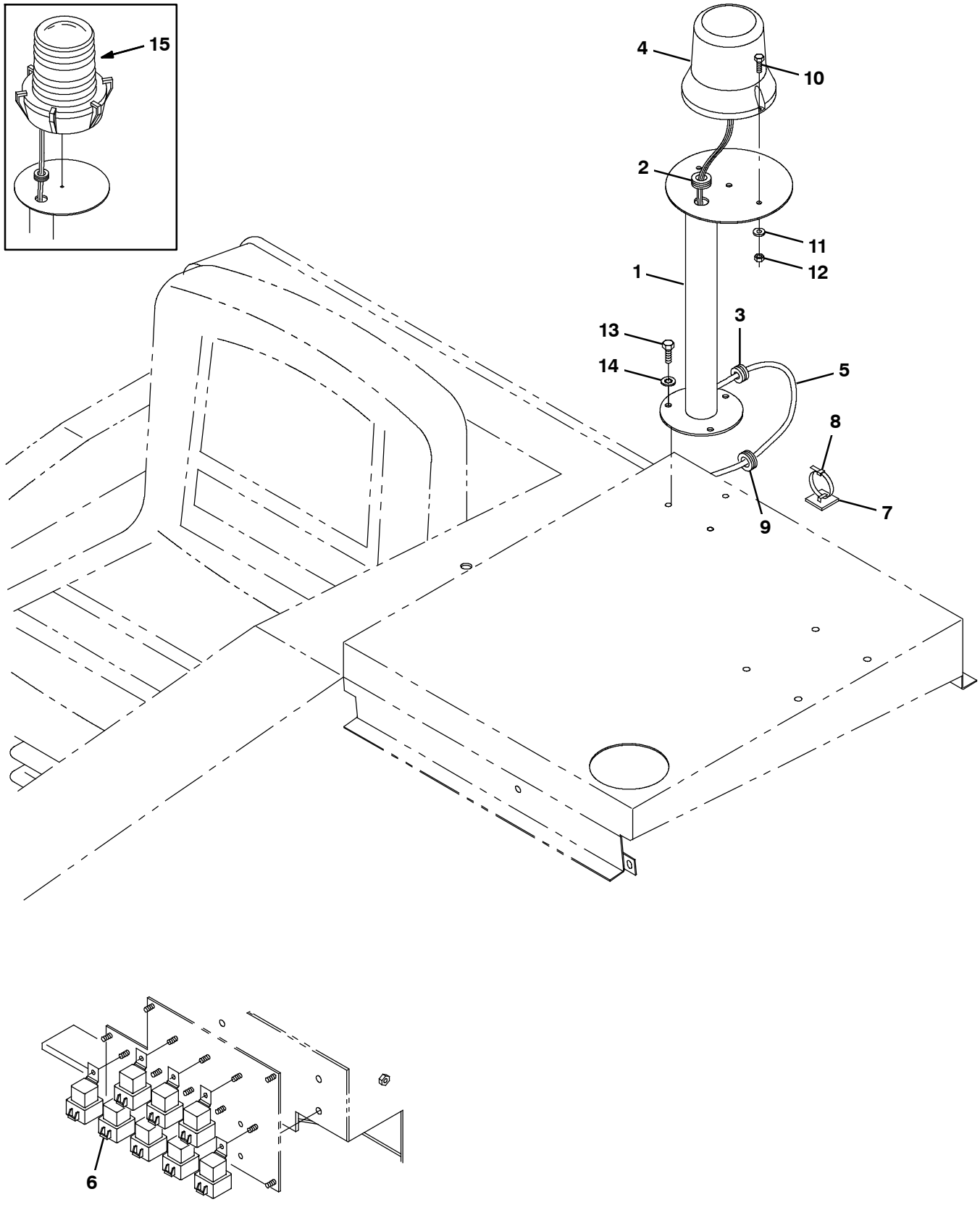

351133 - ALL

Fig. 9 - Light Kit, Flashing, Low (004000- 008088)

	Ref.	Part No.	Serial Number	Description	Qty.
▽		380643	(004000- 008088)	Kit, Light, Flsh, Low	1
▲	1	31954	(004000- 008088)	Pedestal Wldt, Light	1
▲	2	10632- 9	(004000- 008088)	Grommet, Rbr, 0.56 Id For .13mat	1
▲	3	10632- 12	(004000- 008088)	Grommet, Rbr, 0.38 Id For .12mat	1
▲	4	1075283	(007677- 008088)	Light, Strobe, Amb, 12- 48vdc [Led]	1
▲	5	380691	(004000- 008088)	Harness, Alarm, Backup	1
▲	6	56186	(004000- 008088)	Relay 12Vdc 40A Spdt	1
▲	7	55248	(004000- 008088)	Cabletie Mount, Adhesive	2
▲	8	49266	(004000- 008088)	Tie, Cable 1.75D Max 7.50Lg	2
▲	9	10632- 4	(004000- 008088)	Grommet	1
▲	10	09244	(007677- 008088)	Screw, Hex, M5 X 0.80 X 16, 8.8	2
▲	11	19066	(007677- 008088)	Washer, Flat, 0.25b 0.56d .05, Pl, 10	2
▲	12	06549	(007677- 008088)	Nut, Hex, Lock, M5 X 0.80, Nl	2
▲	13	06943	(004000- 008088)	Screw, Hex, M6 X 1.00 X 20, 8.8	3
▲	14	32982	(004000- 008088)	Washer, Lock, Int, 0.25	3
▽	15	82063	(004000- 007676)	Light, Flashing Amb 12v- re	1
▲		58520	(004000- 007676)	Lens, Flashing Amb 12V	1
▲		45779	(004000- 007676)	Bulb	1
		44681	(004000- 007676)	Lens, Strobe Light, Red	1
		44681- 2	(004000- 007676)	Lens, Strobe Light, Blue	1

Fig. 10 - Light Kit, Flashing, Low (008089-)

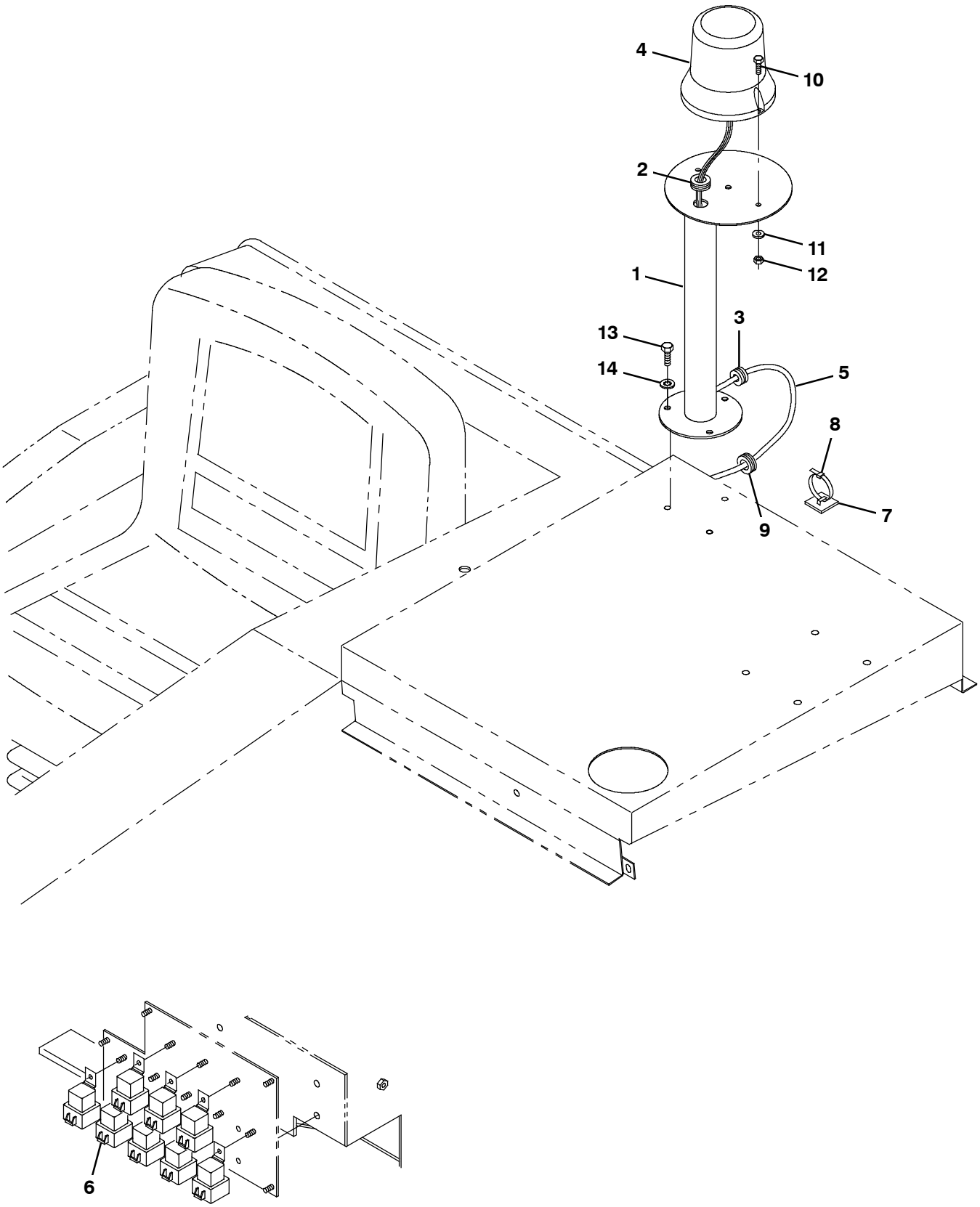

351133 - ALL

Fig. 10 - Light Kit, Flashing, Low (008089-)

	Ref.	Part No.	Serial Number	Description	Qty.
▽		9012853	(008089-)	Light Kit, Flsh, Ped, Ci [800 Gray]	1
▲	1	1073876	(008089-)	Pedestal Wldt, Light [800 Gray]	1
▲	2	10632- 9	(008089-)	Grommet, Rbr, 0.56 Id For .13mat	1
▲	3	10632- 12	(008089-)	Grommet, Rbr, 0.38 Id For .12mat	1
▲	4	1075283	(008089-)	Light, Strobe, Amb, 12- 48vdc [Led]	1
▲	5	74000	(008089-)	Harness, Light, Flsh, Revl, Cab	1
▲	6	56186	(008089-)	Relay 12Vdc 40A Spdt	1
▲	7	55248	(008089-)	Cabletie Mount, Adhesive	2
▲	8	49266	(008089-)	Tie, Cable 1.75D Max 7.50Lg	2
▲	9	10632- 4	(008089-)	Grommet	1
▲	10	09244	(008089-)	Screw, Hex, M5 X 0.80 X 16, 8.8	2
▲	11	19066	(008089-)	Washer, Flat, 0.25b 0.56d .05, Pl, 10	2
▲	12	06549	(008089-)	Nut, Hex, Lock, M5 X 0.80, Nl	2
▲	13	06943	(008089-)	Screw, Hex, M6 X 1.00 X 20, 8.8	3
▲	14	32982	(008089-)	Washer, Lock, Int, 0.25	3

Fig. 11 - Light Kit, Strobe, Low (004000-008088)

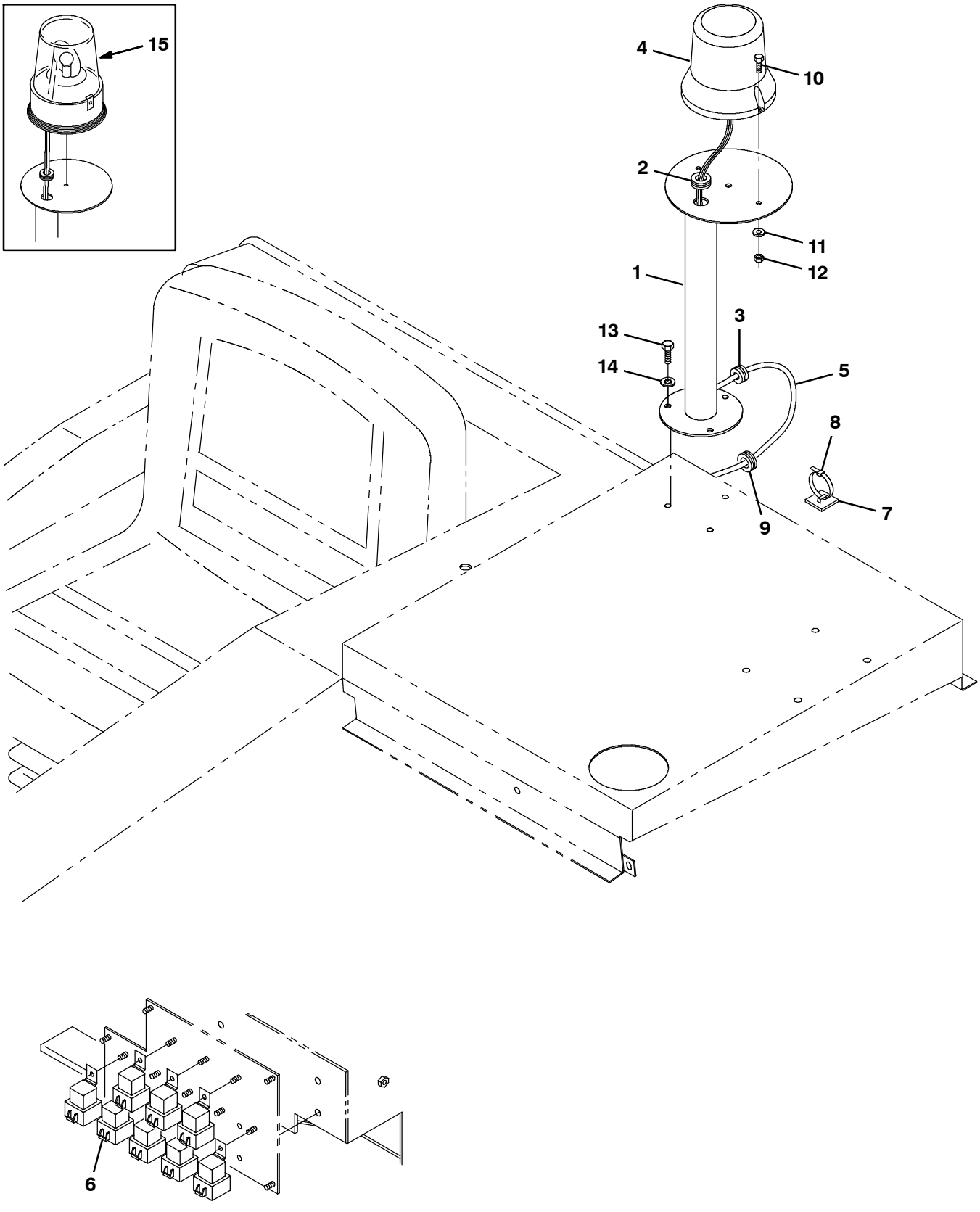

Fig. 11 - Light Kit, Strobe, Low (004000-008088)

	Ref.	Part No.	Serial Number	Description	Qty.
▽		380644	(004000-008088)	Kit, Light, Strobe, Low	1
▲	1	31954	(004000-008088)	Pedestal Wldt, Light	1
▲	2	10632-9	(004000-008088)	Grommet, Rbr, 0.56 Id For .13mat	1
▲	3	10632-12	(004000-008088)	Grommet, Rbr, 0.38 Id For .12mat	1
▲	4	1075283	(007677-008088)	Light, Strobe, Amb, 12-48vdc [Led]	1
▲	5	380691	(004000-008088)	Harness, Alarm, Backup	1
▲	6	56186	(004000-008088)	Relay 12Vdc 40A Spdt	1
▲	7	55248	(004000-008088)	Cabletie Mount, Adhesive	2
▲	8	49266	(004000-008088)	Tie, Cable 1.75D Max 7.50Lg	2
▲	9	10632-4	(004000-008088)	Grommet	1
▲	10	09244	(007677-008088)	Screw, Hex, M5 X 0.80 X 16, 8.8	2
▲	11	19066	(007677-008088)	Washer, Flat, 0.25b 0.56d .05, Pl, 10	2
▲	12	06549	(007677-008088)	Nut, Hex, Lock, M5 X 0.80, Nl	2
▲	13	06943	(004000-008088)	Screw, Hex, M6 X 1.00 X 20, 8.8	3
▲	14	32982	(004000-008088)	Washer, Lock, Int, 0.25	3
▽	15	82200	(004000-007676)	Light, Strobe Amber 12v-re	1
▲		44681-1	(004000-007676)	Lens, Strobe Light, Amber	1
▲		45779	(004000-007676)	Bulb	1
		44681	(004000-007676)	Lens, Strobe Light, Red	1
		44681-2	(004000-007676)	Lens, Strobe Light, Blue	1

Fig. 12 - Light Kit, Strobe, Low (008089-)

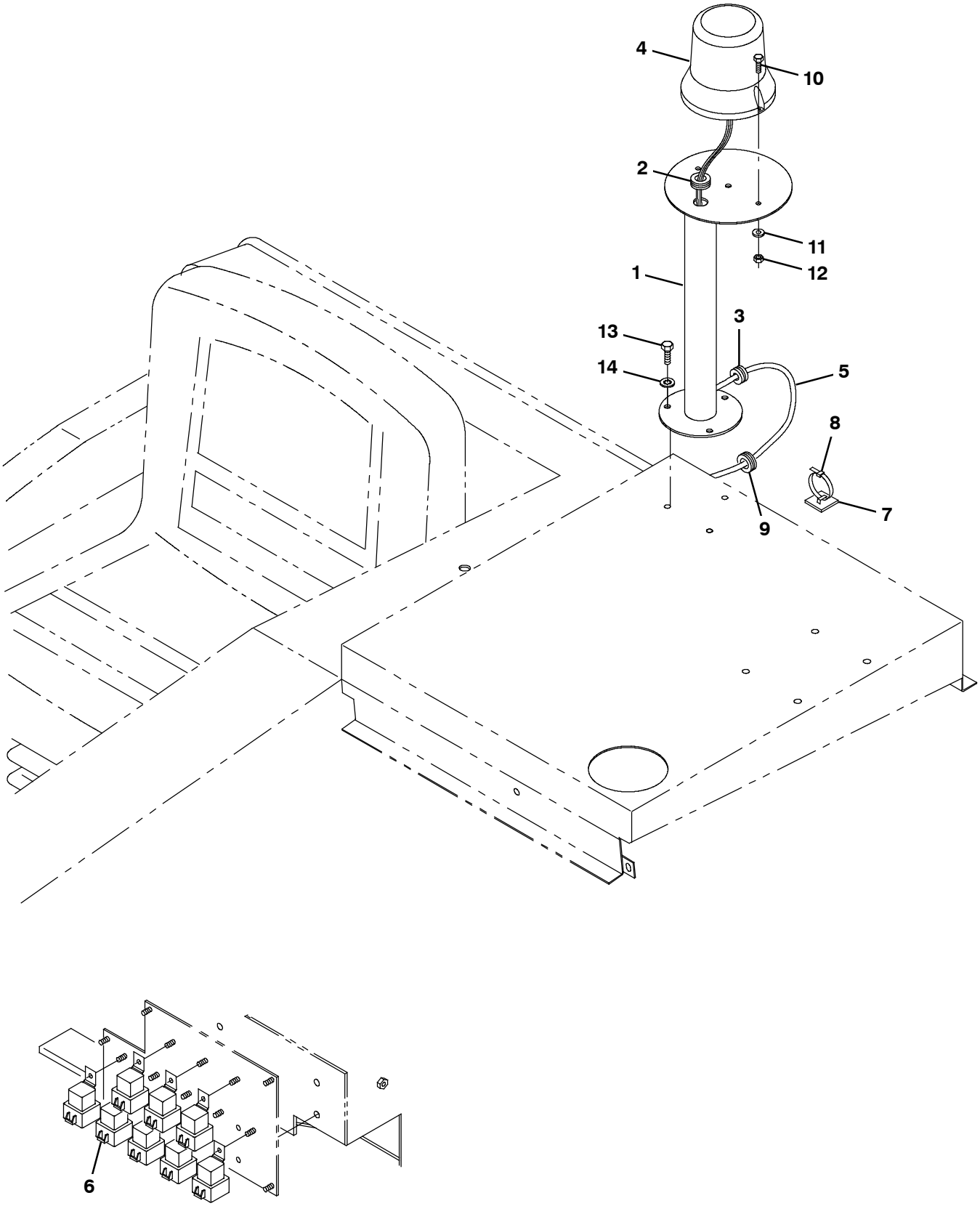

351133/351135 - ALL

Fig. 12 - Light Kit, Strobe, Low (008089-)

	Ref.	Part No.	Serial Number	Description	Qty.
▽		9012854	(008089-)	Light Kit, Strobe, Ped, Ci [800l Gray]	1
▲	1	1073876	(008089-)	Pedestal Wldt, Light [800 Gray]	1
▲	2	10632- 9	(008089-)	Grommet, Rbr, 0.56 Id For .13mat	1
▲	3	10632- 12	(008089-)	Grommet, Rbr, 0.38 Id For .12mat	1
▲	4	1075283	(008089-)	Light, Strobe, Amb, 12- 48vdc [Led]	1
▲	5	74000	(008089-)	Harness, Light, Flsh, Revl, Cab	1
▲	6	56186	(008089-)	Relay 12Vdc 40A Spdt	1
▲	7	55248	(008089-)	Cabletie Mount, Adhesive	2
▲	8	49266	(008089-)	Tie, Cable 1.75D Max 7.50Lg	2
▲	9	10632- 4	(008089-)	Grommet	1
▲	10	09244	(008089-)	Screw, Hex, M5 X 0.80 X 16, 8.8	2
▲	11	19066	(008089-)	Washer, Flat, 0.25b 0.56d .05, Pl, 10	2
▲	12	06549	(008089-)	Nut, Hex, Lock, M5 X 0.80, Nl	2
▲	13	06943	(008089-)	Screw, Hex, M6 X 1.00 X 20, 8.8	3
▲	14	32982	(008089-)	Washer, Lock, Int, 0.25	3

Fig. 13 - Back-Up Alarm Kit (004000-008088)

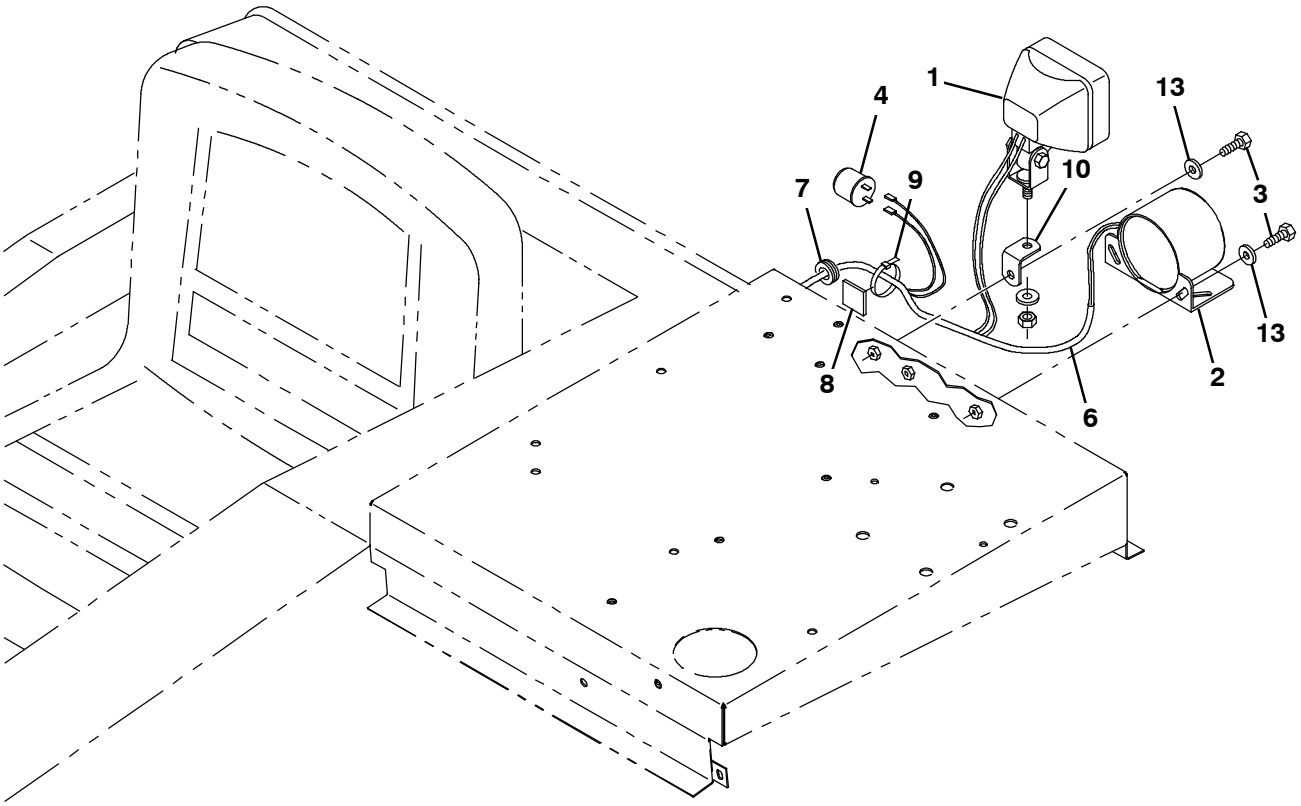

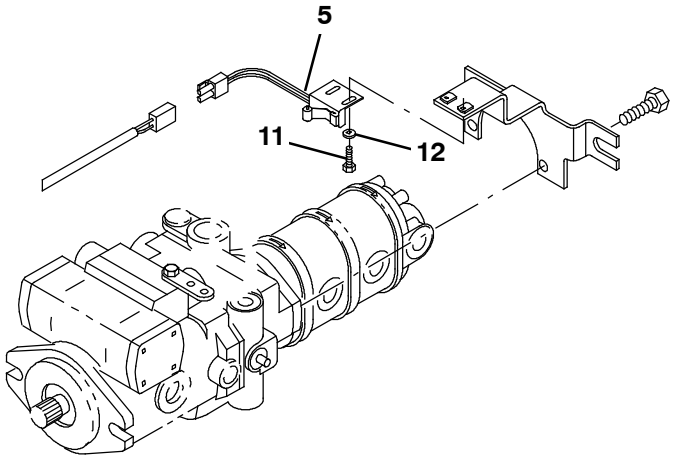

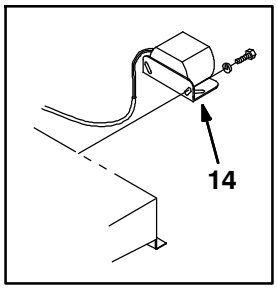

351137 - G/LP

Fig. 13 - Back- Up Alarm Kit (004000- 008088)

	Ref.	Part No.	Serial Number	Description	Qty.
▽		380640	(004000- 008088)	Kit, Alarm, Backup	1
▲▽	1	382978	(004000- 008088)	Light, Spot 12V, 32cp	1
▲▲		393770	(004000- 008088)	Lamp, 12VDC 55w	1
▲	2	9007131	(007519- 008088)	Alarm Assy, Backup, 12/48vdc	1
▲	3	06943	(004000- 008088)	Screw, Hex, M6 X 1.00 X 20, 8.8	3
▲	4	24576	(004000- 008088)	Flasher, 12v	1
▲	5	59965	(004000- 008088)	Switch Assy, Roller- no	1
▲	6	380691	(004000- 008088)	Harness, Alarm, Back- up	1
▲	7	10632- 4	(004000- 008088)	Grommet	1
▲	8	55248	(004000- 008088)	Mount, Tie	2
▲	9	49266	(004000- 008088)	Tie, Cable	2
▲	10	76385	(004000- 008088)	Bracket	1
▲	11	09206	(004000- 008088)	Screw, Hex, M4 X 0.70 X 12, 8.8	2
▲	12	19065	(004000- 008088)	Washer, Flat, 08	2
▲	13	32483	(004000- 008088)	Washer, Flat, 0.25, Sae	3
	14	61923	(004000- 007518)	Horn, Back- up Alarm	1

Fig. 14 - Back-Up Alarm Kit (008089-)

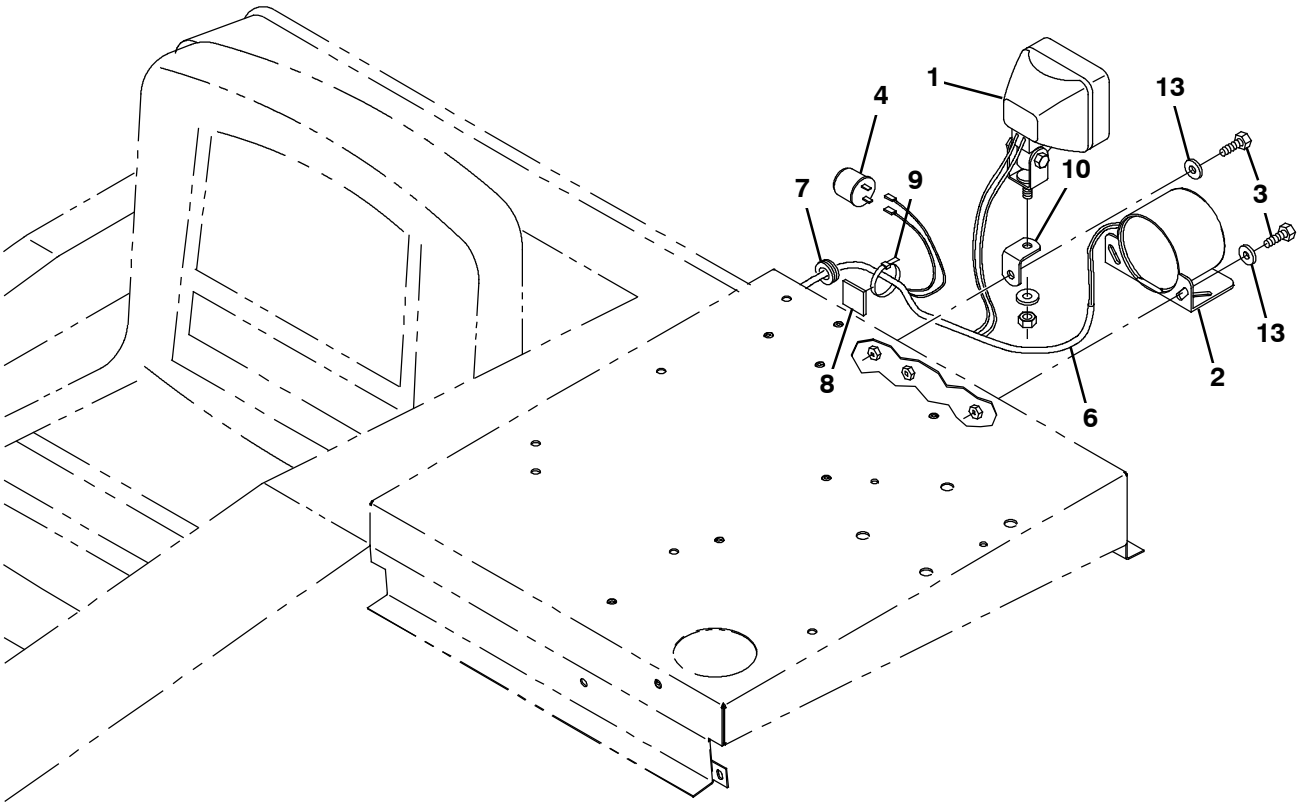

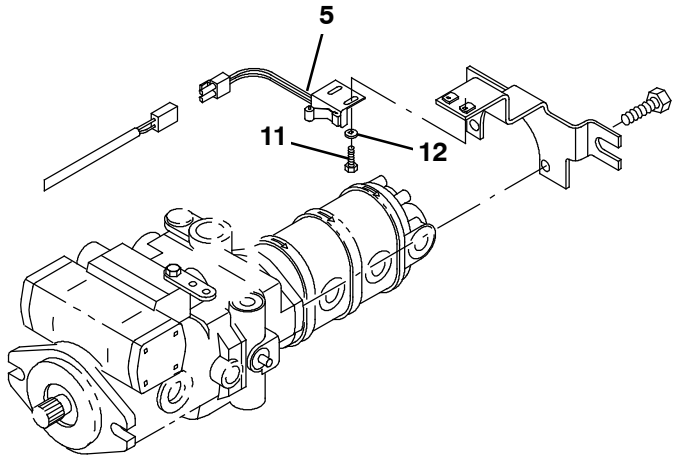

351137 - G/LP

Fig. 13 - Back- Up Alarm Kit (008089-)

	Ref.	Part No.	Serial Number	Description	Qty.
▽		9012890	(008089-)	Alarm Kit, Backup / A/V, Ci [800gray]	1
▲▽	1	382978	(008089-)	Light, Spot 12V, 32cp	1
▲▲		393770	(008089-)	Lamp, 12VDC 55w	1
▲	2	9007131	(008089-)	Alarm Assy, Backup, 12/48vdc	1
▲	3	06943	(008089-)	Screw, Hex, M6 X 1.00 X 20, 8.8	3
▲	4	24576	(008089-)	Flasher, 12v	1
▲	5	59965	(008089-)	Switch Assy, Roller- no	1
▲	6	380691	(008089-)	Harness, Alarm, Back- up	1
▲	7	10632- 4	(008089-)	Grommet	1
▲	8	55248	(008089-)	Mount, Tie	2
▲	9	49266	(008089-)	Tie, Cable	2
▲	10	1073927	(008089-)	Bracket, Angle [Gray]	1
▲	11	09206	(008089-)	Screw, Hex, M4 X 0.70 X 12, 8.8	2
▲	12	19065	(008089-)	Washer, Flat, 08	2
▲	13	32483	(008089-)	Washer, Flat, 0.25, Sae	3

Fig. 15 - Turn Signal Kit

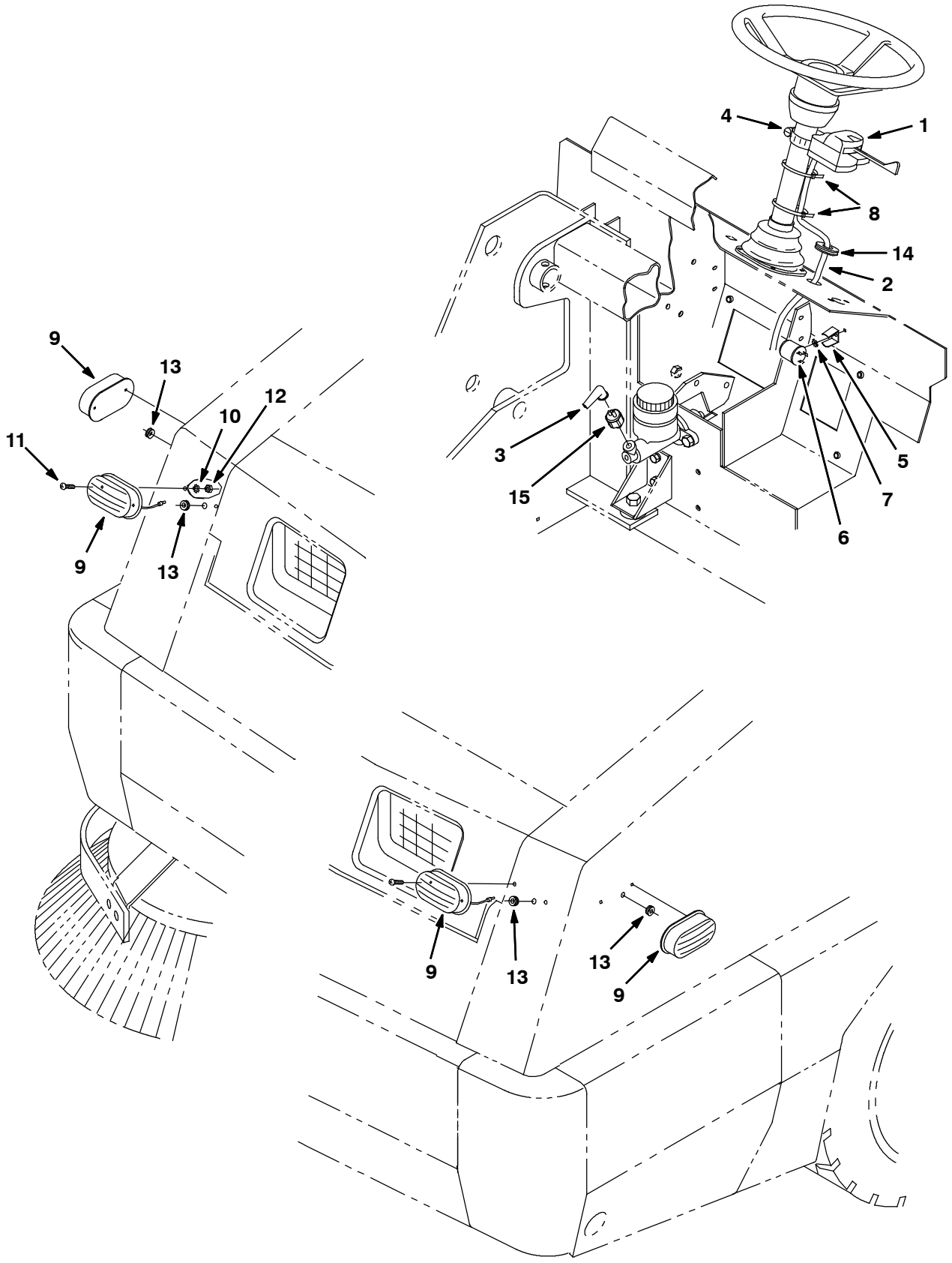

353840 - ALL

Fig. 15 - Turn Signal Kit

	Ref.	Part No.	Serial Number		Description	Qty.
▽		380712	(004000-	)	Kit, Signal, Turn	1
▲	1	60751	(004000-	)	Signal Turn	1
▲	2	76423	(004000-	)	Harness, Directional	1
▲	3	61365	(004000-	)	Boot, 90deg .44id 0.62id 1.69l, Blk	1
▲	4	11531	(004000-	)	Clamp- Wormdrive, 0.81- 1.50D	1
▲	5	24576- 1	(004000-	)	Bracket, Flasher	1
▲	6	31922	(004000-	)	Flasher Heavy Duty	1
▲	7	41139	(004000-	)	Washer- Loc Int- Ext 10 Pltd	1
▲	8	49266	(004000-	)	Tie, Cable	4
▲▽	9	34848	(004000-	)	Light Assy Mark/Yel 12V- . A	4
▲▲		87948	(004000-	)	Bulb, #194	1
▲	10	41140	(004000-	)	Washer- Loc Int- Ext .25 Pltd	8
▲	11	06927	(004000-	)	Screw, Pan, M04	8
▲	12	02850	(004000-	)	Nut, Hex, Lock	8
▲	13	10632- 5	(004000-	)	Grommet Rbr 0.25Id For .09Matl	5
▲	14	10632- 8	(004000-	)	Grommet,Rbr,0.75Id,For .13Matl	1
▲	15	13959	(004000-	)	Switch	1

Fig. 16 - Overhead Guard Kit (004000-008088)

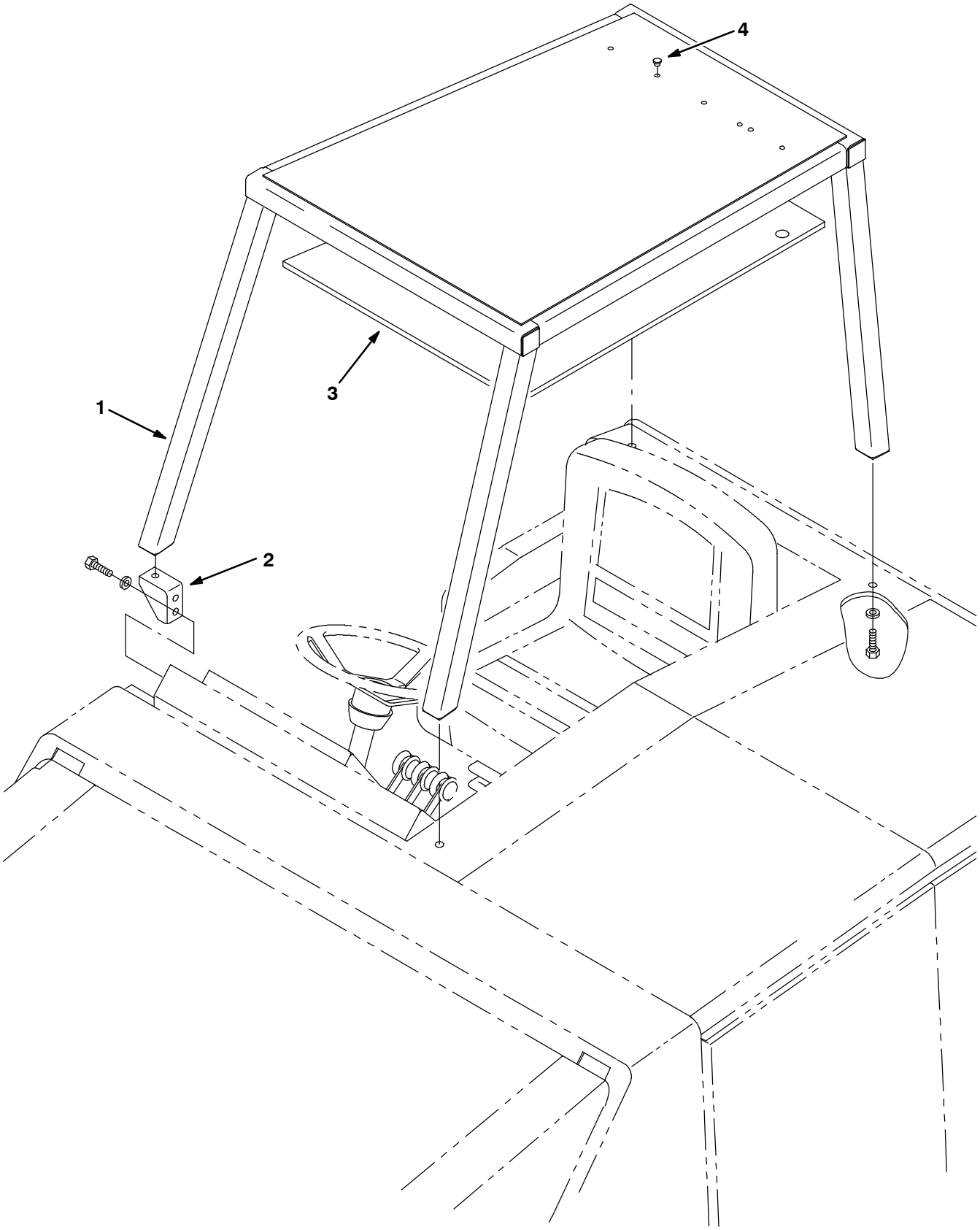

07652 - ALL

Fig. 16 - Overhead Guard Kit (004000- 008088)

	Ref.	Part No.	Serial Number	Description	Qty.
▽		70669	(004000- 008088)	Guard Kit, Overhead	1
▲	1	65258	(004000- 008088)	Guard Wldt, Overhead	1
▲	2	70454	(004000- 008088)	Bracket, Mtg, Ohg	1
▲	3	74007	(004000- 008088)	Foam, Insulation	1
▲	4	33806	(004000- 008088)	Plugbutton	6

Fig. 17 - Overhead Guard Kit (008089-)

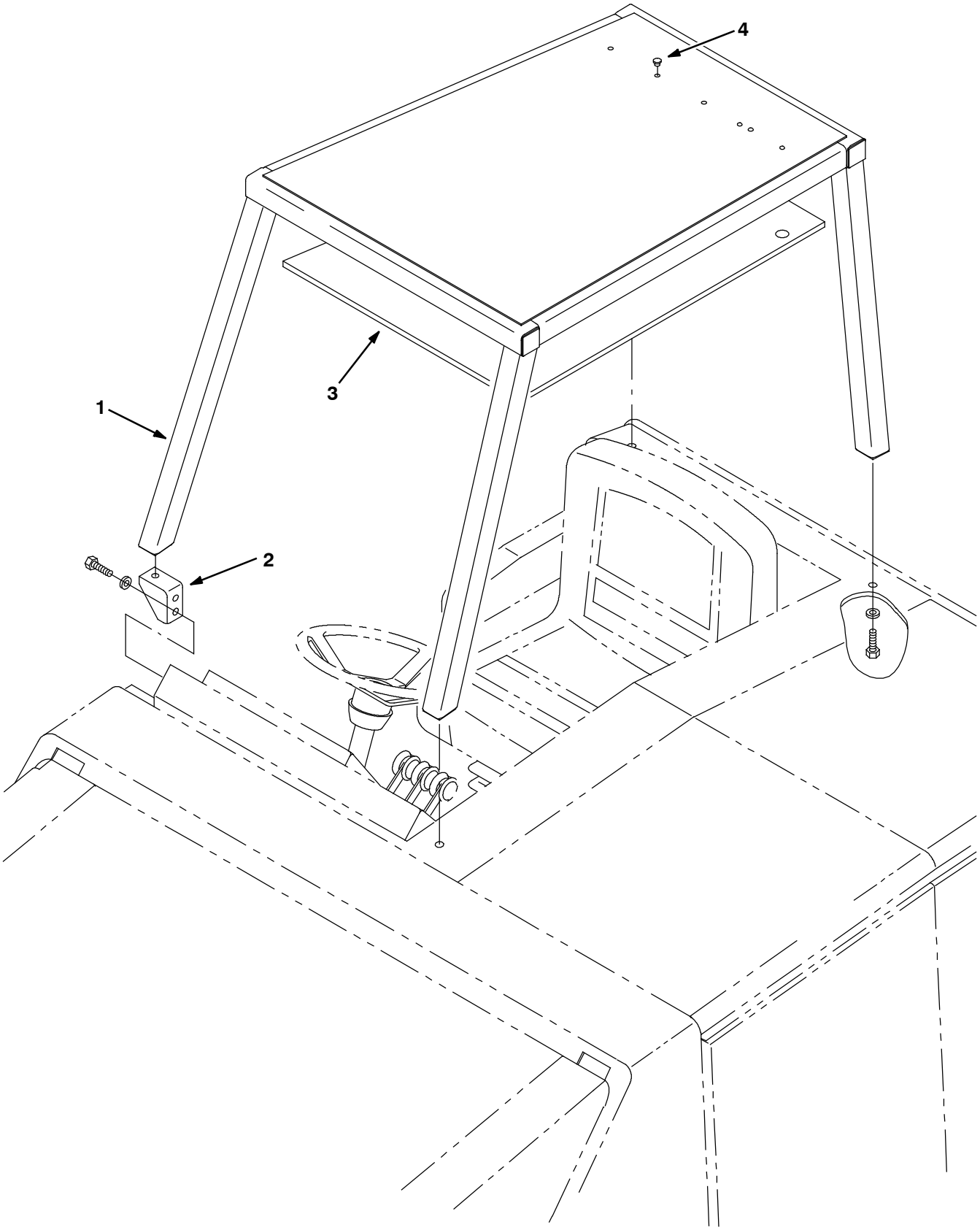

07652 - ALL

Fig. 17 - Overhead Guard Kit (008089-)

	Ref.	Part No.	Serial Number		Description	Qty.
▽		9012880	(008089-	)	Ohg Kit, Ci [800l Gray]	1
▲	1	1073869	(008089-	)	Guard Wldt, Ohg [800 Gray]	1
▲	2	1073877	(008089-	)	Bracket, Mtg, Ohg [800 Gray]	1
▲	3	74007	(008089-	)	Foam, Insulation	1
▲	4	33806	(008089-	)	Plugbutton	6

Fig. 18 - Hopper Floor Kit (004000- 008088)

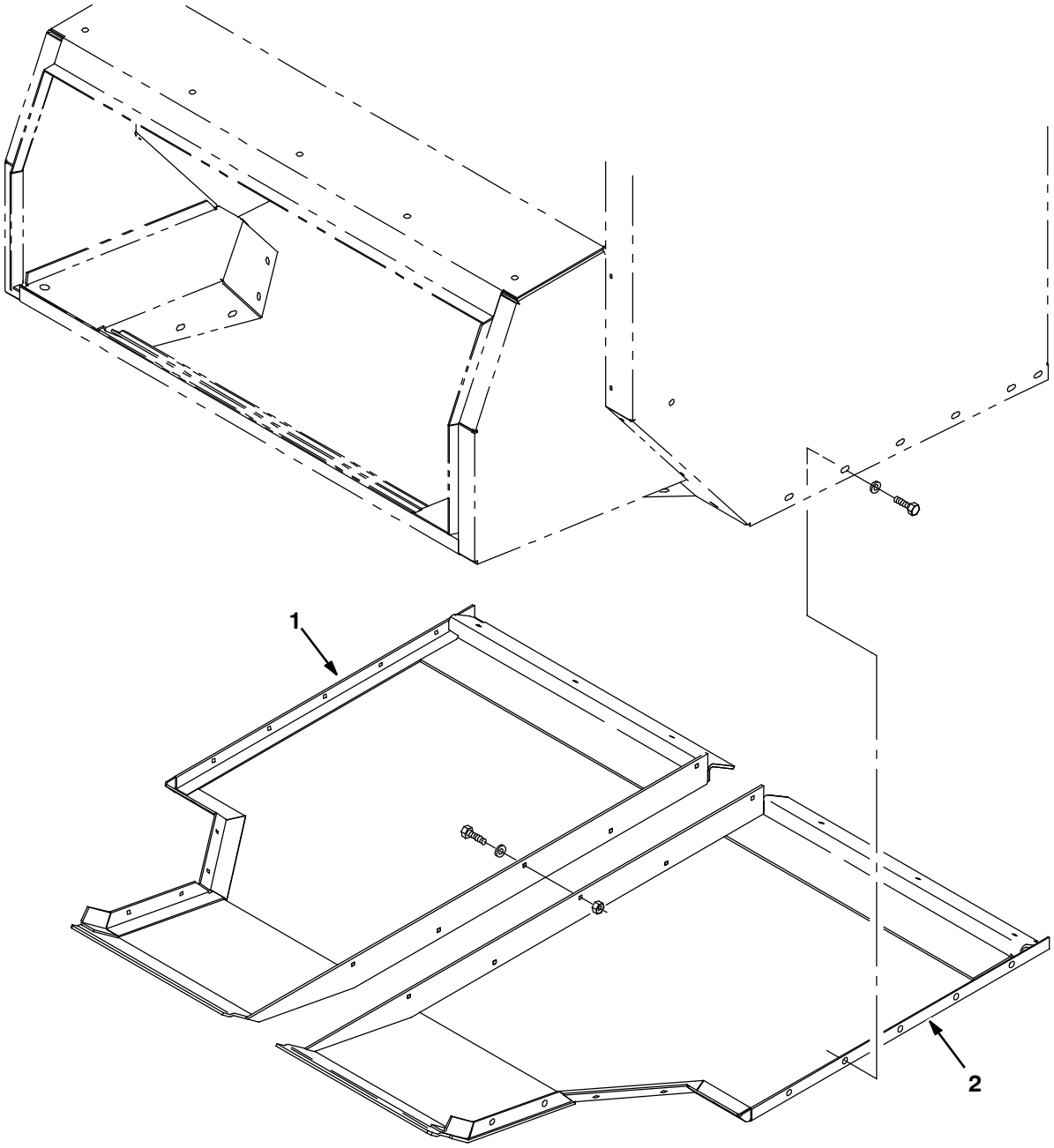

07668 - 800

	Ref.	Part No.	Serial Number	Description	Qty.
▽		70686	(004000- 008088)	Hopper Floor Kit, St Stl 800	1
▲	1	77611	(004000- 008088)	Panel Wldt, Hopper, Floor, RH	1
▲	2	77613	(004000- 008088)	Panel Wldt, Hopper, Floor, LH	1

Fig. 19 - Hopper Floor Kit (008089-)

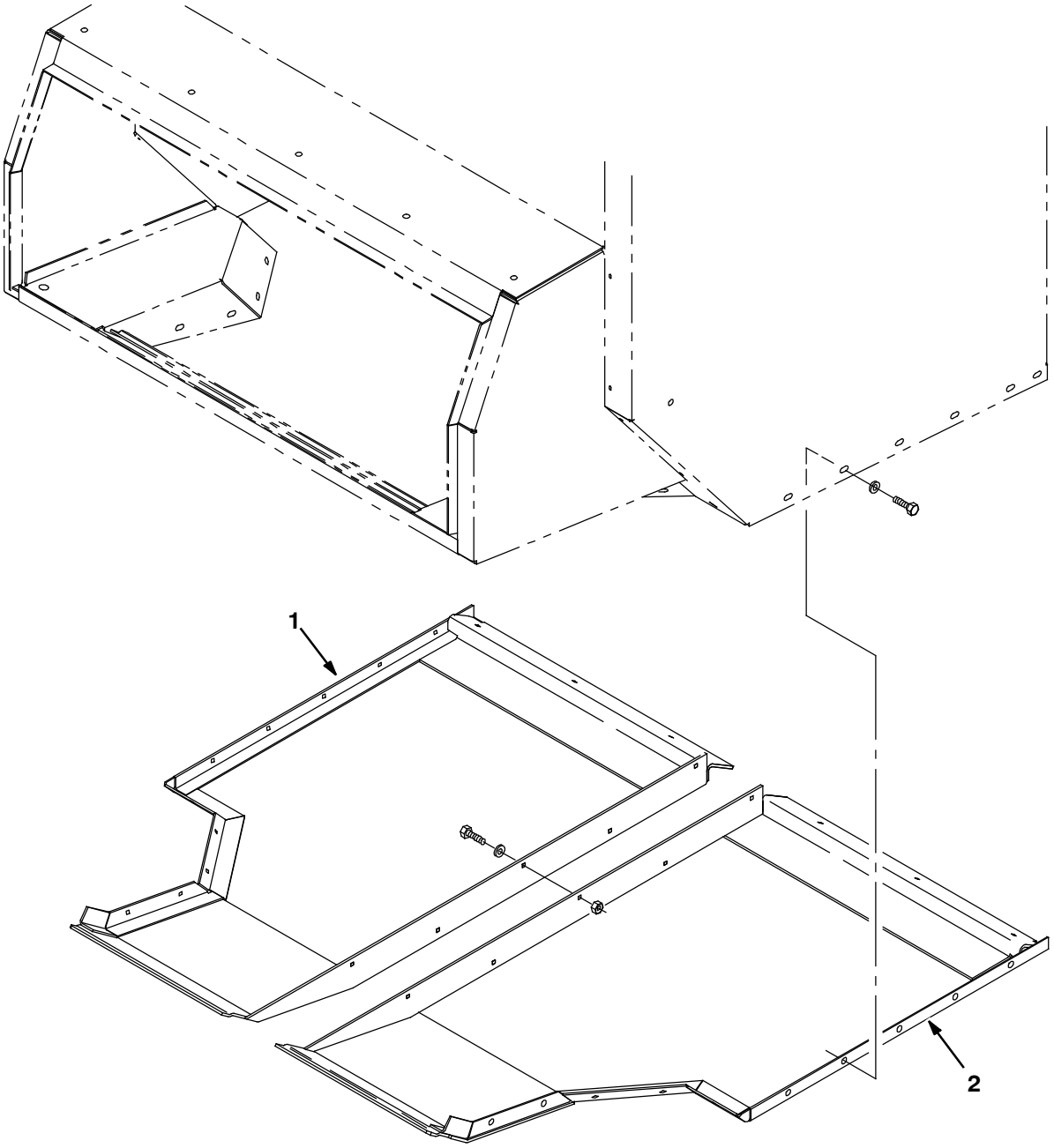

07668 - 800

	Ref.	Part No.	Serial Number		Description	Qty.
▽		9012892	(008089-	)	Floor Kit, Hppr, Ssb, Ci [800lgray]	1
▲	1	1073946	(008089-	)	Panel, Hppr, Bottom, Rh [800 B/Green Ss]	1
▲	2	1073947	(008089-	)	Panel, Hppr, Bottom, Lh [800 B/Green Ss]	1

Fig. 20 - Bumper Assembly, SE (004000-008088)

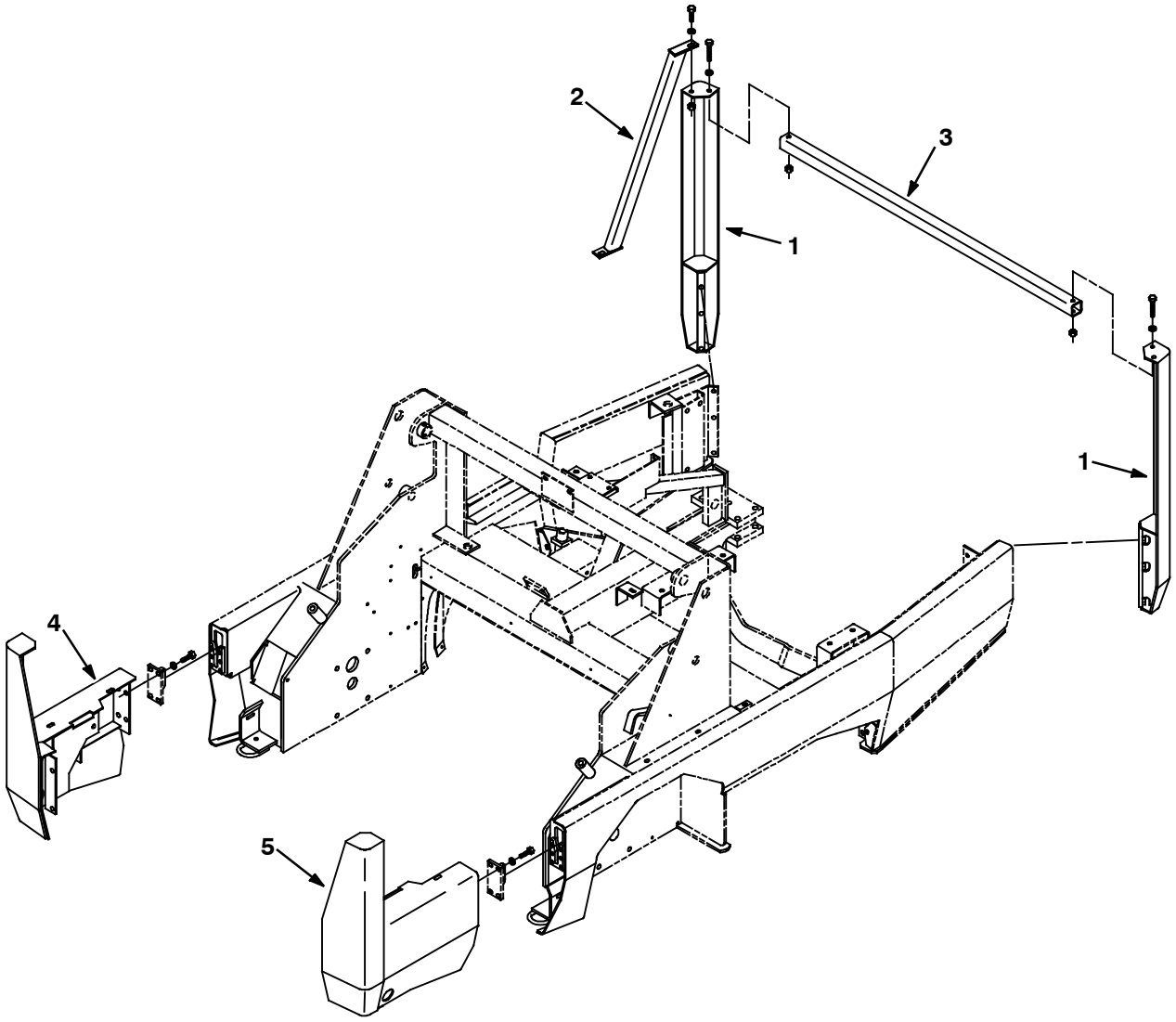

09909 - ALL

	Ref.	Part No.	Serial Number	Description	Qty.
▽		83557	(004000-008088)	Bumper Assy, Se	1
▲	1	70802	(004000-008088)	Leg Wldt, Bumper, Se	2
▲	2	70793	(004000-008088)	Brace Wldt, Bumper, Se	1
▲	3	70815	(004000-008088)	Tube, Cross, Bumper, Se	1
▲	4	83626	(004000-008088)	Bumper Wldt, Se, Rh, Front	1
▲	5	83627	(004000-008088)	Bumper Wldt,Se, Lh, Front	1

Fig. 21 - Bumper Assembly, SE (008089-)

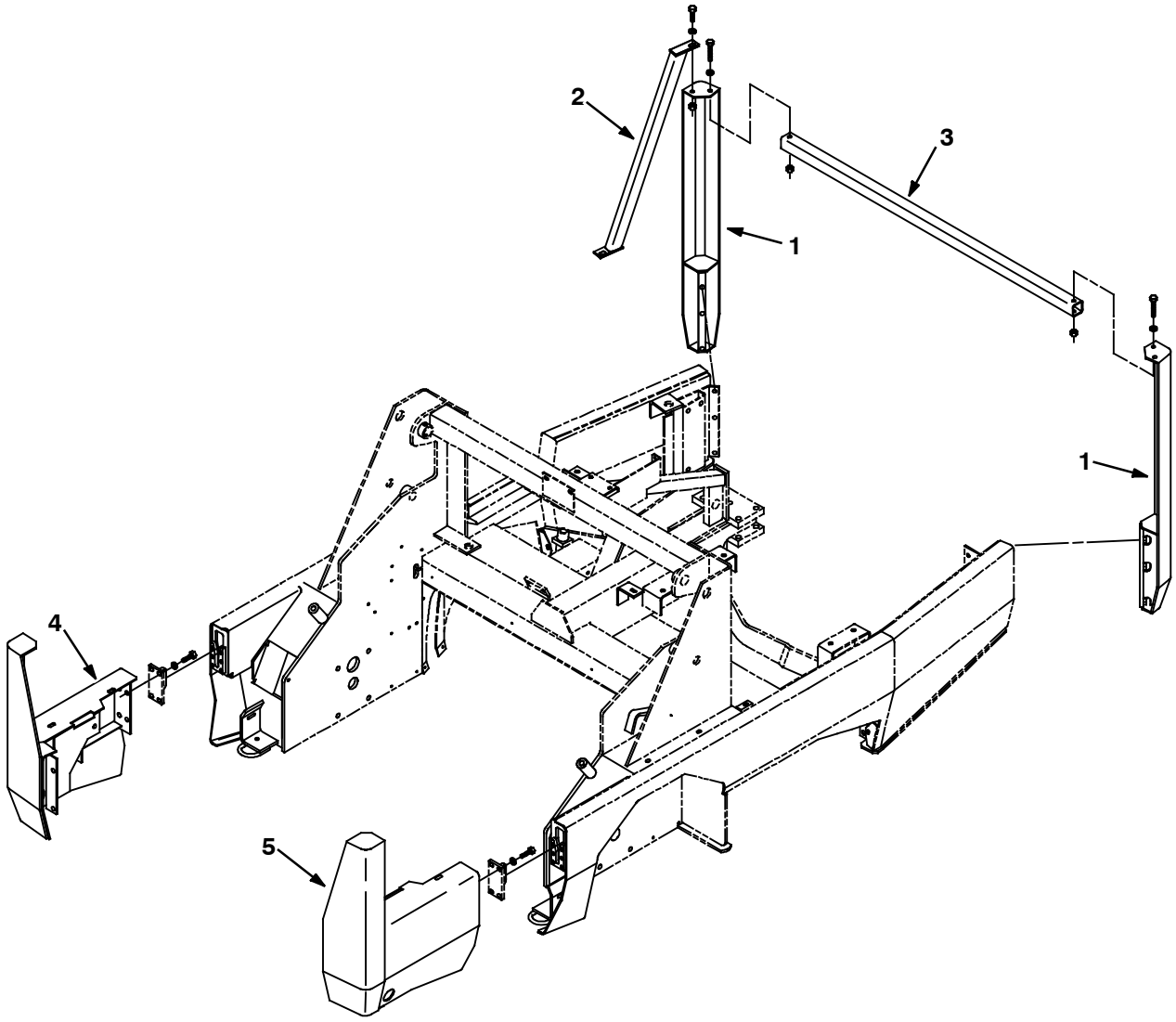

09909 - ALL

	Ref.		Serial Number		Description	Qty.
▽		9012884	(008089-	)	Bumper Kit, Se, Ci [800l Gray]	1
▲	1	1073879	(008089-	)	Leg Wldt, Bmpr, Se [800 Gray]	2
▲	2	1073878	(008089-	)	Brace Wldt, Bmpr, Se [800 Gray]	1
▲	3	1073843	(008089-	)	Bumper Wldt, Rh [800 Gray]	1
▲	4	1073929	(008089-	)	Bumper Wldt, Se, Rh, Front [Gray]	1
▲	5	1073950	(008089-	)	Bumper Wldt, Se, Lh, Front [Gray]	1

Fig. 22 - Side Brush Lift Group, L.H.

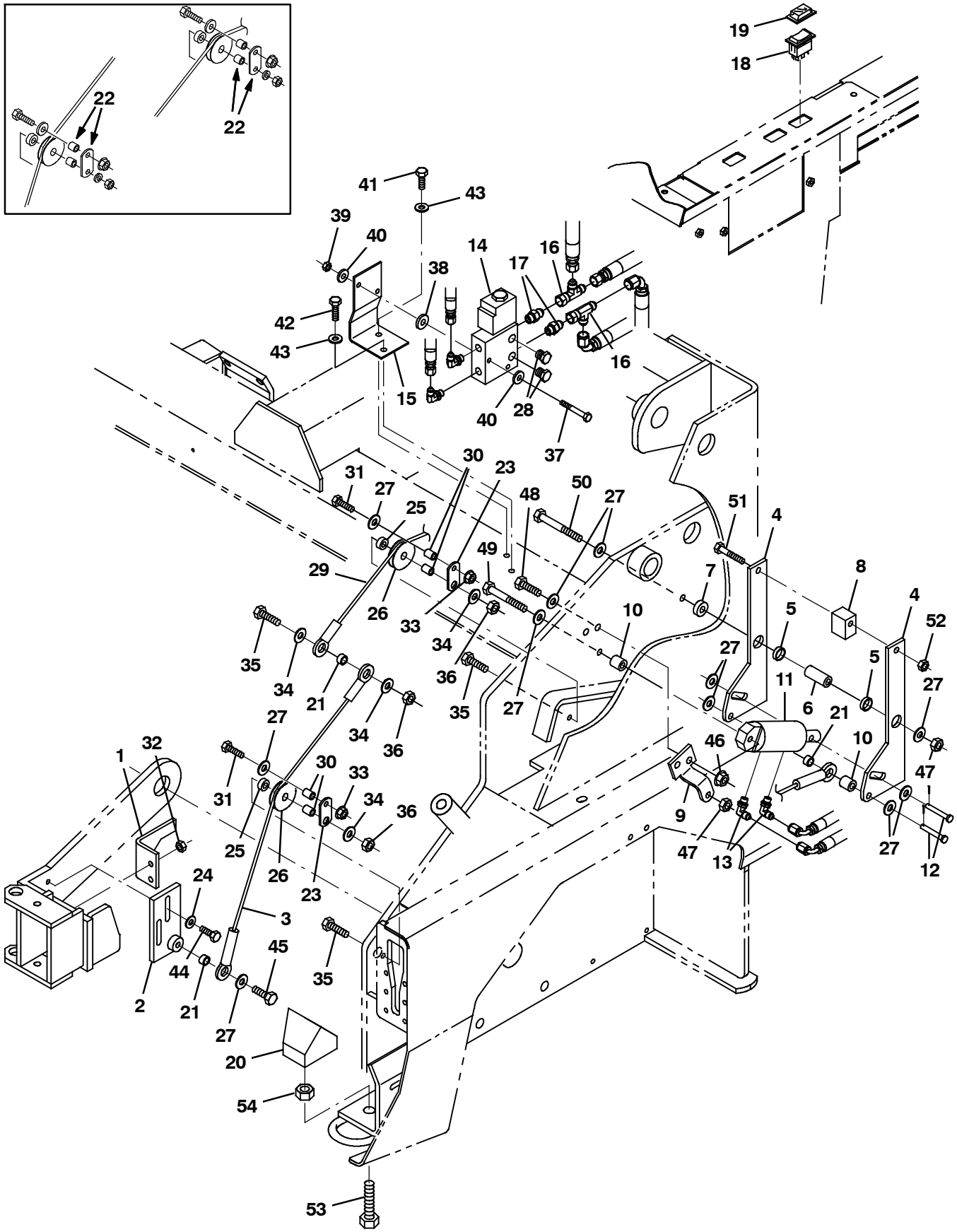

07741 - ALL

Fig. 22 - Side Brush Lift Group, L.H.

Ref.	Part No.	Serial Number	Description	Qty.
1	77458	(004000-)	Bracket, Angle	1
2	77569	(004000-)	Plate Wldt	1
3	70532	(004000-)	Cable, Glv .25d 021.2l .63eye /.63eye	1
4	77584	(004000-)	Plate	2
5	74090	(004000-)	Bearing	2
6	77597	(004000-)	Sleeve, 0.406B 0.75D1.80 Stl	1
7	77727	(004000-)	Sleeve .438B 1.00D .35Stl	1
8	77459	(004000-)	Spacer	1
9	77783	(004000-)	Plate, Angle	1
10	77600	(004000-)	Sleeve, 0.406B .750D .800Stl	2
11	1041034	(004000-)	Cylinder, Hyd, 1.5b 06.3l 01.50strk 2500	1
12	51813	(004000-)	Pin,Clevis,0.37 Dia.X 2.12 Lg	2
13	77097	(004000-)	Ftg- Hyd E90 Jm04/Om04	4
14	84016	(004000- 007338)	Valve, Hyd, Solenoid (See Breakdowns)	1
14	1049211	(007339-)	Valve, Cntrl, Hyd, Solenoid, 12vdc 06gpm (See Breakdowns)	1
15	21231	(004000-)	Bracket, Side Brush, Valve	1
16	42215	(004000-)	Fitting, Hyd, Tee, Jf06/Jm06/Jm06, Run	2
17	56690	(004000-)	Ftg- Hyd Str Jm06/Om06	2
18	65561	(004000-)	Switch Rocker Spst	1
19	57807	(004000-)	Cover, Rocker Switch Seal	1
20	77738	(004000-)	Block	1
21	65174	(004000-)	Spacer	3
22	375416	(004000- xxxxxx)	Replacement Kit, Roller, Side Brush Lift	1
23	375415	(xxxxxx-)	Plate, Side Brush, Roller	2
24	41186	(004000-)	Washer- Belleville .31 Pltd	2
25	73737	(004000-)	Sleeve, .375B .75D .32 Stl	2
26	74391	(004000-)	Pulley - Cable, 1.5 Dia	2
27	32492	(004000-)	Flat Washer, 3/8” Hard	14
28	46482	(004000-)	Ftg- Hyd Plg Om06	2
29	23936	(004000-)	Cable, Glv .25d 016.8l .64eye /.64eye	1
30	80395	(xxxxxx-)	Sleeve	4
31	76570	(xxxxxx-)	Screw, Hex m08	2
32	39311	(004000-)	Nut, Hex, Std, M8 X 1.25	1
33	07791	(xxxxxx-)	Nut, Hex, Flange	2
34	33924	(xxxxxx-)	Washer, Flat, M10, Ss	4
35	12317	(xxxxxx-)	Screw, Hex, M10 X 1.50 X 30, Ss	3
36	08714	(xxxxxx-)	Nut, Hex, Lock, M10 X 1.5, Nl, Ss	3
37	06548	(004000-)	Screw, Hex, M6 X 1.0 X 60, 8.8	2
38	63416	(004000-)	Washer, Rbr, .12 0.31b 0.88d	2
39	08708	(004000-)	Nut, Hex, Lock, M6 X 1.0, Nl	2
40	19066	(004000-)	Washer, Flat, #10	4
41	16931	(004000-)	Screw, Hex, M8 X 1.25 X 20, 8.8	1
42	76570	(004000-)	Screw, Hex, M8 X 1.25 X 30, 8.8	1
43	32491	(004000-)	Washer, Flat, 0.31 Std	2
44	09010	(004000-)	Screw, Hex, M8 X 1.25 X 25, Ss	2
45	39283	(004000-)	Screw, Hex, M10 X 1.5 X 25, 8.8	2
46	07792	(004000-)	Nut, Hex, Flng, M10 X 1.5	2
47	41430	(004000-)	Nut, Hex, Lock, M10 X 1.5, Nl	2
48	39284	(004000-)	Screw, Hex, M10 X 1.5 X 35, 8.8	2

07741 - ALL

Fig. 22 - Side Brush Lift Group, Side, L.H.

Ref.	Part No.	Serial Number	Description	Qty.
49	06965	(004000-)	Screw, Hex, M10 X 1.5 X 80, 8.8	1
50	03193	(004000-)	Screw, Hex, M10 X 1.5 X 90, 8.8	1
51	06957	(004000-)	Screw, Hex, M8 X 1.25 X 60, 8.8	1
52	08709	(004000-)	Nut, Hex, Lock, M8 X 1.25, Nl	1
53	77752	(004000-)	Screw, Hex, M16 X 2.0 X 70, 8.8, Fl	1
54	33342	(004000-)	Nut, Hex, Lock, M16 X 2.0, Nl	1

Fig. 23 - Side Brush Motor Group, L.H.

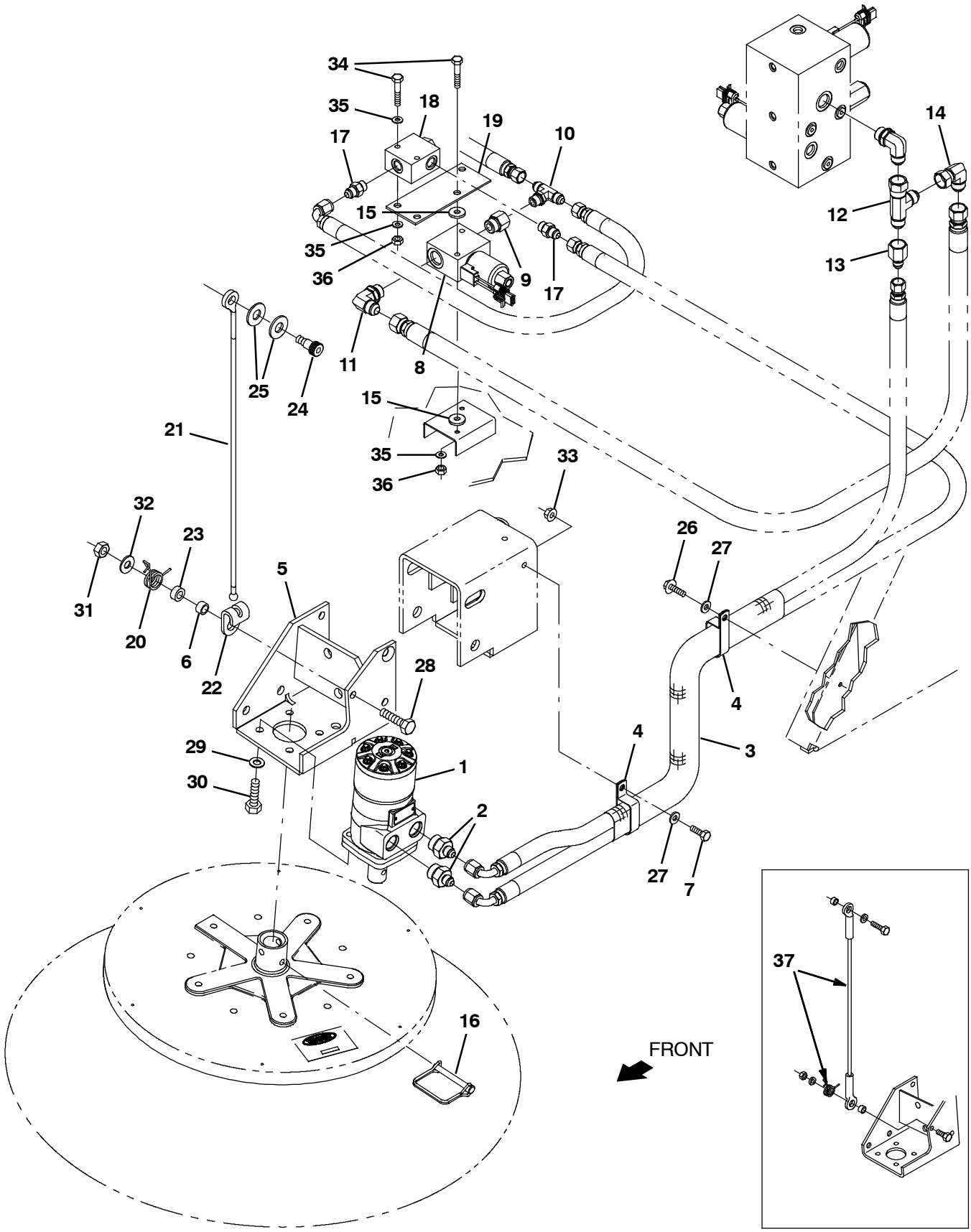

356599 - G, LP, NA

Fig. 23 - Side Brush Motor Group, L.H.

Ref.	Part No.	Serial Number	Description	Qty.
1	79781	(004000- 007797)	Motor, Hyd Gear In 17.9 B 1500 (See Breakdowns) (Replaced by 9009502)	1
1	1057338	(007798-)	Motor, Hyd, Gear, Int 17.9 Bi- Dir 2500	1
2	47508	(004000-)	Ftg- Hyd StrJm06/Om10	2
3	76461	(004000-)	Sleeve, Nylon #27 55.Ol	1
4	67366	(004000-)	Clamp, Cable, Stl, 1.0x2.0x0.62w, 1hole	2
5	75142	(004000- 008088)	Bracket, Mounting, Motor	1
5	1073921	(008089-)	Bracket Wldt, Mtg, Motor [Gray]	1
6	65174	(004000-)	Tube, 0.44id 0.62od 00.4l, Stl	
7	06944	(004000-)	Screw, Hex, M6 X 1.0 X 25, 8.8	1
8	84015	(004000- 007338)	Valve- Hyd, Solenoid (See Breakdowns)	1
8	1049210	(007339-)	Valve, Cntrl, Hyd, Solenoid, 12vdc 12gpm (See Breakdowns)	1
9	47637	(004000-)	Ftg- Hyd Str Om08/Of06	1
10	67683	(004000-)	Ftg- Hyd Tee Jm06Omjm	1
11	44868	(004000-)	Ftg- Hyd E90 Jm08/Om08	1
12	45482	(004000-)	Ftg- Hyd Tee Jm08Jmjf	1
13	47753	(004000-)	Ftg- Hyd Str Jm06/Jf08	1
14	17980	(004000-)	Ftg- Hyd E90 Jm08/Jf08	1
15	63416	(004000-)	Washer, .310B .88D .12Rbr	4
16	84581	(004000-)	Pin Assy, .312X3.0 W/Lanyard	1
17	56690	(004000-)	Ftg- Hyd Str Jm06/Om06	2
18	79621	(004000-)	Check Valve, 100 Psi	1
19	79622	(004000- 008088)	Plate, Mtg, Check Valve	1
19	1073928	(008089-)	Plate, Mtg, Check Valve [Gray]	1
20	375403	(004000-)	Spring, Torsion	1
21	375401	(xxxxxx-)	Cable	1
22	1017898	(xxxxxx-)	Hook, Cable, .44d Ball	1
23	375404	(xxxxxx-)	Spacer	1
24	36758	(xxxxxx-)	Bolt, Shld, .50d X 0.50, .38- 16	1
25	32486	(xxxxxx-)	Washer, Flat	2
26	12459	(004000-)	Screw, Hex, M6 X 1.0 X 20, Fmg	1
27	41185	(004000-)	Washer, Belleville, .25	2
28	39284	(004000-)	Screw, Hex, M10 X 1.5 X 35, 8.8	1
29	32485	(004000-)	Washer, Flat, 0.38 Sae	4
30	34195	(004000-)	Screw, Hex, .38- 16 X 1.00, Nl	4
31	41430	(004000-)	Nut, Hex, Lock, M10 X 1.5, Nl	1
32	32492	(004000-)	Washer, Flat, 0.38 Std	1
33	07790	(004000-)	Nut, Hex, Flng, M6 X 1.00	1
34	06548	(004000-)	Screw, Hex, M6 X 1.00 X 60, 8.8	4
35	32490	(004000-)	Washer, Flat, 0.25, Std	6
36	08708	(004000-)	Nut, Hex, Lock, M6 X 1.00, Nl	4
37	375417	(004000- xxxxxx)	Cable Kit, Brush, Side, Lh, Ci [800l]	1

Fig. 24 - Side Brush Pivot Group, L.H.

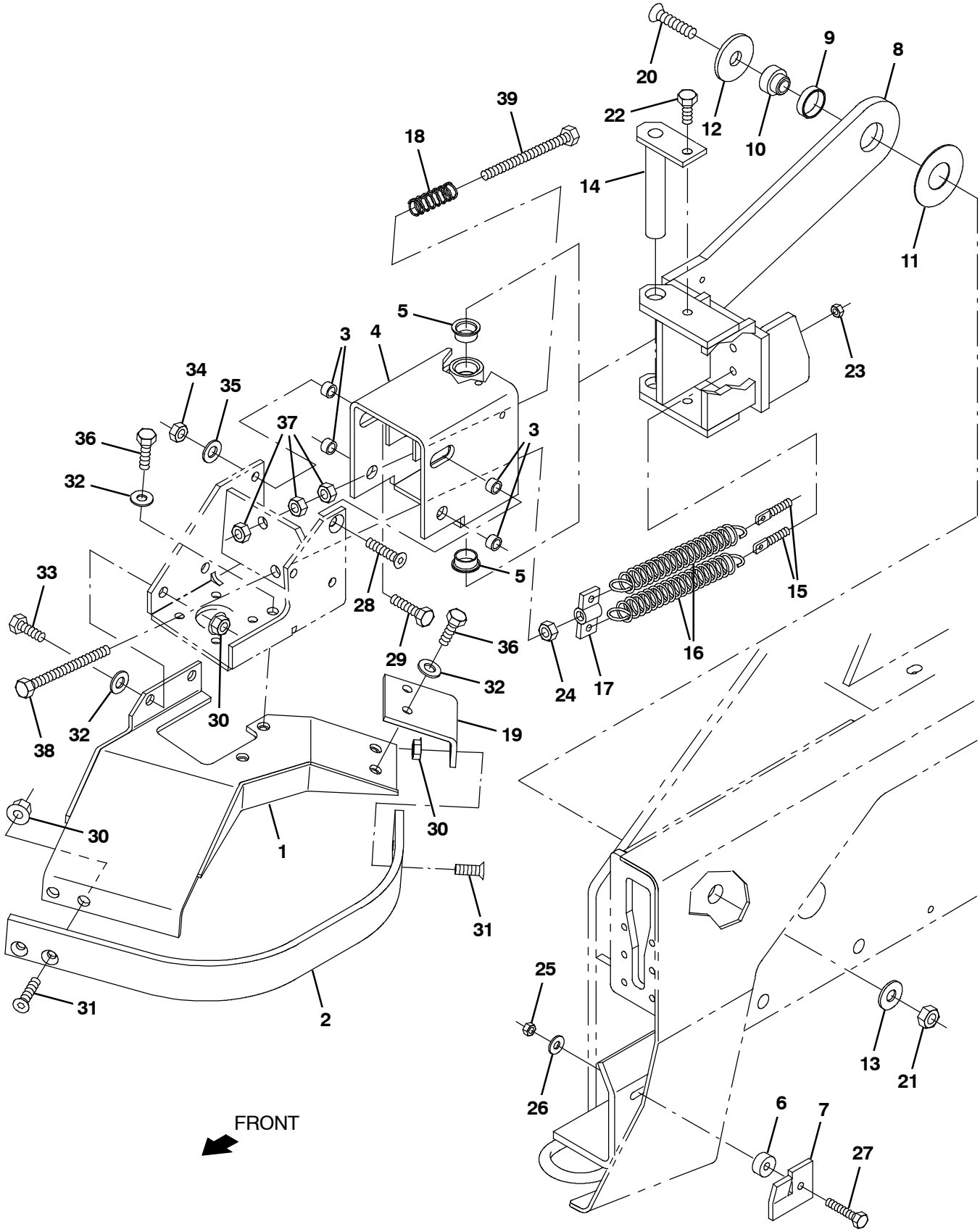

356600 - G, LP, NA

Fig. 24 - Side Brush Pivot Group, L.H.

Ref.	Part No.	Serial Number	Description	Qty.
1	21250	(004000- 008088)	Guard Wldt, Sidebrush	1
1	1073938	(008089-)	Guard Wldt, Brush, Side [800 Gray]	1
2	21252	(004000- 008088)	Guard, Side Brush	1
2	1073889	(008089-)	Guard, Side, Brush [800 Gray]	1
3	65174	(004000-)	Tube, 0.44id 0.62od 00.4l, Stl	4
4	75099	(004000- 008088)	Bracket Wldt, Pivot	1
4	1073912	(008089-)	Bracket Wldt, Pivot [Gray]	1
5	04761	(004000-)	Bearing, Flange .875 Bore	2
6	74059	(004000-)	Spacer	1
7	75899	(004000- 008088)	Bracket, Angle	1
7	1074295	(008089-)	Bracket, Channel, Mtg [800 Gray]	1
8	75117	(004000- 008088)	Bracket Wldt, Lift	1
8	1073913	(008089-)	Bracket Wldt, Lift [Gray]	1
9	70627	(004000-)	Bearing	1
10	70526	(004000-)	Shaft, Pivot	1
11	70524	(004000-)	Washer, Flat, 1.30b 3.00d .06, Stl	1
12	70525	(004000-)	Washer, Flat, 0.71b 2.25d .19, Stl, Csk	1
13	36328	(004000-)	Washer, Flat, Belleville, .50	1
14	70431	(004000-)	Pin	1
15	70626	(004000-)	Bolt- Eye M8- 1.25	2
16	65160	(004000-)	Spring, Extension	2
17	65173	(004000- 008088)	Bracket, Spring	1
17	1074290	(008089-)	Bracket, Spring [Gray]	1
18	65180	(004000-)	Spring, Comp	1
19	21251	(004000- 008088)	Plate, Angle	1
19	1074294	(008089-)	Bracket, Angle, Mtg, Guard, Side Brush	1
20	20192	(004000-)	Screw, Flt, Soc, .50- 13 X 2.00, Al	1
21	32985	(004000-)	Nut, Hex, Lock, .50- 13, Nl	1
22	09291	(004000-)	Screw, Hex, M10 X 1.5 X 20, Ss	1
23	39311	(004000-)	Nut, Hex, Std, M8 X 1.25	2
24	39312	(004000-)	Nut, Hex, Std, M10 X 1.5	1
25	08709	(004000-)	Nut, Hex, Lock, M8 X 1.25, Nl	1
26	32491	(004000-)	Washer, Flat, 0.31, Std	1
27	41342	(004000-)	Screw, Hex, M8 X 1.25 X 40, 8.8	1
28	06535	(004000-)	Screw, Flt, M10 X 1.5 X 35, 10.9	1
29	39284	(004000-)	Screw, Hex, M10 X 1.5 X 35, 8.8	2
30	07792	(004000-)	Nut, Hex, Flng, M10 X 1.5	6
31	09081	(004000-)	Screw, Flt, M10 X 1.5 X 25, 10.9	4
32	32485	(004000-)	Washer, Flat, 0.38 Sae	5
33	39283	(004000-)	Screw, Hex, M10 X 1.5 X 25, 8.8	2
34	41430	(004000-)	Nut, Hex, Lock, M10 X 1.5, Nl	4
35	32492	(004000-)	Washer, Flat, 0.38 Std	7
36	09770	(004000-)	Screw, Hex, M10 X 1.5 X 25, Ss, Nl	2
37	07787	(004000-)	Nut, Hex, Std, M10 X 1.5, Ss	3
38	76438	(004000-)	Screw, Hex, M10 X 1.5 X 90, 8.8, Fl	1
39	06537	(004000-)	Screw, Hex, M10 X 1.50 X 120, 8.8, Fl	1

Fig. 25 - Side Brush Wire Harness Group, L.H.

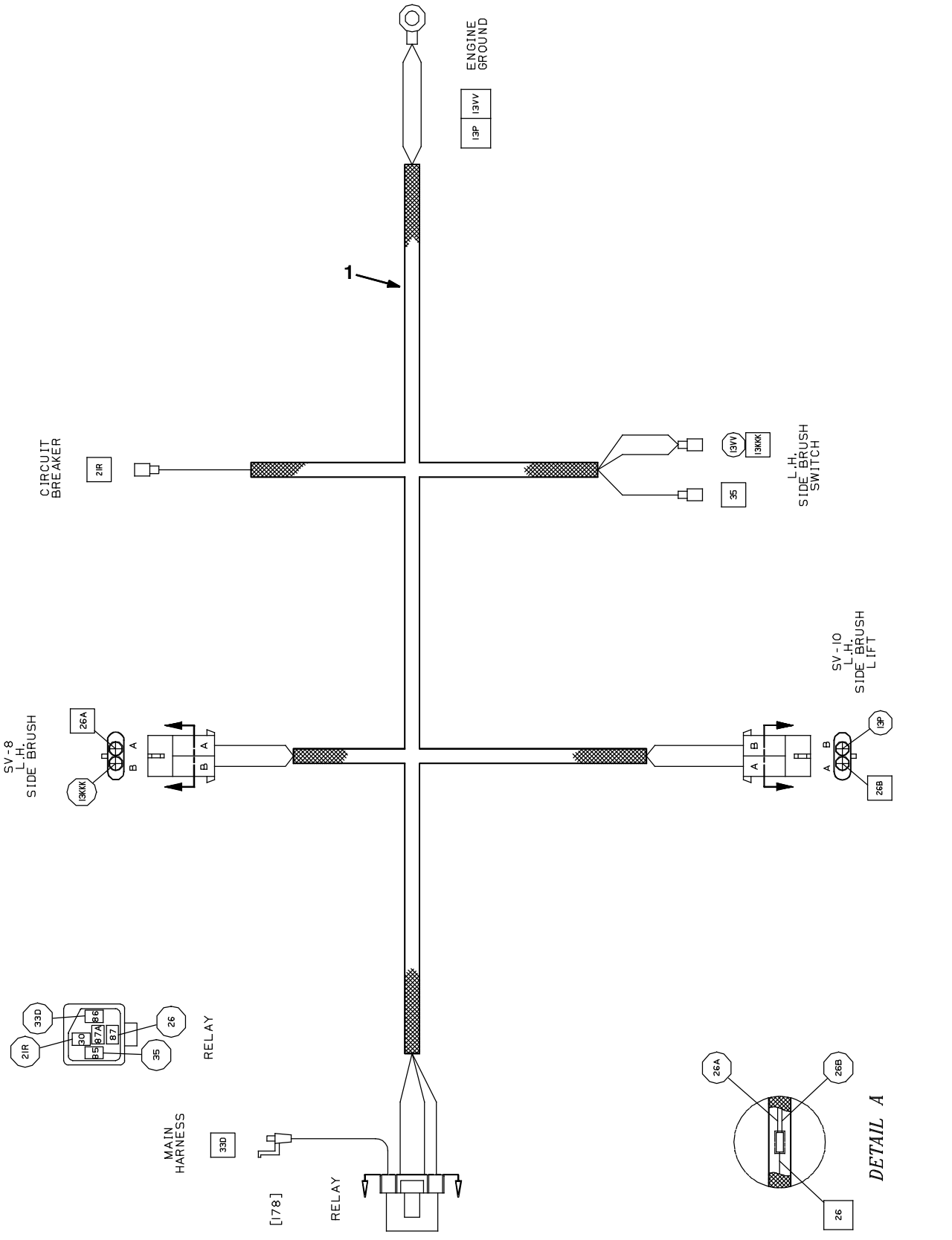

10501 - ALL

Ref.	Part No.	Serial Number	Description	Qty.
1	83699	(004000-)	Harness, Side Brush, L.H.	1

Fig. 26 - Side Brush Hydraulic Hose Group, L.H.

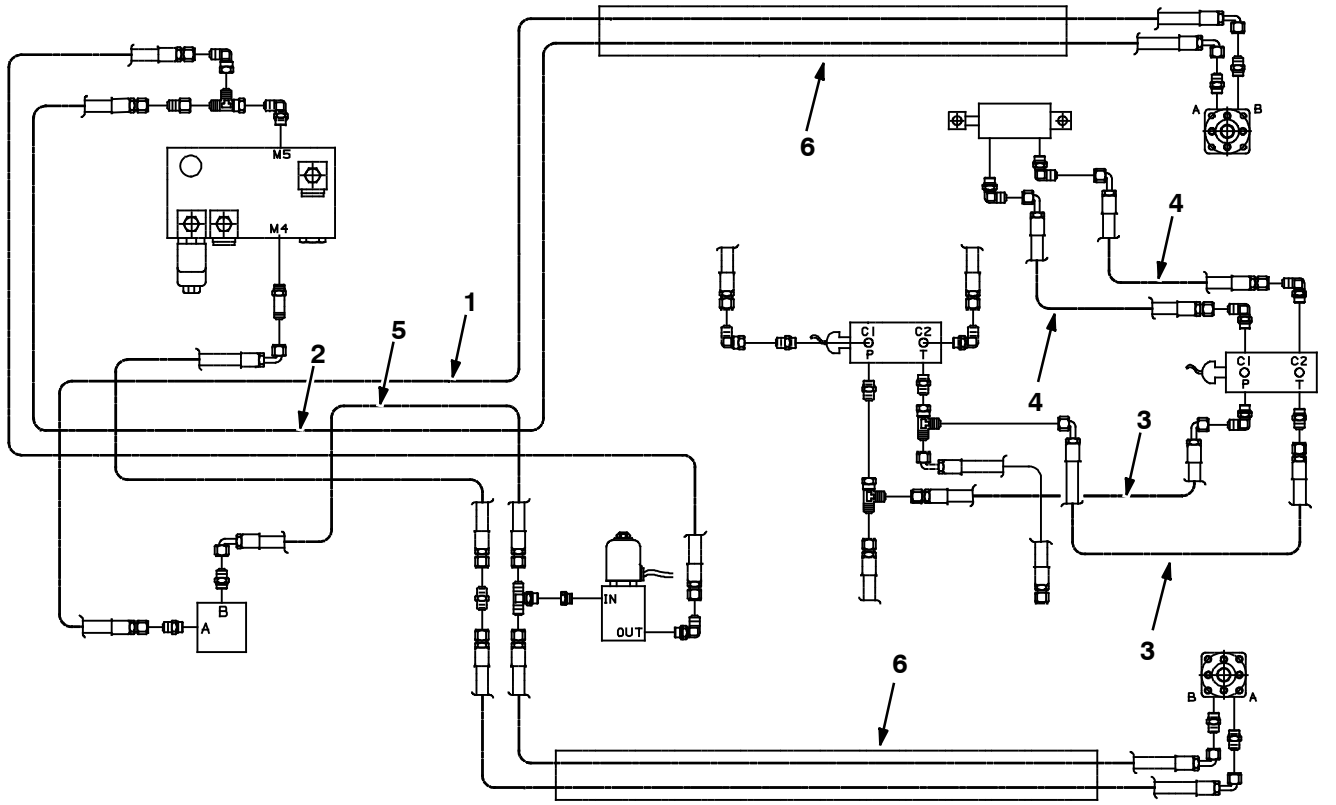

08763 - 800

Ref.	Part No.	Serial Number		Description	Qty.
1	76684	(004000-	)	Hose- Hyd Med 06	1
2	65194	(004000-	)	Hose, Hyd, Med06, Jf06e90/Jf06str, 072.0	1
3	78998	(004000-	)	Hose- Hyd Med 06	2
4	57963	(004000-	)	Hose- Hyd Med 04	2
5	01999	(004000-	)	Hose- Hyd Med 06	1
6	76461	(004000-	)	Sleeve, Nyl, #27 55.0l	2

Fig. 27 - Side Brush Light Kit, (004000-008088)

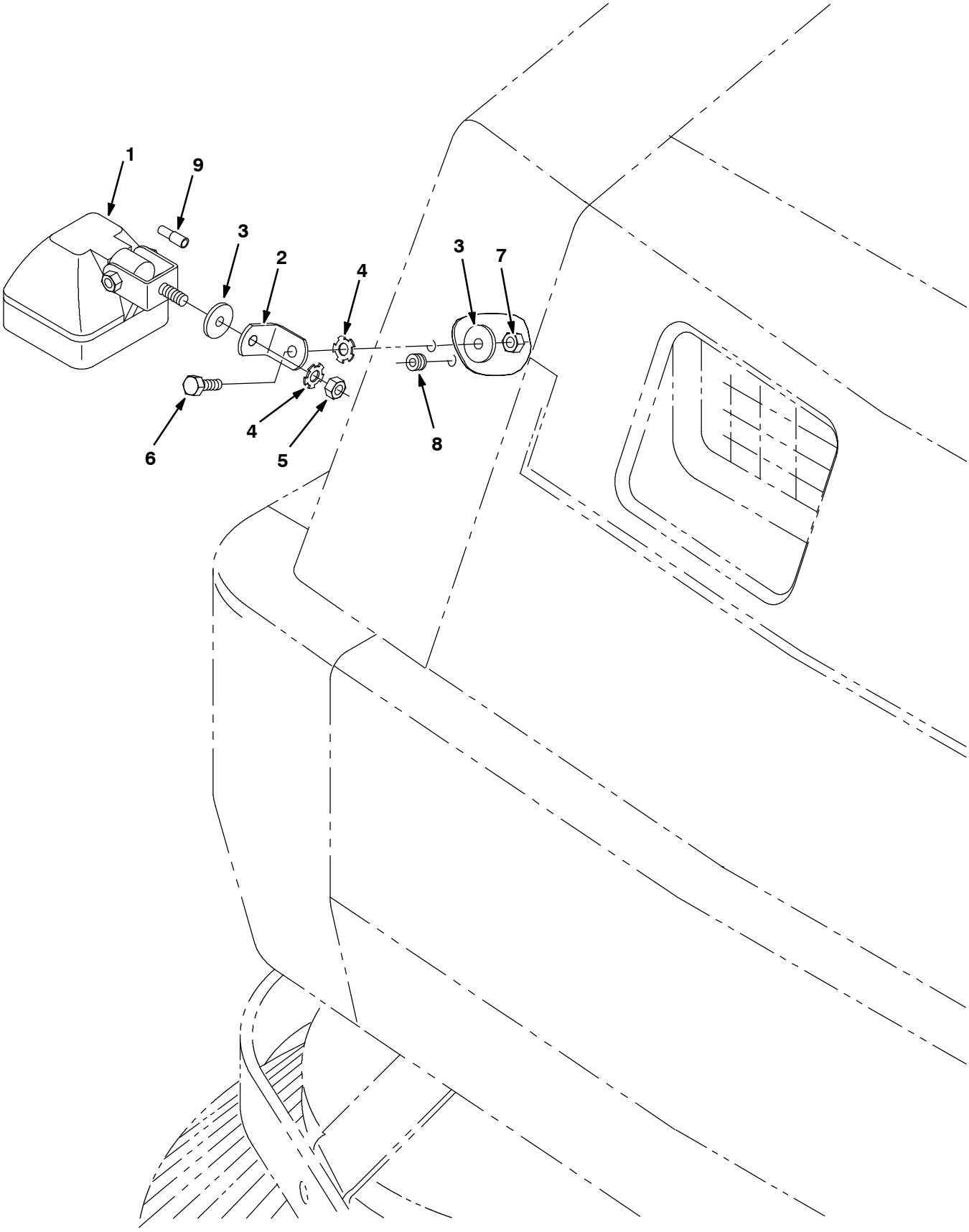

08756 - ALL

Fig. 27 - Side Brush Light Kit, (004000-008088)

	Ref.	Part No.	Serial Number	Description	Qty.
▽		70699	(004000-008088)	Light Kit, Side Brush	1
▲▽	1	382979	(004000-008088)	Light, Spot, 12VDC 55w	1
▲▲		393770	(004000-008088)	Lamp, 12VDC 55w	1
▲	2	76385	(004000-008088)	Bracket, Angle	1
▲	3	30013	(004000-008088)	Washer, Flat, 0.31 Fender	1
▲	4	41141	(004000-008088)	Washer-Loc Int-Ext .31 Pltd	2
▲	5	32960	(004000-008088)	Nut, Hex, Lock, .31-24, Nl	1
▲	6	16931	(004000-008088)	Screw, Hex, M08 X 1.25 X 20, 8.8	1
▲	7	08709	(004000-008088)	Nut, Hex, Lock, M08 X 1.25,Nl	1
▲	8	10632-5	(004000-008088)	Grommet Rbr 0.25Id For .09Matl	1
▲	9	32668	(004000-008088)	Connector, Ele, Plug, Femal, .156d	1

Fig. 28 - Side Brush Light Kit, (008089-)

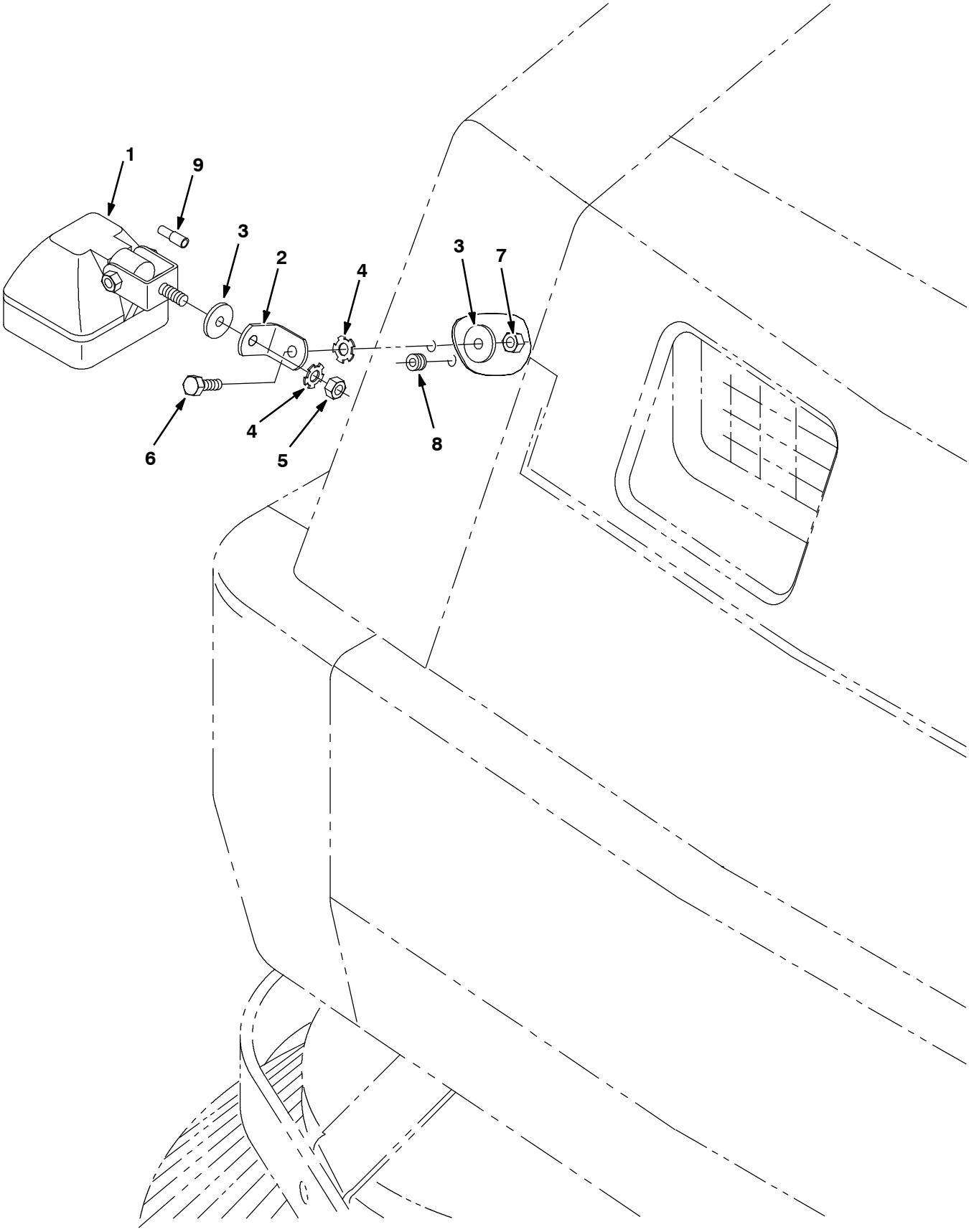

08756 - ALL

Fig. 28 - Side Brush Light Kit, (008089-)

	Ref.	Part No.	Serial Number	Description	Qty.
▽		9012891	(008089-)	Light Kit, Brush, Side, Ci [800gray]	1
▲▽	1	382979	(008089-)	Light, Spot, 12VDC 55w	1
▲▲		393770	(008089-)	Lamp, 12VDC 55w	1
▲	2	1073927	(008089-)	Bracket, Angle [Gray]	1
▲	3	30013	(008089-)	Washer, Flat, 0.31 Fender	1
▲	4	41141	(008089-)	Washer- Loc Int- Ext .31 Pltd	2
▲	5	32960	(008089-)	Nut, Hex, Lock, .31- 24, Nl	1
▲	6	16931	(008089-)	Screw, Hex, M08 X 1.25 X 20, 8.8	1
▲	7	08709	(008089-)	Nut, Hex, Lock, M08 X 1.25,Nl	1
▲	8	10632- 5	(008089-)	Grommet Rbr 0.25Id For .09Matl	1
▲	9	32668	(008089-)	Connector, Ele, Plug, Femal, .156d	1

Fig. 29 - Cab Kit

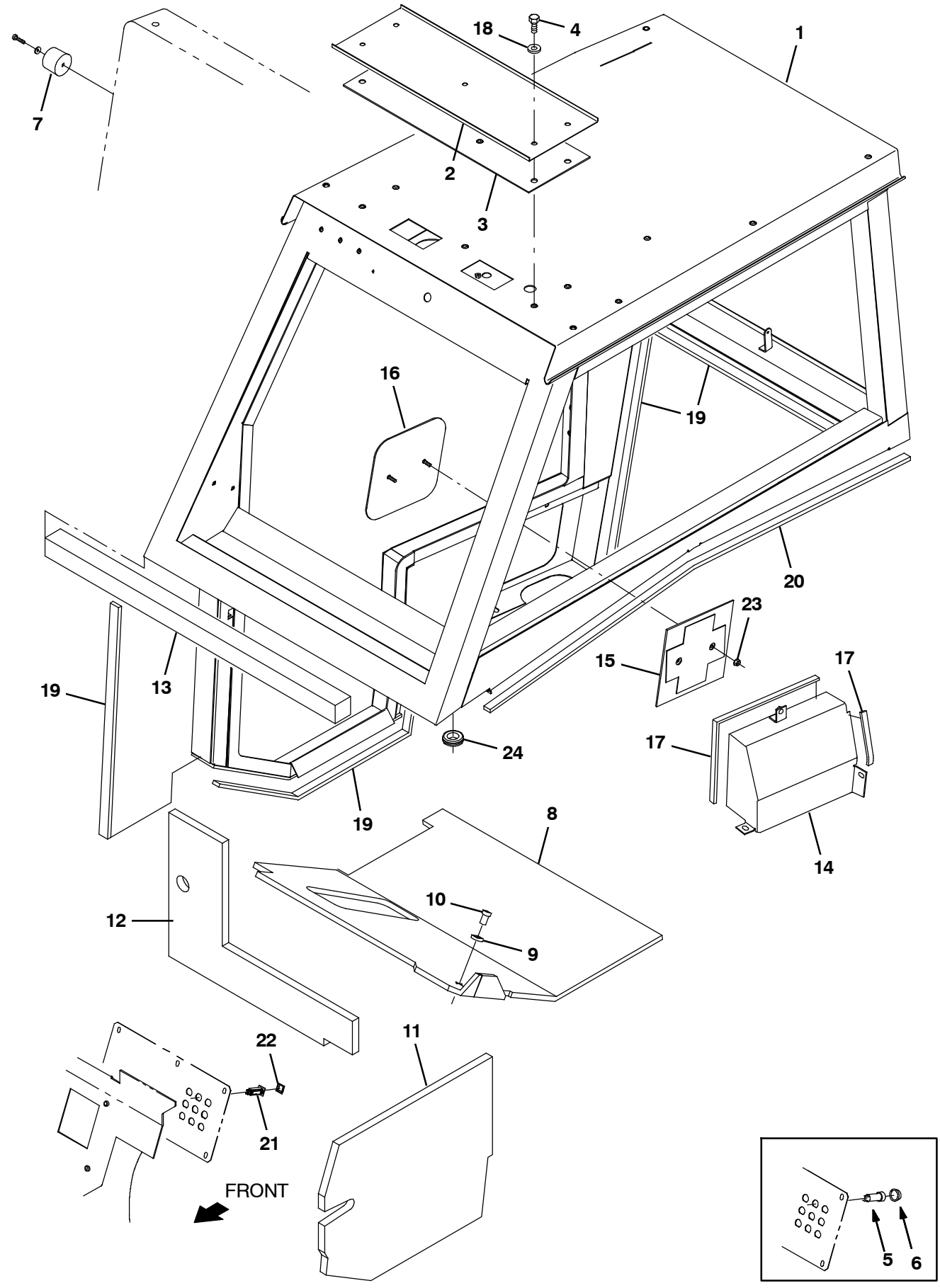

351139 - G, LP

Fig. 29 - Cab Kit

NOTE: The Cab kit, TENNANT Part Number 380601 is for machines serial number 008088 and below and includes Fig. 29, Fig. 30 and Fig. 32.

NOTE: The Cab kit, TENNANT Part Number 9012866 is for machines serial number 008089 and above and includes Fig. 29, Fig. 31, and Fig. 32.

Ref.	Part No.	Serial Number	Description	Qty.
1	9007651	(004000- 008088)	Cab Assy, Oprtr [800] (See Breakdowns)	1
1	9012887	(008089-)	Cab Assy, Oprtr [800 Gray]	1
2	380634	(004000- 008088)	Cover, Cab Pressurizer	1
2	1073908	(008089-)	Cover, Pressrzr, Cab [Gray]	1
3	380635	(004000-)	Gasket, Cab Pressurizer	1
4	06943	(004000-)	Screw, Hex, M6 X 1.00 X 20, 8.8	4
5	57803	(004000- 007289)	Breaker- Circuit, 15 Resetable	1
6	57751	(004000- 007289)	Boot, Circuit Breaker	1
7	44851	(004000-)	Bumper, Rubber	1
8	76522	(004000-)	Tread, Rubber	1
9	41178	(004000-)	Washer- Flt .25 Fender	1
10	21246	(004000-)	Rivet, Plastic	1
11	77652	(004000-)	Insulation, Acstc, Side, Lower, .8t	1
12	76516	(004000-)	Insulation, Acstc, Front, Lower	1
13	1068383	(004000-)	Seal, Foam, 2.00 2.00w 37.0l, Adh	1
14	70620	(004000- 008088)	Cover Wldt, Fuel Inlet	1
14	1073870	(008089-)	Cover Wldt, Fuel Inlet [800 Gray]	1
15	70785	(004000-)	Plate Wldt, Inlet, Fuel (LPG Only)	1
16	70788	(004000- 008088)	Cover Wldt, Inlet, Fuel (LPG Only)	1
16	1073873	(008089-)	Cover, Cab, Lpg [800 Gray]	1
17	1015224	(004000-)	Seal, Afmkt, Ure, Adh, 0.38, 0.75w 01ft	2
18	32490	(004000-)	Washer, Flat, 0.25, Std	4
19	1015184	(004000-)	Seal, Afmkt, Ure, Adh, 0.50, 1.00w 03ft	6
20	1015182	(004000-)	Seal, Afmkt, Ure, Adh, 0.50, 1.00w 08ft	1
21	1064188	(007290-)	Circuitbreaker, 15A, Resetable	1
22	1064191	(007290-)	Boot, Circuitbreaker	1
23	07790	(004000-)	Nut, Hex, Flng, M6 X 1.00	2
24	10632- 14	(004000-)	Grommet, Rbr, 1.00id, F/1.4h, .12 Matl	1

Fig. 30 - Cab Mirror Kit (004000-008088)

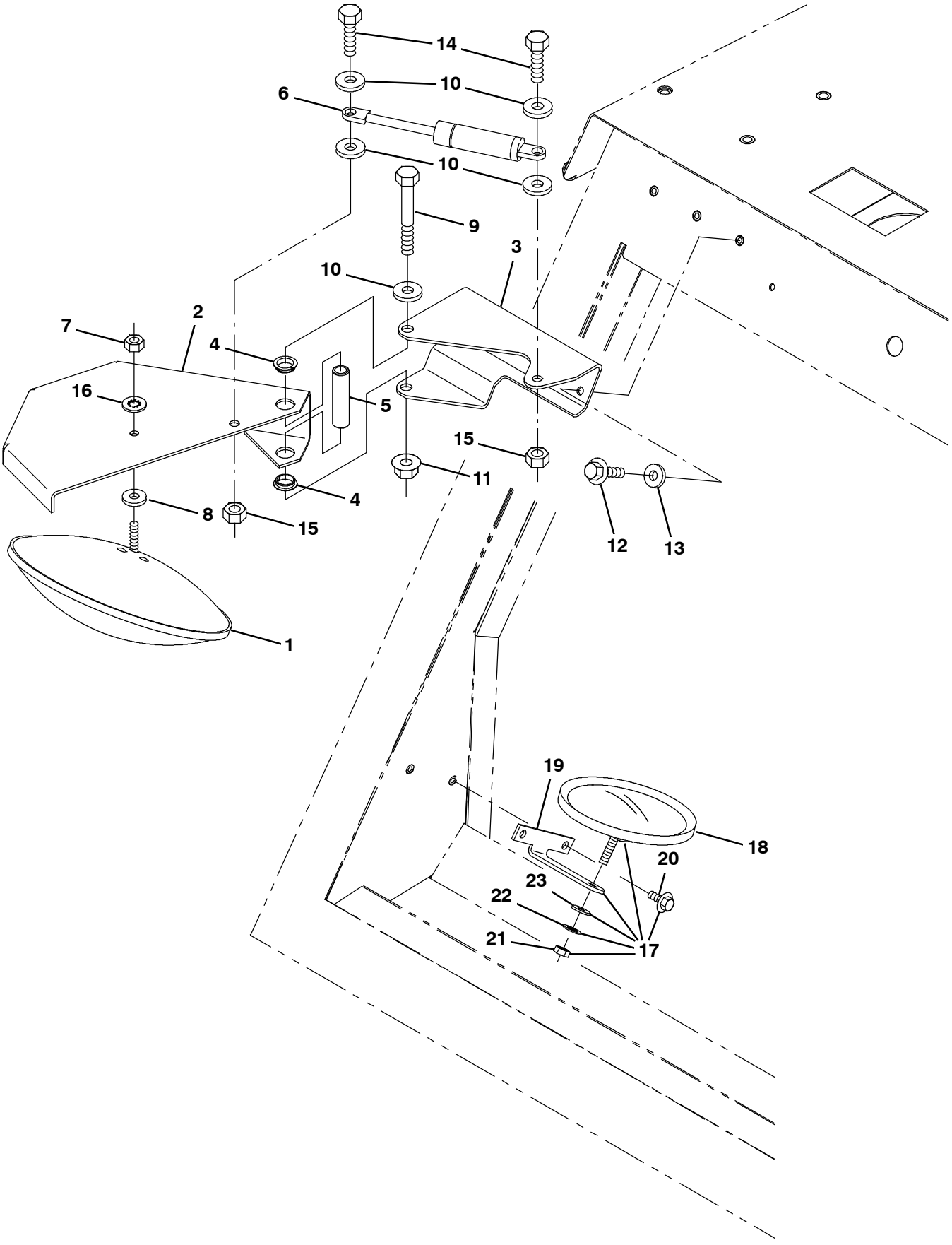

08961 - ALL

Fig. 30 - Cab Mirror Kit (004000-008088)

NOTE: The Cab kit, TENNANT Part Number 380601 is for machines serial number 008088 and below and includes Fig. 29, Fig. 30 and Fig. 32.

	Ref.	Part No.	Serial Number	Description	Qty.
▽		76898	(004000-008088)	Mirror Kit, Side Brush	1
▲	1	68445	(004000-008088)	Mirror,8.0 Round,Convex	1
▲	2	75881	(004000-008088)	Guard, Mirror	1
▲	3	1061949	(004000-008088)	Bracket, Mirror, Mtg	1
▲	4	41434	(004000-008088)	Bshg,Flange,0.62Bx0.68Od,Nylon	2
▲	5	70761	(004000-008088)	Tube, 0.62D .44B 2.44, Stl	1
▲	6	12549	(004000-008088)	Spring, Gas 80 Lb	1
▲	7	01691	(004000-008088)	Nut, Hex, Std, .31-18, Ss	1
▲	8	01685	(004000-008088)	Washer, Flat, 0.38b 0.88d .08, Ss	1
▲	9	03193	(004000-008088)	Screw, Hex, M10 X 1.50 X 90, 8.8	1
▲	10	32492	(004000-008088)	Washer, Flat, 0.38, Std	1
▲	11	07792	(004000-008088)	Nut, Hex, Flng, M10 X 1.50	1
▲	12	76099	(004000-008088)	Screw, Hex, M8 X 1.25 X 25, Fmg	3
▲	13	32491	(004000-008088)	Washer, Flat, 0.31, Std	3
▲	14	21195	(004000-008088)	Screw, Hex, .38-16 X 0.75, G5	2
▲	15	50902	(004000-008088)	Nut, Hex, Lock, .38-16, Nl	2
▲	16	43952	(004000-008088)	Washer, Lock, Int, 0.31, Ss	1
▲▽	17	369786	(004000-008088)	Mirror Assembly	1
▲▲	18	1050295	(004000-008088)	Mirror, Convex, 0.50d	1
▲▲	19	49032	(004000-008088)	Bracket, Mtg, Mirror	1
▲▲	20	74455	(004000-008088)	Screw, Hex m06	2
▲▲	21	01691	(004000-008088)	Nut, Hex, Std, .31-18, Ss	1
▲▲	22	43952	(004000-008088)	Washer, Lock, Int, 0.31 Ss	1
▲▲	23	01685	(004000-008088)	Washer, Flat, 0.31 Ss	1

Fig. 31 - Cab Mirror Kit (008089-)

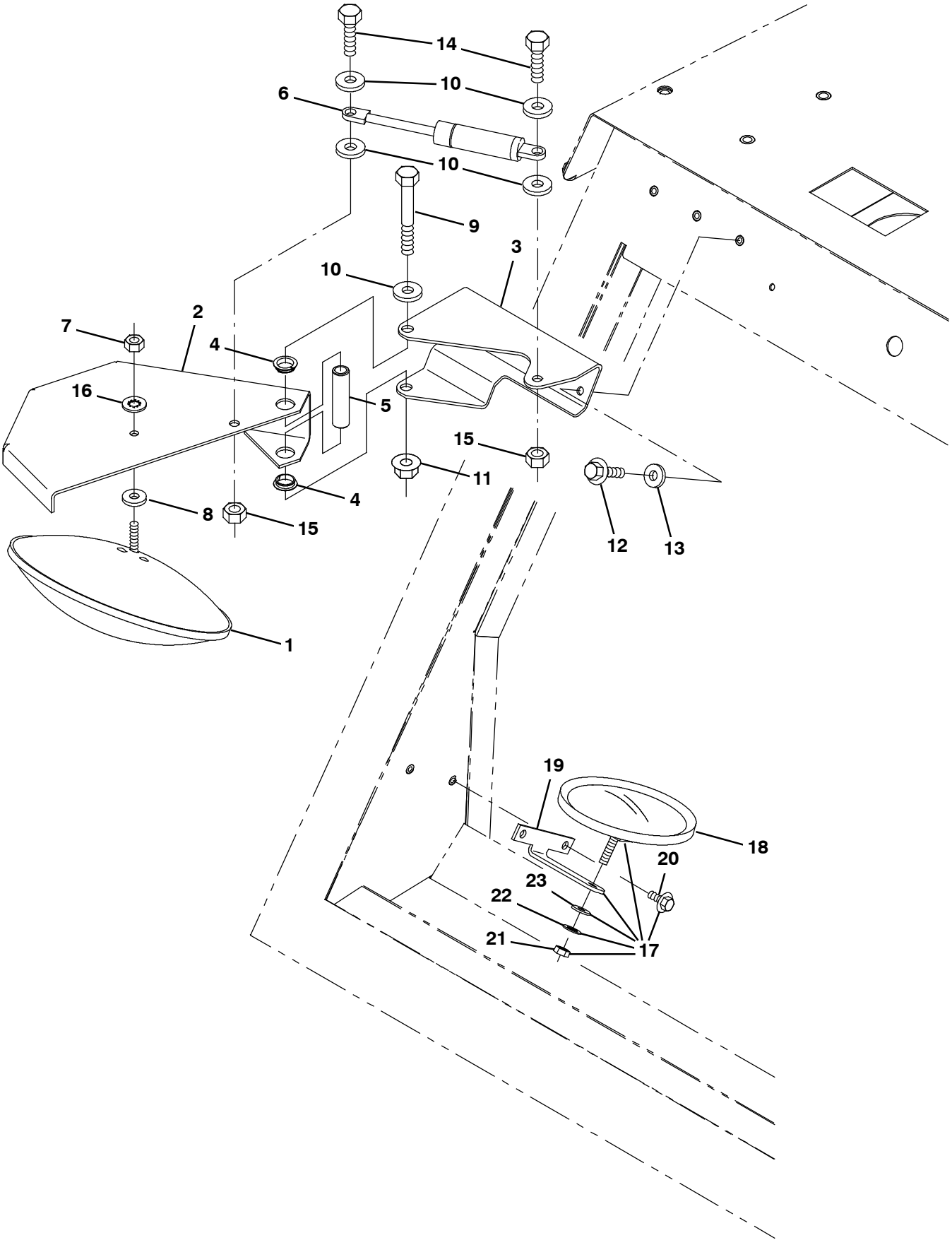

08961 - ALL

Fig. 31 - Cab Mirror Kit (008089-)

NOTE: The Cab kit, TENNANT Part Number 9012866 is for machines serial number 008089 and above and includes Fig. 29, Fig. 31, and Fig. 32.

	Ref.	Part No.	Serial Number	Description	Qty.
▽		9012869	(008089-)	Mirror Kit, Brush, Side, Cab, Ci[800lgr]	1
▲	1	68445	(008089-)	Mirror,8.0 Round,Convex	1
▲	2	1073925	(008089-)	Guard, Mirror [Gray]	1
▲	3	1073932	(008089-)	Bracket, Mtg, Mirror [800 Gray]	1
▲	4	41434	(008089-)	Bshg,Flange,0.62Bx0.68Od,Nylon	2
▲	5	70761	(008089-)	Tube, 0.62D .44B 2.44, Stl	1
▲	6	12549	(008089-)	Spring, Gas 80 Lb	1
▲	7	01691	(008089-)	Nut, Hex, Std, .31- 18, Ss	1
▲	8	01685	(008089-)	Washer, Flat, 0.38b 0.88d .08, Ss	1
▲	9	03193	(008089-)	Screw, Hex, M10 X 1.50 X 90, 8.8	1
▲	10	32492	(008089-)	Washer, Flat, 0.38, Std	1
▲	11	07792	(008089-)	Nut, Hex, Flng, M10 X 1.50	1
▲	12	76099	(008089-)	Screw, Hex, M8 X 1.25 X 25, Fmg	3
▲	13	32491	(008089-)	Washer, Flat, 0.31, Std	3
▲	14	21195	(008089-)	Screw, Hex, .38- 16 X 0.75, G5	2
▲	15	50902	(008089-)	Nut, Hex, Lock, .38- 16, Nl	2
▲	16	43952	(008089-)	Washer, Lock, Int, 0.31, Ss	1
▲▽	17	369786	(008089-)	Mirror Assembly	1
▲▲	18	1050295	(008089-)	Mirror, Convex, 0.50d	1
▲▲	19	1073867	(008089-)	Bracket, Mtg, Mirror, Rearview[800 Gray]	1
▲▲	20	74455	(008089-)	Screw, Hex m06	2
▲▲	21	01691	(008089-)	Nut, Hex, Std, .31- 18, Ss	1
▲▲	22	43952	(008089-)	Washer, Lock, Int, 0.31 Ss	1
▲▲	23	01685	(008089-)	Washer, Flat, 0.31 Ss	1

Fig. 32 - Cab Seals Group

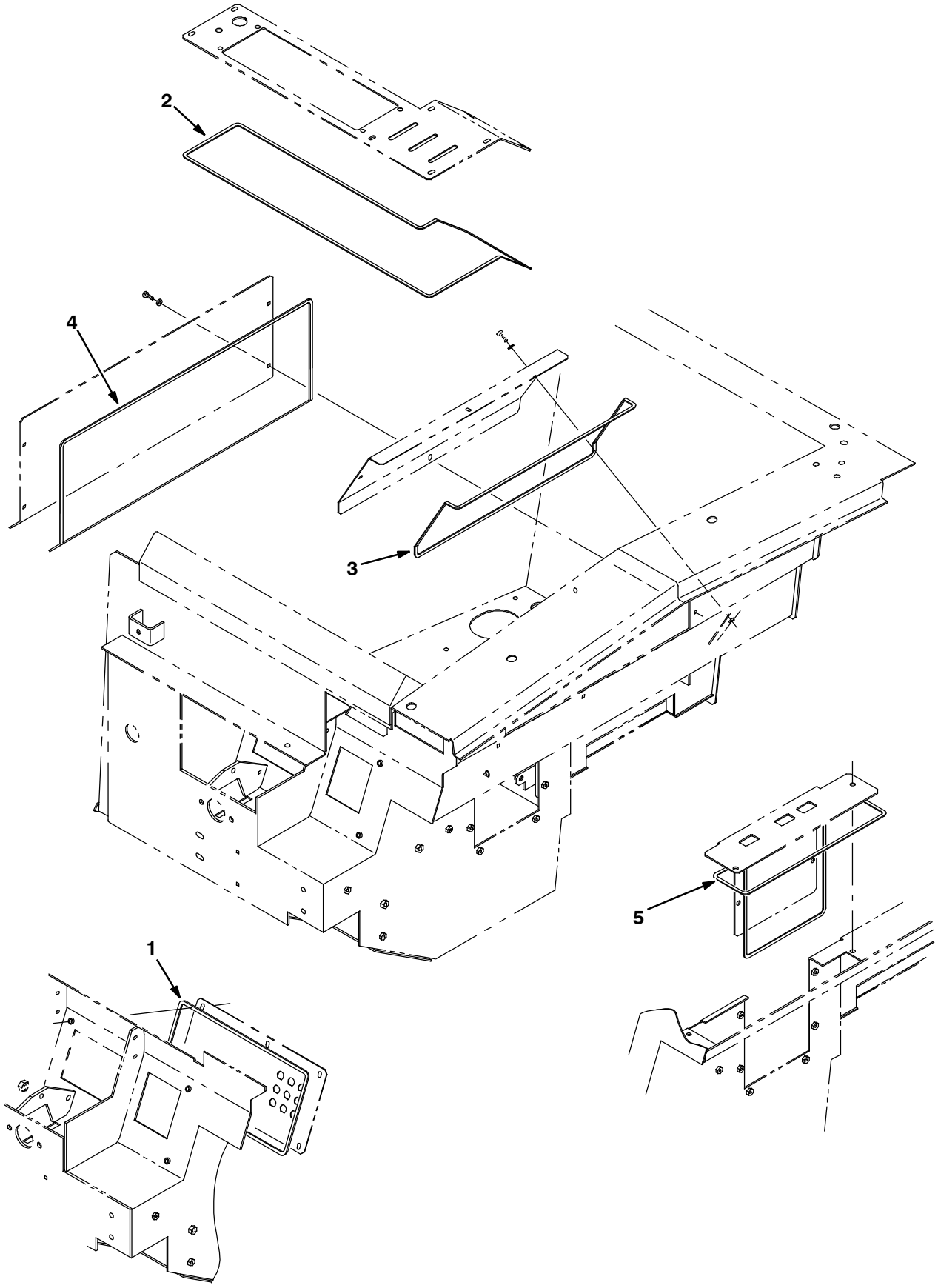

354321 - ALL

Fig. 32 - Cab Seals Group

NOTE: The Cab kit, TENNANT Part Number 380601 is for machines serial number 008088 and below and includes Fig. 29, Fig. 30 and Fig. 32.

NOTE: The Cab kit, TENNANT Part Number 9012866 is for machines serial number 008089 and above and includes Fig. 29, Fig. 31, and Fig. 32.

Ref.	Part No.	Serial Number	Description	Qty.
1	1021969	(004000-)	Seal, Foam, .06t .25w 42.0l	1
2	1021968	(004000-)	Seal, Foam, .06t .25w 84.0l	1
3	1021937	(004000-)	Seal, Foam, .06t .25w 54.0l	1
4	1021966	(004000-)	Seal, Foam, .06t .25w 76.0l	1
5	1021951	(004000-)	Seal, Foam, .06t .25w 34.0l	1

Fig. 33 - Cab AC and Heater Box Group, Ford

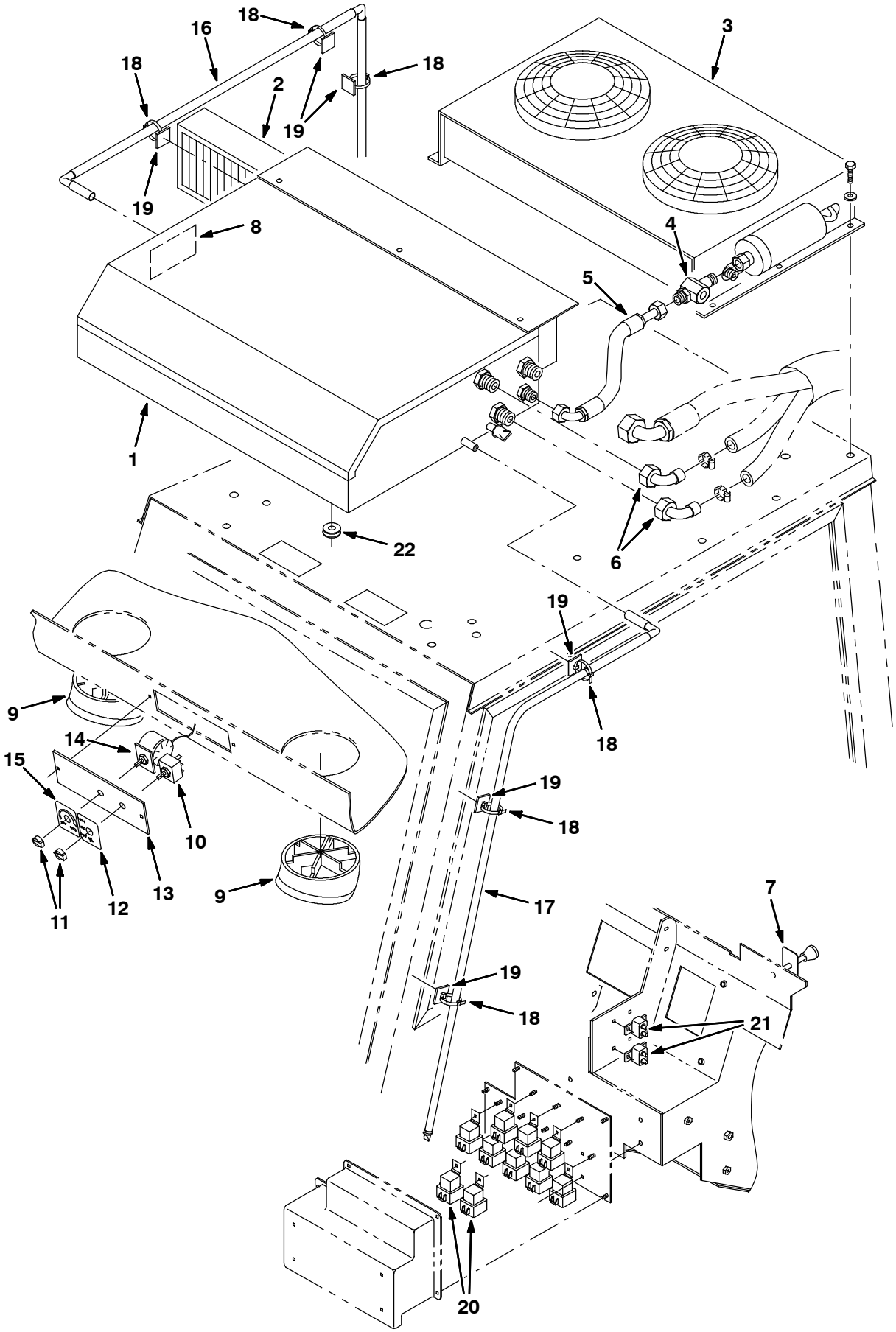

354065 - G, LP

Fig. 33 - Cab AC and Heater Box Group, Ford

NOTE: AC/Heater kit, TENNANT Part Number 380574 includes Fig. 33, Fig. 34, and Fig. 35.

	Ref.	Part No.	Serial Number	Description	Qty.
▽		380576	(004000- 004936)	Heater & A/C, W/ Fan, Roof	1
▲	1	380613	(004000- 004936)	Box Assy, Heater, A/C (See Breakdowns)	1
▲	2	380689	(004000- 004936)	Filter, Panel, Heat- A/C	1
▲	3	380625	(004000- 004936)	Condenser, A/C, Roof (See Breakdowns)	1
▲	4	380630	(004000- 004936)	Gauge, Sight, A/C	1
▲	5	380684	(004000- 004936)	Hose, A/C, 06 09.0l	1
▲	6	380615	(004000- 004936)	Fitting, Elbow	2
▲	7	380663	(004000- 004936)	Label, Opertnl, Pull Heat	1
▲	8	380673	(004000- 004936)	Label, Caution	1
▲	9	380617	(004000- 004936)	Louver, Adj, Heat- A/C	2
▲	10	380619	(004000- 004936)	Switch, 3 Pos, Blower, Heat	1
▲	11	380661	(004000- 004936)	Knob, Rnd, Control, Heat- A/C	2
▲	12	380662	(004000- 004936)	Label, Opertnl, Fan, Hi/Med/Low	1
▲	13	380690	(004000- 004936)	Plate, Mtg, Switch, A/C	1
▲	14	380624	(004000- 004936)	Switch, Thermo, A/C	1
▲	15	380665	(004000- 004936)	Label, Opertnl, Temp	1
▲	16	374134	(004000- 004936)	Hose Assy, Drain, A/C	1
▲	17	374135	(004000- 004936)	Hose Assy, Drain, A/C	1
▲	18	49266	(004000- 004936)	Tie, Cable, Nyl, 07.3l .19w 1.8 Max D	10
▲	19	55248	(004000- 004936)	Mount, Cable Tie	10
	20	56186	(004000- 004936)	Relay, 12vdc, 40a, Spdt N/O	2
	21	374210	(004000- 004936)	Circuitbreaker, 20.0a, Thermal	2
	22	77811	(004000- 004936)	Grommet, Cab, Harness, Wire	1

Fig. 34 - Cab AC and Heater Hose Group, Ford

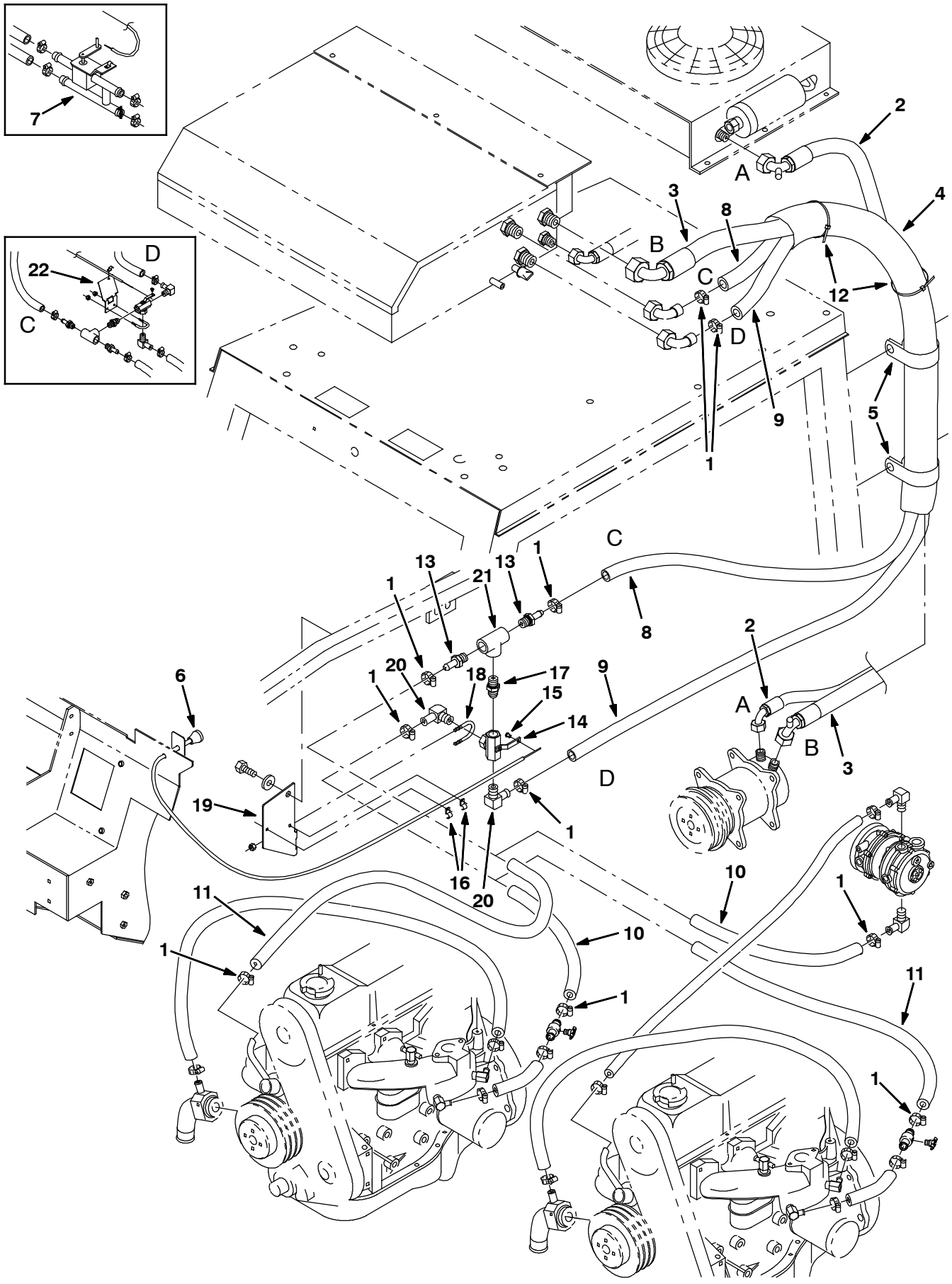

354066 - G, LP

Fig. 34 - Cab AC and Heater Hose Group, Ford

NOTE: AC/Heater kit, TENNANT Part Number 380574 includes Fig. 33, Fig. 34, and Fig. 35.

	Ref.	Part No.	Serial Number	Description	Qty.
	1	63810	(004000- 004936)	Clamp, Hose, Wormdrive, 0.56- 1.06d	8
	2	380685	(004000- 004936)	Hose, A/C, 08 100.0l [R134]	1
	3	380686	(004000- 004480)	Hose, A/C, 12 107.0l [R134]	1
	3	375751	(004481- 004936)	Hose, A/C, 12 115.0l [R134]	1
	4	375512	(004000- 004936)	Sleeve, Nyl, #33 65.0l	1
	5	41016	(004000- 004936)	Clamp, Cable, Stl, 2.25d X 1.00w, 1h	1
	6	43558A	(004000- 004936)	Cable, Cntrl, Choke, 85/90l 1.4d Knob	1
	7	380618	(004000- 004374)	Valve, Water, Heater, H, 10bm	1
	8	380621	(004000- 004936)	Hose, Heater, 0.62id 80.0l	1
	9	380620	(004000- 004936)	Hose, Heater, 0.62id 77.0l	1
	10	72979	(004000- 004718)	Hose, Heater, 0.62id 20.0l	1
	10	61870	(004719- 004936)	Hose, Heater, 0.62id 31.0l	1
	11	72978	(004000- 004718)	Hose, Heater, 0.62id 13.0l	1
	11	61869	(004719- 004936)	Hose, Heater, 0.62id 24.0l	1
	12	763116	(004000- 004936)	Tie, Cable, Nyl, 15.3l . W 4.5 Max D	3
▽		375728	(004375- 004936)	Valve Assy, Ball, 3 Way, Em10/Em10/Em10	1
▲	13	59901	(004375- 004936)	Fitting, Brs, Str, Em10/Pm08	2
▲	14	31507	(004375- 004936)	Valve, Ball, 3- way, 08pf/08pf/08pf Brs	1
▲	15	43242	(004375- 004936)	Swivel	1
▲	16	1043352	(004375- 004936)	Clamp, Cable, Stl, 0.18d X 0.75w, 1hole	2
▲	17	40573	(004375- 004936)	Fitting, Hyd, Str, Pm08/Pm08	1
▲	18	45142	(004375- 004936)	Bolt, U, .25- 20 X 2.00, 1.10id	1
▲	19	374129	(004719- 004936)	Bracket, Mtg, Valve, Cntrl, Heater	1
▲	20	30268	(004375- 004936)	Fitting, Brs, E90, Em10/Pm08	2
▲	21	24450	(004375- 004936)	Fitting, Brs, Tee, Pf08/Pf08/Pf08	1
	22	375726	(004375- 004718)	Bracket, Mtg, Valve,Control, Heater	1

Fig. 35 - Cab AC Compressor Group, Ford

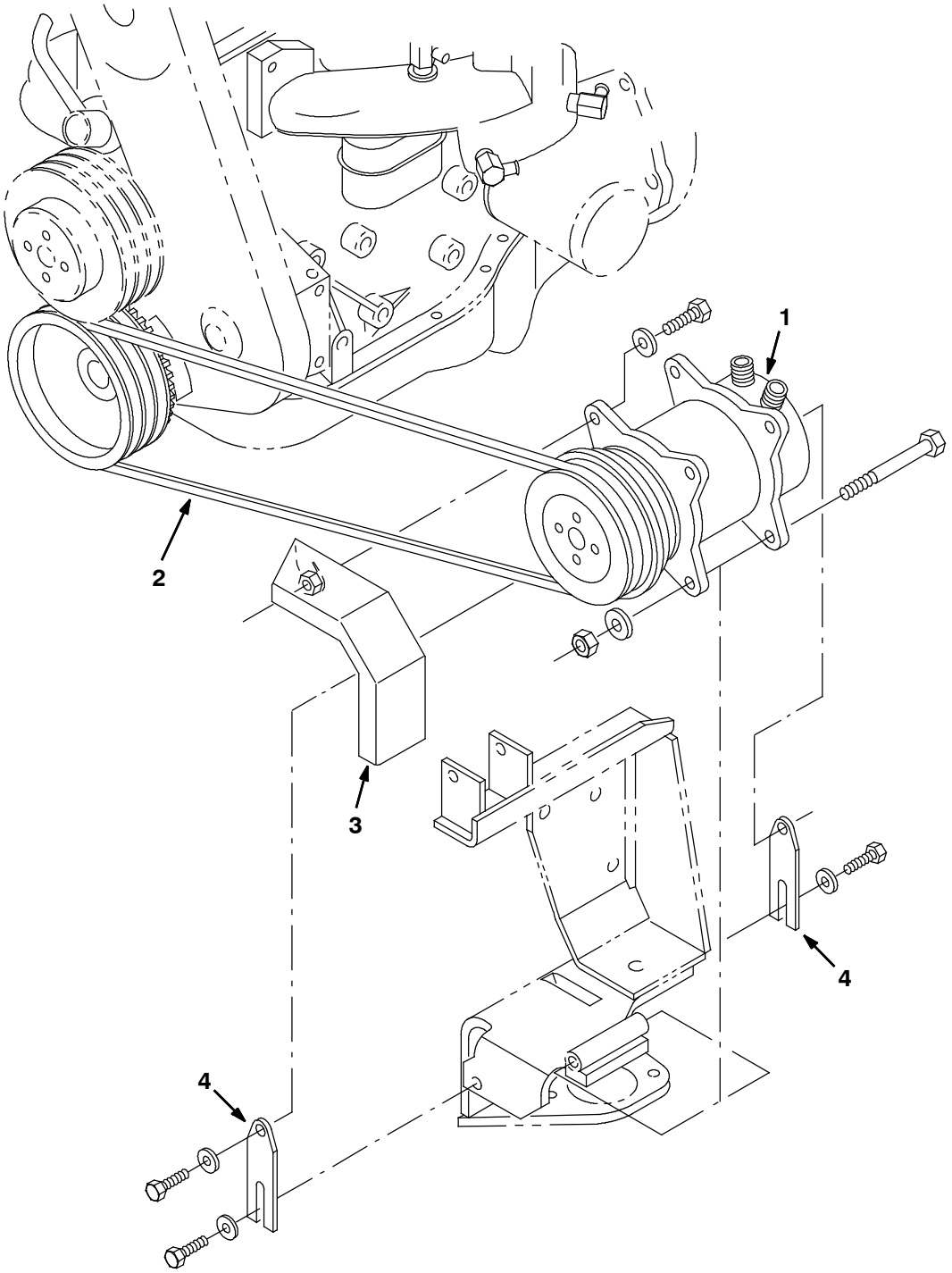

350810 - G, LP

Fig. 35 - Cab AC Compressor Group, Ford

NOTE: AC/Heater kit, TENNANT Part Number 380574 includes Fig. 33, Fig. 34, and Fig. 35.

Ref.	Part No.	Serial Number	Description	Qty.
1	77674	(004000- 004936)	Compressor, A/C	1
2	380676	(004000- xxxxxx)	Belt, V, Hc41 41.1L	1
2	375729	(xxxxxx- 004936)	Belt, V, Hc41 40.1L	1
3	380563	(004000- 004936)	Bracket, Belt, Guard, Ac	1
4	380697	(004000- 004936)	Link, Tension 2.4L	2

Fig. 36 - Cab AC and Heater Box Group, GM (004937-008088)

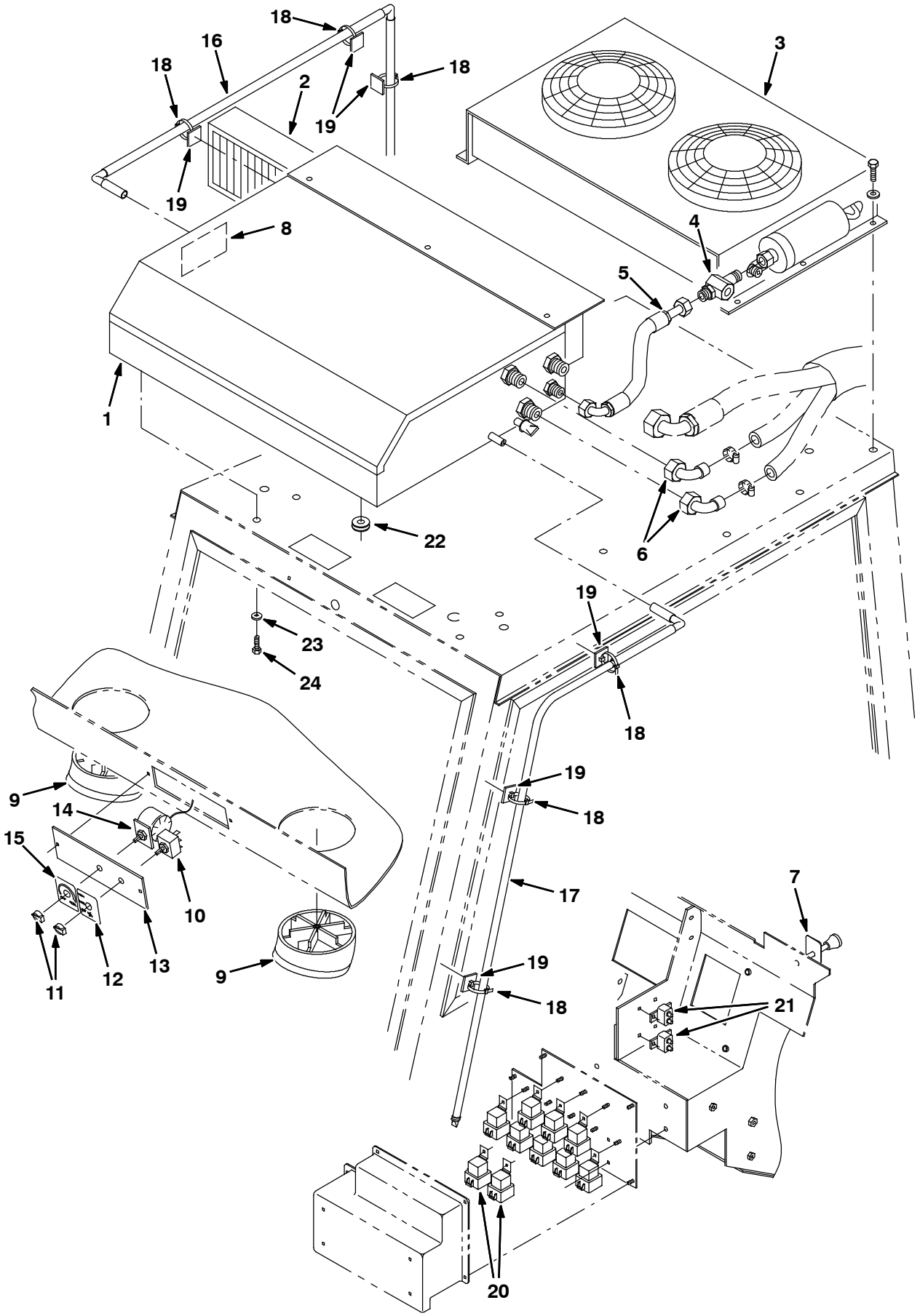

354065 - G, LP

Fig. 36 - Cab AC and Heater Box Group, GM (004937-008088)

NOTE: AC/Heater kit, TENNANT Part Number 374287 for machines serial number 006999 and below and includes Fig. 36, Fig. 38, and .Fig. 39

NOTE: AC/Heater kit, TENNANT Part Number 900299 for machines serial number 007000-008088 includes Fig. 36, Fig. 38, and .Fig. 40

	Ref.	Part No.	Serial Number	Description	Qty.
▽		380576	(004937-008088)	Heater & A/C, W/ Fan, Roof	1
▲	1	380613	(004937-008088)	Box Assy, Heater, A/C (See Breakdowns)	1
▲	2	380689	(004937-008088)	Filter, Panel, Heat-A/C	1
▲	3	380625	(004937-008088)	Condenser, A/C, Roof (See Breakdowns)	1
▲	4	380630	(004937-008088)	Gauge, Sight, A/C	1
▲	5	380684	(004937-008088)	Hose, A/C, 06 09.0l	1
▲	6	380615	(004937-008088)	Fitting, Elbow	2
▲	7	380663	(004937-008088)	Label, Opertnl, Pull Heat	1
▲	8	380673	(004937-008088)	Label, Caution	1
▲	9	380617	(004937-008088)	Louver, Adj, Heat-A/C	2
▲	10	380619	(004937-008088)	Switch, 3 Pos, Blower, Heat	1
▲	11	380661	(004937-008088)	Knob, Rnd, Control, Heat-A/C	2
▲	12	380662	(004937-008088)	Label, Opertnl, Fan, Hi/Med/Low	1
▲	13	380690	(004937-008088)	Plate, Mtg, Switch, A/C	1
▲	14	380624	(004937-008088)	Switch, Thermo, A/C	1
▲	15	380665	(004937-008088)	Label, Opertnl, Temp	1
▲	16	374134	(004937-008088)	Hose Assy, Drain, A/C	1
▲	17	374135	(004937-008088)	Hose Assy, Drain, A/C	1
▲	18	49266	(004937-008088)	Tie, Cable, Nyl, 07.3l .19w 1.8 Max D	10
▲	19	55248	(004937-008088)	Mount, Cable Tie	10
	20	56186	(004937-008088)	Relay, 12vdc, 40a, Spdt N/O	2
	21	374210	(004937-008088)	Circuitbreaker, 20.0a, Thermal	2
	22	77811	(004937-008088)	Grommet, Cab, Harness, Wire	1
	23	32490	(004937-008088)	Washer, Flat, 0.25 Std	12
	24	12459	(004937-008088)	Screw, Hex, M6 X 1.0 X 20, Fmg	12

Fig. 37 - Cab AC and Heater Box Group, GM (008089-)

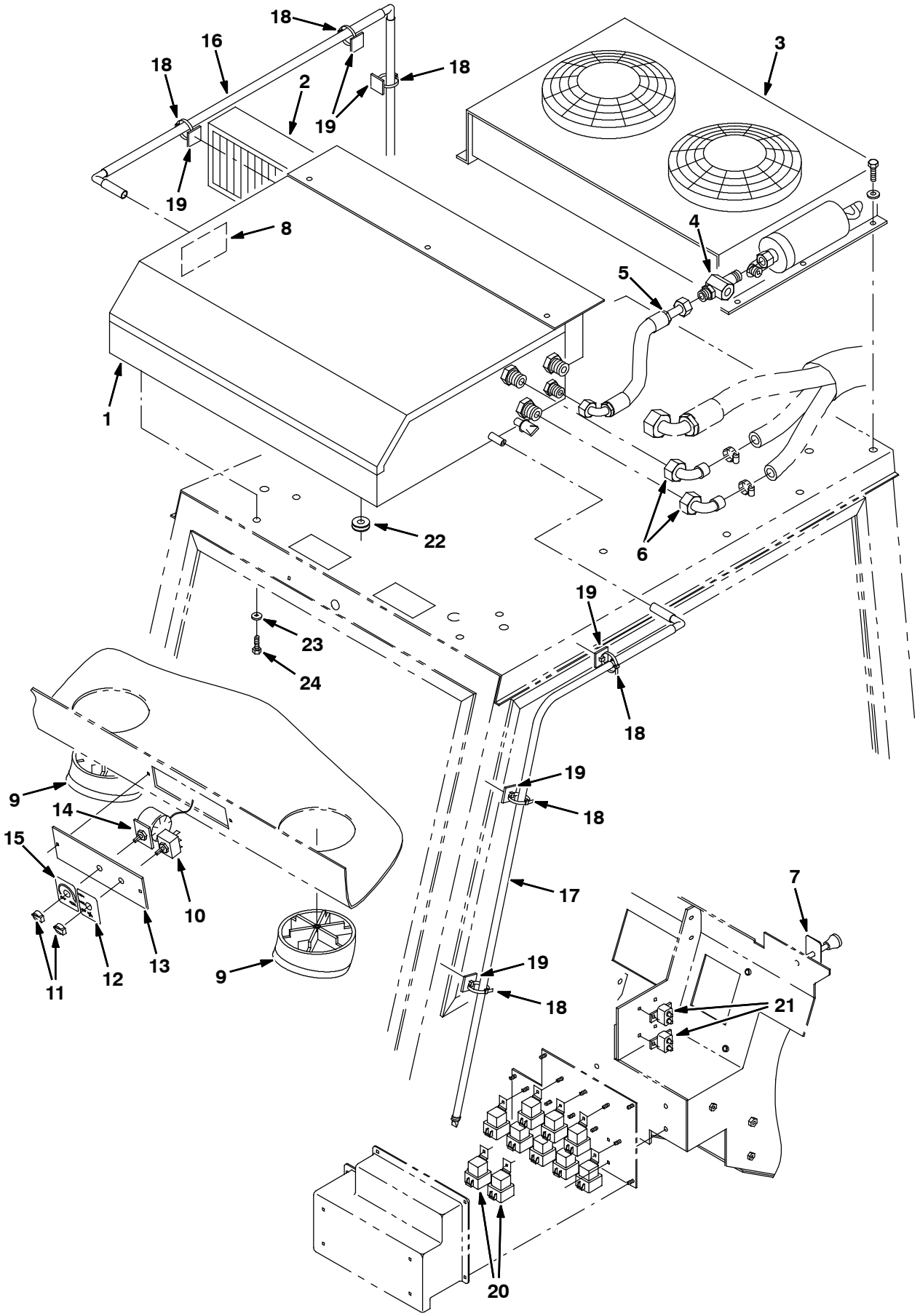

354065 - G, LP

Fig. 37 - Cab AC and Heater Box Group, GM (008089-)

NOTE: AC/Heater kit, TENNANT Part Number 9012894 for machines serial number 008089 and above and includes Fig. 37, Fig. 38, and .Fig. 40

	Ref.	Part No.	Serial Number	Description	Qty.
▽		9012893	(008089-)	Heater Assy, W/ A/C, Roof [R134, Gray]	1
▲	1	1073904	(008089-)	Heater, W/ A/C [Badger, Gray] (See Breakdowns)	1
▲	2	380689	(008089-)	Filter, Panel, Heat- A/C	1
▲	3	380625	(008089-)	Condenser, A/C, Roof (See Breakdowns)	1
▲	4	380630	(008089-)	Gauge, Sight, A/C	1
▲	5	380684	(008089-)	Hose, A/C, 06 09.0l	1
▲	6	380615	(008089-)	Fitting, Elbow	2
▲	7	380663	(008089-)	Label, Opertnl, Pull Heat	1
▲	8	380673	(008089-)	Label, Caution	1
▲	9	380617	(008089-)	Louver, Adj, Heat- A/C	2
▲	10	380619	(008089-)	Switch, 3 Pos, Blower, Heat	1
▲	11	380661	(008089-)	Knob, Rnd, Control, Heat- A/C	2
▲	12	380662	(008089-)	Label, Opertnl, Fan, Hi/Med/Low	1
▲	13	380690	(008089-)	Plate, Mtg, Switch, A/C	1
▲	14	380624	(008089-)	Switch, Thermo, A/C	1
▲	15	380665	(008089-)	Label, Opertnl, Temp	1
▲	16	374134	(008089-)	Hose Assy, Drain, A/C	1
▲	17	374135	(008089-)	Hose Assy, Drain, A/C	1
▲	18	49266	(008089-)	Tie, Cable, Nyl, 07.3l .19w 1.8 Max D	10
▲	19	55248	(008089-)	Mount, Cable Tie	10
	20	56186	(008089-)	Relay, 12vdc, 40a, Spdt N/O	2
	21	374210	(008089-)	Circuitbreaker, 20.0a, Thermal	2
	22	77811	(008089-)	Grommet, Cab, Harness, Wire	1
	23	32490	(008089-)	Washer, Flat, 0.25 Std	12
	24	12459	(008089-)	Screw, Hex, M6 X 1.0 X 20, Fmg	12

Fig. 38 - Cab AC and Heater Hose Group, GM

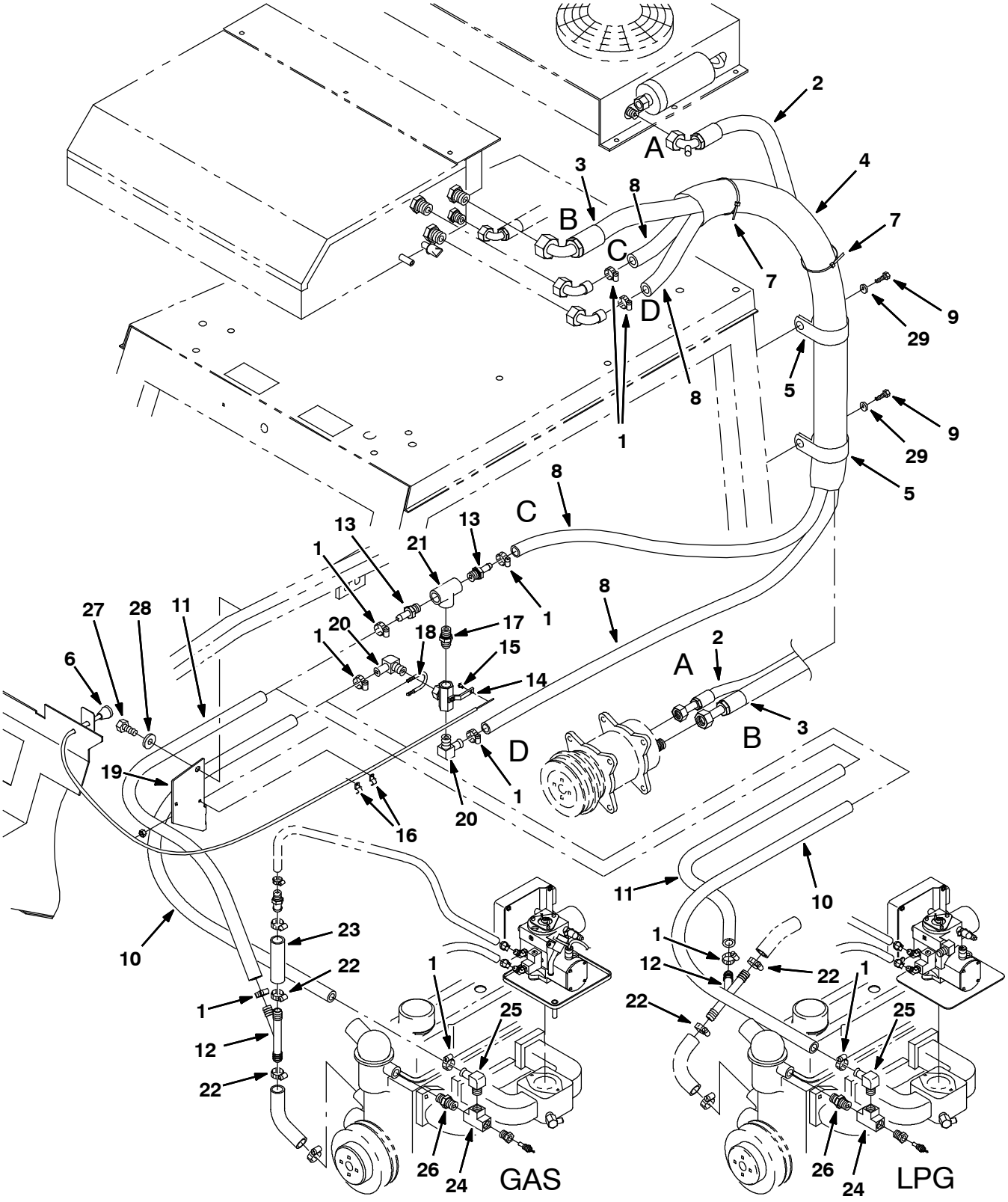

354064 - G, LP

Fig. 38 - Cab AC and Heater Hose Group, GM

NOTE: AC/Heater kit, TENNANT Part Number 374287 for machines serial number 006999 and below and includes Fig. 36, Fig. 38, and .Fig. 39

NOTE: AC/Heater kit, TENNANT Part Number 900299 for machines serial number 007000- 008088 includes Fig. 36, Fig. 38, and .Fig. 40

NOTE: AC/Heater kit, TENNANT Part Number 9012894 for machines serial number 008089 and above and includes Fig. 37, Fig. 38, and .Fig. 40

	Ref.	Part No.	Serial Number	Description	Qty.
	1	63810	(004937-)	Clamp, Hose, Wormdrive, 0.56- 1.06d	8
	2	1021799	(004937-)	Hose, A/C, 08, Str/E90, 112.0l [R134]	1
	3	1021797	(004937-)	Hose, A/C, 12, Str/E90, 127.0l [R134]	1
	4	375512	(004937-)	Sleeve, Nyl, #33 65.0l	1
	5	41016	(004937-)	Clamp, Cable, Stl, 2.25d X 1.00w, 1h	2
	6	43558A	(004937-)	Cable, Cntrl, Choke, 85/90l 1.4d Knob	1
	7	763116	(004937-)	Tie, Cable, Nyl, 15.3l . W 4.5 Max D	3
	8	1016561	(004937-)	Hose, Afmkt, Rbr, Heater, 0.62id, 08ft	2
	9	12459	(004937-)	Screw, Hex, M6 X 1.0 X 20, Fmg	2
	10	1016556	(004937-)	Hose, Afmkt, Rbr, Heater, 0.62id, 03ft	1
	11	1016560	(004937-)	Hose, Afmkt, Rbr, Heater, 0.62id, 02ft	1
	12	393255	(004937-)	Fitting, Plstc, Tee, Bm12/Bm12/Bm12	1
▽		375728	(004937-)	Valve Assy, Ball, 3 Way, Em10/Em10/Em10	1
▲	13	59901	(004937-)	Fitting, Brs, Str, Em10/Pm08	2
▲	14	31507	(004937-)	Valve, Ball, 3- way, 08pf/08pf/08pf Brs	1
▲	15	43242	(004937-)	Swivel	1
▲	16	1043352	(004937-)	Clamp, Cable, Stl, 0.18d X 0.75w, 1hole	2
▲	17	40573	(004937-)	Fitting, Hyd, Str, Pm08/Pm08	1
▲	18	45142	(004937-)	Bolt, U, .25- 20 X 2.00, 1.10id	1
▲	19	374129	(004937-)	Bracket, Mtg, Valve, Cntrl, Heater	1
▲	20	30268	(004937-)	Fitting, Brs, E90, Em10/Pm08	2
▲	21	24450	(004937-)	Fitting, Brs, Tee, Pf08/Pf08/Pf08	1
	22	11399	(004937-)	Clamp, Hose, Wormdrive, 0.81- 1.50d	2
	23	75197	(004937-)	Hose, Heater, 0.75id 04.0l	1
	24	24450	(004937-)	Fitting, Brass, Tee	1
	25	30268	(004937-)	Fitting, Brs, E90, Em10/Pm08	1
	26	40573	(004937-)	Fitting, Hyd, Str, Pm08/Pm08	1
	27	16930	(004937-)	Screw, Hex, M10 X 1.5 X 50, 8.8	1
	28	32492	(004937-)	Washer, Flat, 0.38 Std	1
	29	32490	(004937-)	Washer, Flat, 0.25 Std	2

Fig. 39 - Cab AC Compressor Group, GM (004937-006999)

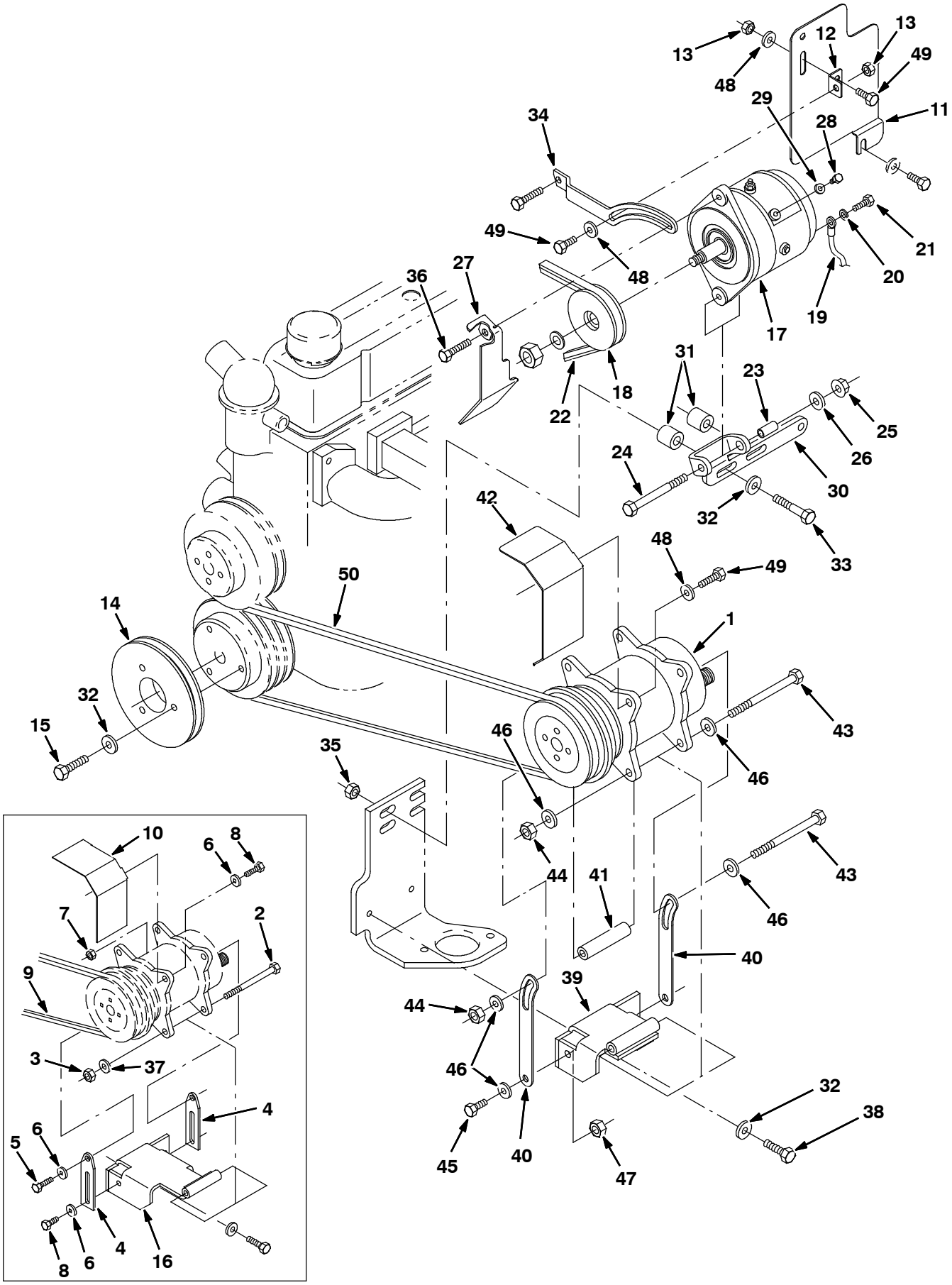

353878 - G, LP

Fig. 39 - Cab AC Compressor Group, GM (004937-006999)

NOTE: AC/Heater kit, TENNANT Part Number 374287 for machines serial number 006999 and below and includes Fig. 36, Fig. 38, and .Fig. 39

Ref.	Part No.	Serial Number	Description	Qty.
1	393219	(004937-006999)	Compressor, A/C	1
2	20177	(004937-006348)	Screw, Hex, .38-16 X 4.00, 5	1
3	59156	(004937-006348)	Nut, Hex, Lock, .38-16, Nl, Ss	1
4	73717	(004937-006348)	Arm, Tension, A/C, .18 1.3w 4.2l	1
5	76570	(004937-006348)	Screw, Hex, M8 X 1.25 X 30, 8.8	2
6	32491	(004937-006348)	Washer, Flat, 0.31 Std	4
7	08709	(004937-006348)	Nut, Hex, Lock, M8 X 1.25, Nl	2
8	16931	(004937-006348)	Screw, Hex, M8 X 1.25 X 20, 8.8	4
9	64899	(004937-006348)	Belt, V, [3v] 40.0l, 1only [Hc38]	1
10	1007343	(004937-006348)	Bracket, Belt, Guard, A/C	1
11	1019513	(004937-006999)	Plate, Shield, Heat	1
12	1008513	(004937-006999)	Angle, Heat, Shield	1
13	39311	(004937-006999)	Nut, Hex, Std, M08 X 1.25	2
14	393201	(004937-006999)	Sheave, Aux, [Hc38], 1Grv 6.8od [Gm 3.0L]	1
15	39670	(004937-006999)	Screw, Hex, .38-24 X 1.50, 5	3
16	392613	(004937-006348)	Bracket Wldt, Mtg, A/C	1
17	75828	(004937-006999)	Alternator, 12vdc, 100A [Brushless]	1
18	77555	(004937-006999)	Sheave, [3L], 1Grv, 03.5Pd 0.67B	1
19	31525	(004937-006999)	Wire, 10ga 16.0l Blk .38ring /.25ring	1
20	371509	(004937-006999)	Washer, Lock, .38	1
21	39277	(004937-006999)	Screw, Hex, M8 X 1.25 X 25, 8.8	1
22	393244	(004937-006999)	Belt, V, [Hc41] 42.0l	1
23	1008512	(004937-006999)	Bushing, Sleeve, .40b X .50d X 1.06l	1
24	34877	(004937-006999)	Screw, Hex, M10 X 1.5 X 100, 8.8	1
25	07792	(004937-006999)	Nut, Hex, Flng, M10 X 1.5	1
26	41186	(004937-006999)	Washer, Belleville, .31	1
27	1008538	(004937-006999)	Bracket, Guard, Alternator, Hd [Gm3.0l]	1
28	21237	(004937-006999)	Screw, Hex, M4 X 0.7 X 6, 8.8	1
29	32978	(004937-006999)	Washer, Lock, Int, #08	1
30	1008510	(004937-006999)	Bracket, Mtg, Alternator, Hd,[Gm3.0l]	1
31	35756	(004937-006999)	Tube, 01.00d 00.50b 01.0l Stl Pnt	2
32	32492	(004937-006999)	Washer, Flat, 0.38 Std	4
33	27991	(004937-006999)	Screw, Hex, .38-16 X 2.25, 5	2
34	1008519	(004937-006999)	Arm, Alternator, Hd [Gm3.0l]	1
35	50902	(004937-006999)	Nut, Hex, Lock, .38-16, Nl	2
36	04375	(004937-006999)	Screw, Hex, M 8 X 1.25 X 40, Fl	1
37	32492	(004937-006348)	Washer, Flat, 0.38 Std	6
38	06537	(004937-006999)	Screw, Hex, M10 X 1.5 X 120, 8.8, Fl	2
39	1017085	(006349-006999)	Bracket Wldt, Mtg, A/C	1
40	1017102	(006349-006999)	Arm, Tens	2
41	1017292	(006349-006999)	Tube, 00.75d 00.41b 03.3l Stl Pl	2
42	1017515	(006349-006999)	Guard, Belt, A/C	1
43	07819	(006349-006999)	Screw, Hex, M10 X 1.5 X 130, 8.8	2
44	08714	(006349-006999)	Nut, Hex, Lock, M10 X 1.5, Nl, Ss	2

353878 - G, LP

Fig. 39 - Cab AC Compressor Group, GM (004937-006999)

NOTE: AC/Heater kit, TENNANT Part Number 374287 for machines serial number 006999 and below and includes Fig. 36, Fig. 38, and .Fig. 39

Ref.	Part No.	Serial Number	Description	Qty.
45	39283	(006349-006999)	Screw, Hex, M10 X 1.5 X 25, 8.8	2
46	32485	(006349-006999)	Washer, Flat, 0.38 Sae	6
47	41430	(006349-006999)	Nut, Hex, Lock, M10 X 1.5, Nl	2
48	32491	(006349-006999)	Washer, Flat, 0.31 Std	4
49	16931	(006349-006999)	Screw, Hex, M8 X 1.25 X 20, 8.8	4
50	380544	(006349-006999)	Belt, V, [3v] 38.5l [Hc38/41]	1

Fig. 40 - Cab AC Compressor Group, GM (007000-)

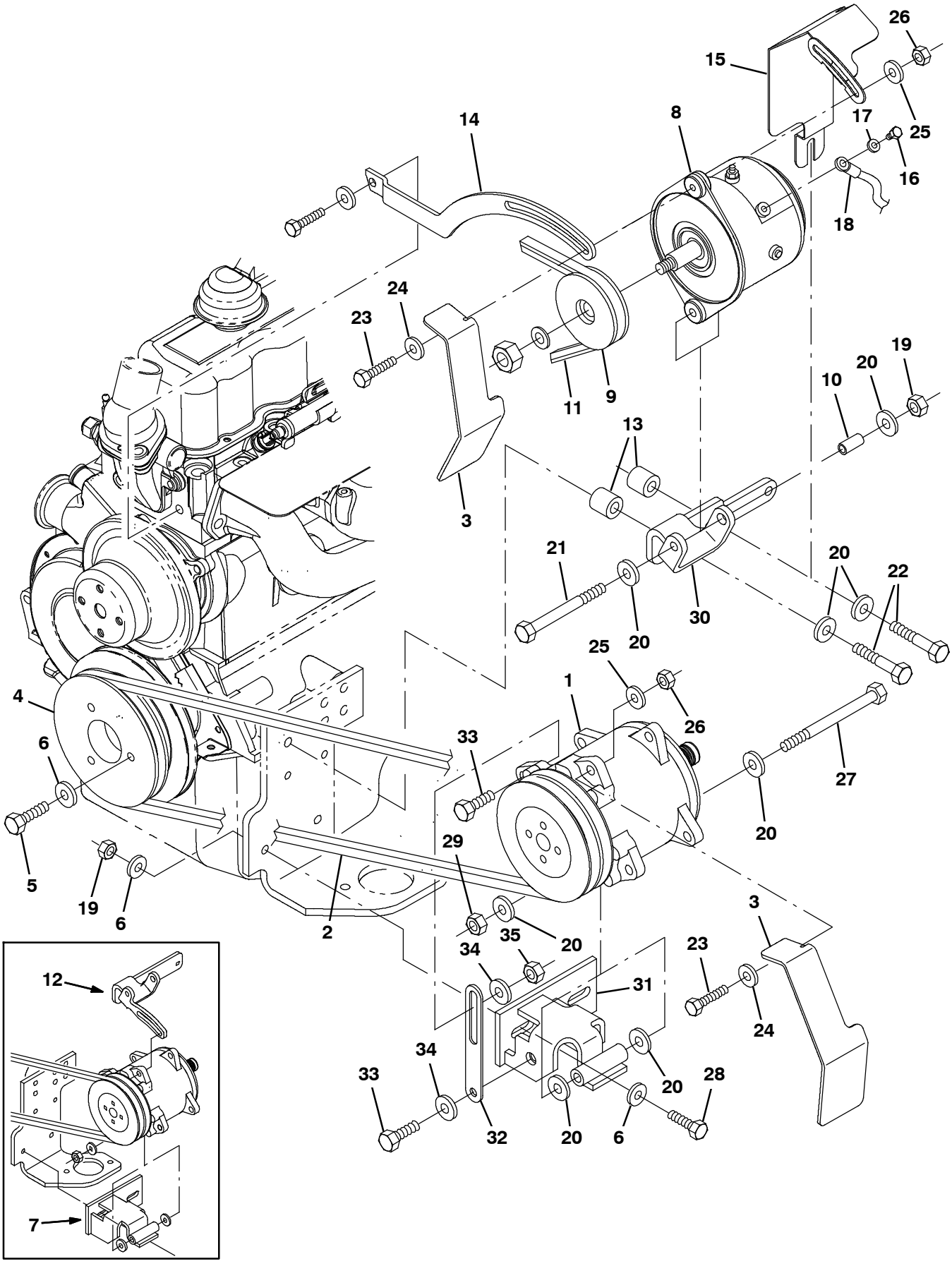

353878 - G, LP

Fig. 40 - Cab AC Compressor Group, GM (007000-)

NOTE: AC/Heater kit, TENNANT Part Number 900299 for machines serial number 007000- 008088 includes Fig. 36, Fig. 38, and .Fig. 40

NOTE: AC/Heater kit, TENNANT Part Number 9012894 for machines serial number 008089 and above and includes Fig. 37, Fig. 38, and .Fig. 40

Ref.	Part No.	Serial Number	Description	Qty.
1	1030582	(007000-)	Compressor, A/C [2007]	1
2	380544	(007000-)	Belt, V, 38.5l [Hc38]	1
3	1030762	(007000-)	Bracket, Guard, Alternator, Hd [800/810]	2
4	393201	(007000-)	Sheave, Aux, 1grv, 06.8od [Gm3.0l, Hc38]	1
5	39670	(007000-)	Screw, Hex, .38- 24 X 1.50, G5	3
6	32492	(007000-)	Washer, Flat, 0.38, Std	7
7	1030657	(007000- 007367)	Bracket Wldt, Mtg, A/C [800 07]	1
8	1030627	(007000-)	Alternator, Se [800/810, 07]	1
9	77555	(007000-)	Sheave, 01grv, 03.5pd 0.67b [3l]	1
10	371526	(007000-)	Sleeve, Alternator	1
11	78772	(007000-)	Belt, V, 45.1l [Hc38]	1
12	1030654	(007000- 007367)	Bracket, Mtg, Alternator, Hd[800/810 07]	1
13	35756	(007000-)	Tube, 0.50id 1.00od 01.0l, Stl, Pntd	2
14	1030708	(007000-)	Arm, Adj, Alternator, Hd [800/810 07]	1
15	1032904	(007000-)	Shield, Heat, Alternator, Hd[800/810 07]	1
16	21237	(007000-)	Screw, Hex, M4 X 0.7 X 6, 8.8	1
17	32978	(007000-)	Washer, Lock, Int, #08	1
18	31525	(007000-)	Wire, 10ga 16.0l Blk .25ring /.38ring	1
19	50902	(007000-)	Nut, Hex, Lock, .38- 16, Nl	3
20	32485	(007000-)	Washer, Flat, 0.38, Sae	8
21	20177	(007000-)	Screw, Hex, .38- 16 X 4.00, G5	1
22	27992	(007000-)	Screw, Hex, .38- 16 X 2.50, G5	2
23	04375	(007000-)	Screw, Hex, M8 X 1.25 X 40, 8.8, Fl	2
24	41186	(007000-)	Washer, Flat, Belleville, .31	2
25	32491	(007000-)	Washer, Flat, 0.31, Std	2
26	08709	(007000-)	Nut, Hex, Lock, M8 X 1.25, Nl	2
27	06966	(007000-)	Screw, Hex, M10 X 1.5 X 110, 8.8	1
28	21198	(007000-)	Screw, Hex, .38- 16 X 1.25, G5	2
29	08714	(007000-)	Nut, Hex, Lock, M10 X 1.5, Nl, Ss	1
30	1051245	(007368-)	Bracket, Mtg, Alternator, Hd[800/810 07]	1
31	1050610	(007368-)	Bracket Wldt, Mtg, A/C [800 07]	1
32	1050584	(007368-)	Arm, Tens [2008]	1
33	39283	(007368-)	Screw, Hex, M10 X 1.50 X 25, 8.8	2
34	32485	(007368-)	Washer, Flat, 0.38, Sae	2
35	41430	(007368-)	Nut, Hex, Lock, M10 X 1.5, Nl	1

Fig. 41 - Cab Heater Box Group, Ford

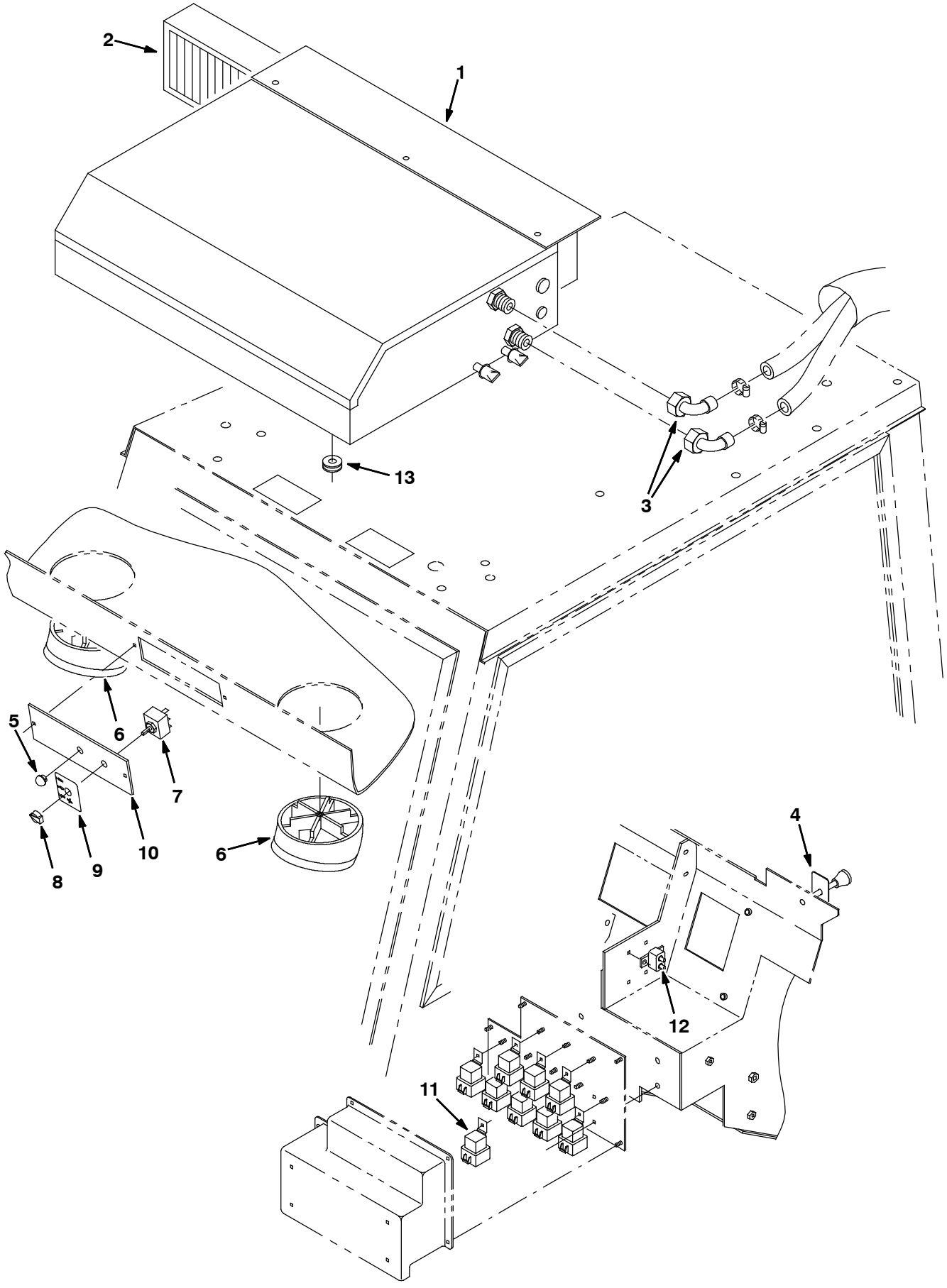

354068 - G, LP

Fig. 41 - Cab Heater Box Group, Ford

NOTE: Heater kit, TENNANT Part Number 380610 includes Fig. 41, and Fig. 42.

	Ref.	Part No.	Serial Number	Description	Qty.
▽		380612	(004000- 004936)	Heater & A/C, W/ Fan, Roof	1
▲	1	380614	(004000- 004936)	Box Assy, Heater, A/C (See Breakdowns)	1
▲	2	380689	(004000- 004936)	Filter, Panel, Heat- A/C	1
▲	3	380615	(004000- 004936)	Fitting, Elbow	2
▲	4	380663	(004000- 004936)	Label, Opertnl, Pull Heat	1
▲	5	56992	(004000- 004936)	Button, Plug, 0.50h .03- .12 [Black Nyl]	1
▲	6	380617	(004000- 004936)	Louver, Adj, Heat- A/C	2
▲	7	380619	(004000- 004936)	Switch, 3 Pos, Blower, Heat	1
▲	8	380661	(004000- 004936)	Knob, Rnd, Control, Heat- A/C	1
▲	9	380662	(004000- 004936)	Label, Opertnl, Fan, Hi/Med/Low	1
▲	10	380690	(004000- 004936)	Plate, Mtg, Switch, A/C	1
	11	56186	(004000- 004936)	Relay, 12vdc, 40a, Spdt N/O	1
	12	374210	(004000- 004936)	Circuitbreaker, 20.0a, Thermal	1
	13	77811	(004000- 004936)	Grommet, Cab, Harness, Wire	1

Fig. 42 - Cab Heater Hose Group, Ford

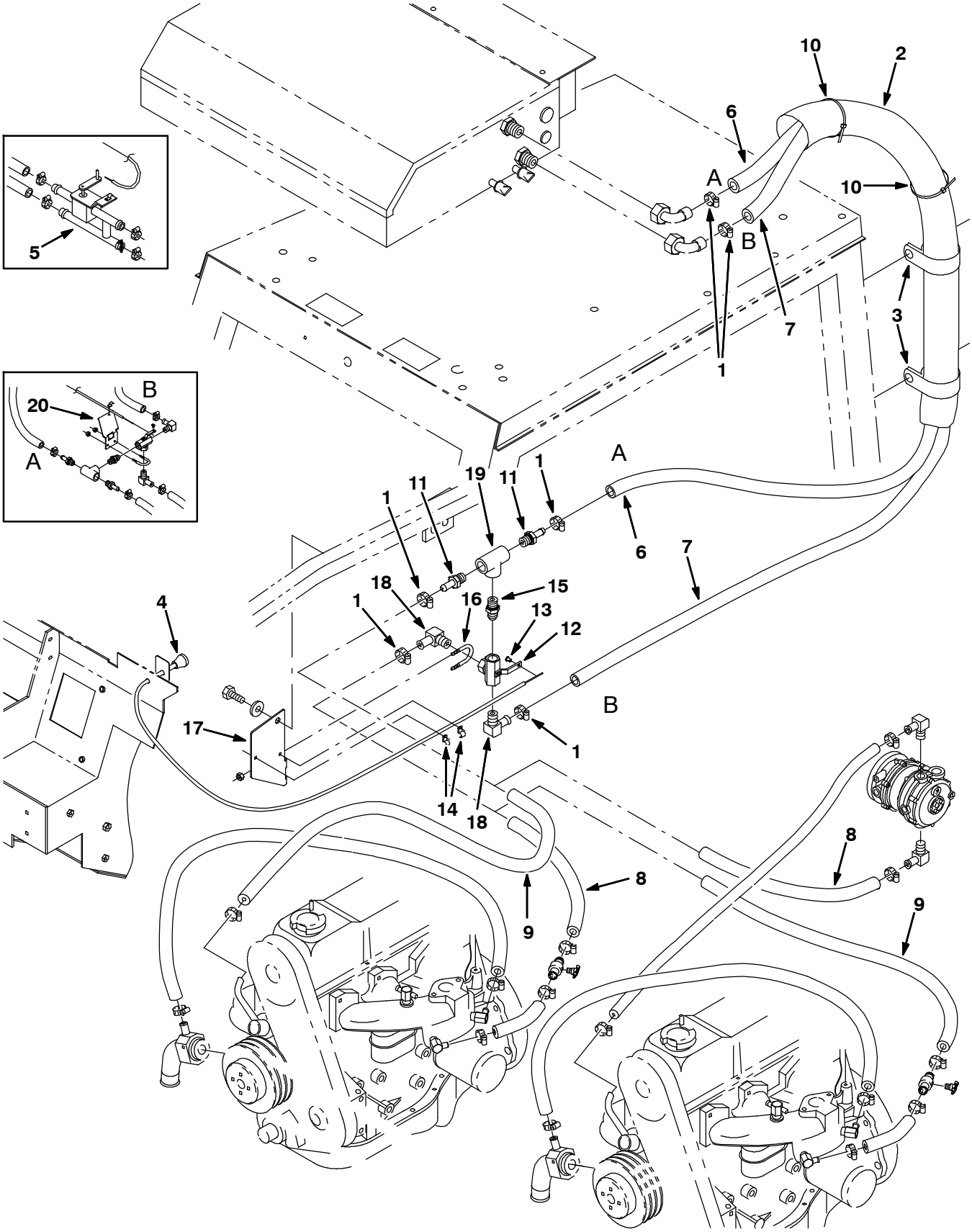

354069 - G, LP

Fig. 42 - Cab Heater Hose Group, Ford

NOTE: Heater kit, TENNANT Part Number 380610 includes Fig. 41, and Fig. 42.

	Ref.	Part No.	Serial Number	Description	Qty.
	1	63810	(004000- 004936)	Clamp, Hose, Wormdrive, 0.56- 1.06d	6
	2	375512	(004000- 004936)	Sleeve, Nyl, #33 65.0l	1
	3	41016	(004000- 004936)	Clamp, Cable, Stl, 2.25d X 1.00w, 1h	2
	4	43558A	(004000- 004936)	Cable, Cntrl, Choke, 85/90l 1.4d Knob	1
	5	380618	(004000- 004374)	Valve, Water, Heater, H, 10bm	1
	6	380621	(004000- 004936)	Hose, Heater, 0.62id 80.0l	1
	7	380620	(004000- 004936)	Hose, Heater, 0.62id 77.0l	1
	8	72979	(004000- 004718)	Hose, Heater, 0.62id 20.0l	1
	8	61870	(004719- 004936)	Hose, Heater, 0.62id 31.0l	1
	9	72978	(004000- 004718)	Hose, Heater, 0.62id 13.0l	1
	9	61869	(004719- 004936)	Hose, Heater, 0.62id 24.0l	1
	10	763116	(004000- 004936)	Tie, Cable, Nyl, 15.3l . W 4.5 Max D	3
▽		375728	(004375- 004936)	Valve Assy, Ball, 3 Way, Em10/Em10/Em10	1
▲	11	59901	(004375- 004936)	Fitting, Brs, Str, Em10/Pm08	2
▲	12	31507	(004375- 004936)	Valve, Ball, 3- way, 08pf/08pf/08pf Brs	1
▲	13	43242	(004375- 004936)	Swivel	1
▲	14	1043352	(004375- 004936)	Clamp, Cable, Stl, 0.18d X 0.75w, 1hole	2
▲	15	40573	(004375- 004936)	Fitting, Hyd, Str, Pm08/Pm08	1
▲	16	45142	(004375- 004936)	Bolt, U, .25- 20 X 2.00, 1.10id	1
▲	17	374129	(004719- 004936)	Bracket, Mtg, Valve, Cntrl, Heater	1
▲	18	30268	(004375- 004936)	Fitting, Brs, E90, Em10/Pm08	2
▲	19	24450	(004375- 004936)	Fitting, Brs, Tee, Pf08/Pf08/Pf08	1
	20	375726	(004375- 004718)	Bracket, Mtg, Valve,Control, Heater	1

Fig. 43 - Cab Heater Box Group, GM (004937 - 008088)

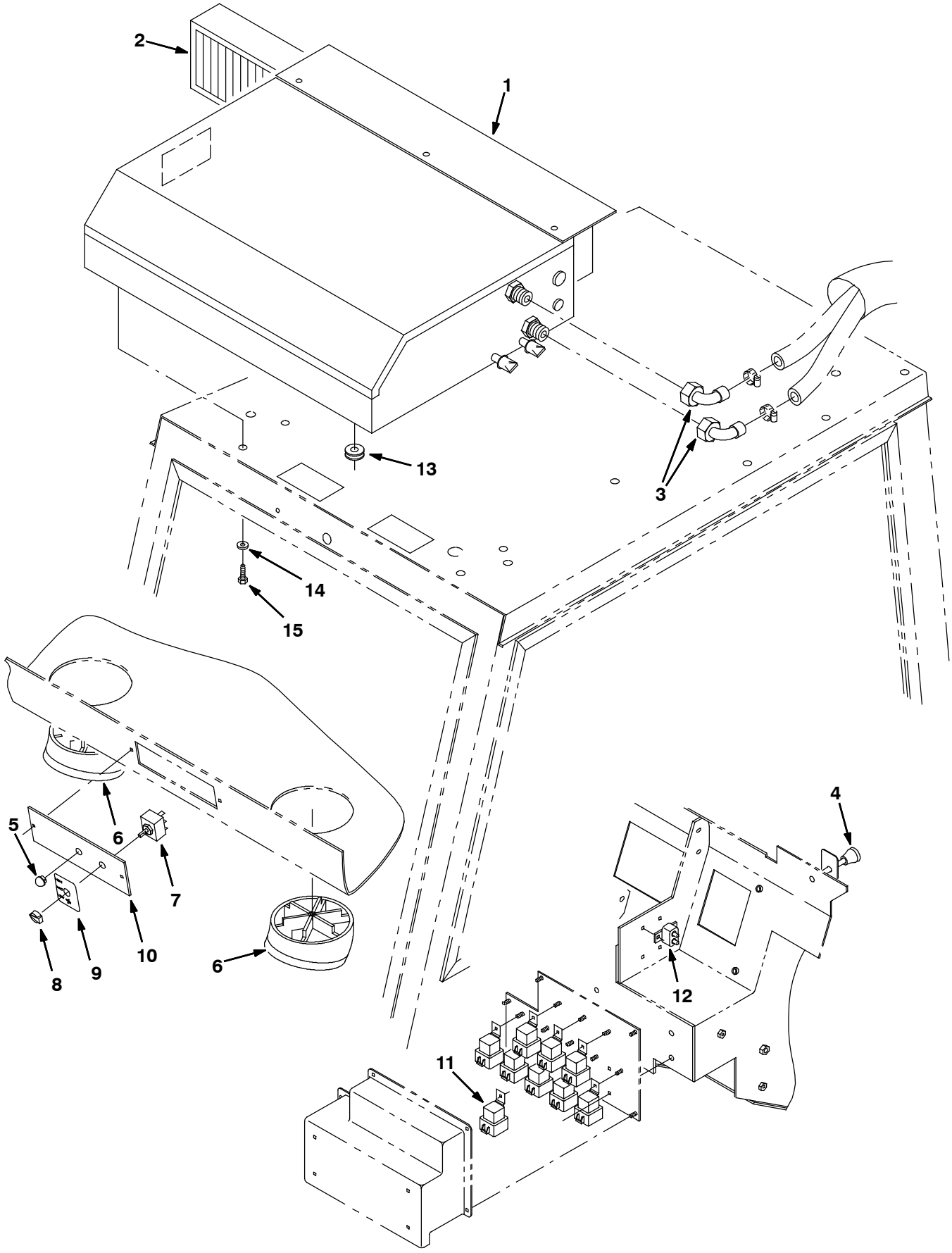

354068 - G, LP

Fig. 43 - Cab Heater Box Group, GM (004937-008088)

NOTE: Heater kit, TENNANT Part Number 374285 for machines serial number 004937-008088 includes Fig. 43, and Fig. 45.

	Ref.	Part No.	Serial Number	Description	Qty.
▽		380612	(004937-008088)	Heater & A/C, W/ Fan, Roof	1
▲	1	380614	(004937-008088)	Box Assy, Heater, A/C (See Breakdowns)	1
▲	2	380689	(004937-008088)	Filter, Panel, Heat-A/C	1
▲	3	380615	(004937-008088)	Fitting, Elbow	2
▲	4	380663	(004937-008088)	Label, Opertnl, Pull Heat	1
▲	5	56992	(004937-008088)	Button, Plug, 0.50h .03-.12 [Black Nyl]	1
▲	6	380617	(004937-008088)	Louver, Adj, Heat-A/C	2
▲	7	380619	(004937-008088)	Switch, 3 Pos, Blower, Heat	1
▲	8	380661	(004937-008088)	Knob, Rnd, Control, Heat-A/C	1
▲	9	380662	(004937-008088)	Label, Opertnl, Fan, Hi/Med/Low	1
▲	10	380690	(004937-008088)	Plate, Mtg, Switch, A/C	1
	11	56186	(004937-008088)	Relay, 12vdc, 40a, Spdt N/O	1
	12	374210	(004937-008088)	Circuitbreaker, 20.0a, Thermal	1
	13	77811	(004937-008088)	Grommet, Cab, Harness, Wire	1
	14	32490	(004937-008088)	Washer, Flat, 0.25 Std	12
	15	12459	(004937-008088)	Screw, Hex, M6 X 1.0 X 20, Fmg	12

Fig. 44 - Cab Heater Box Group, GM (008089 -)

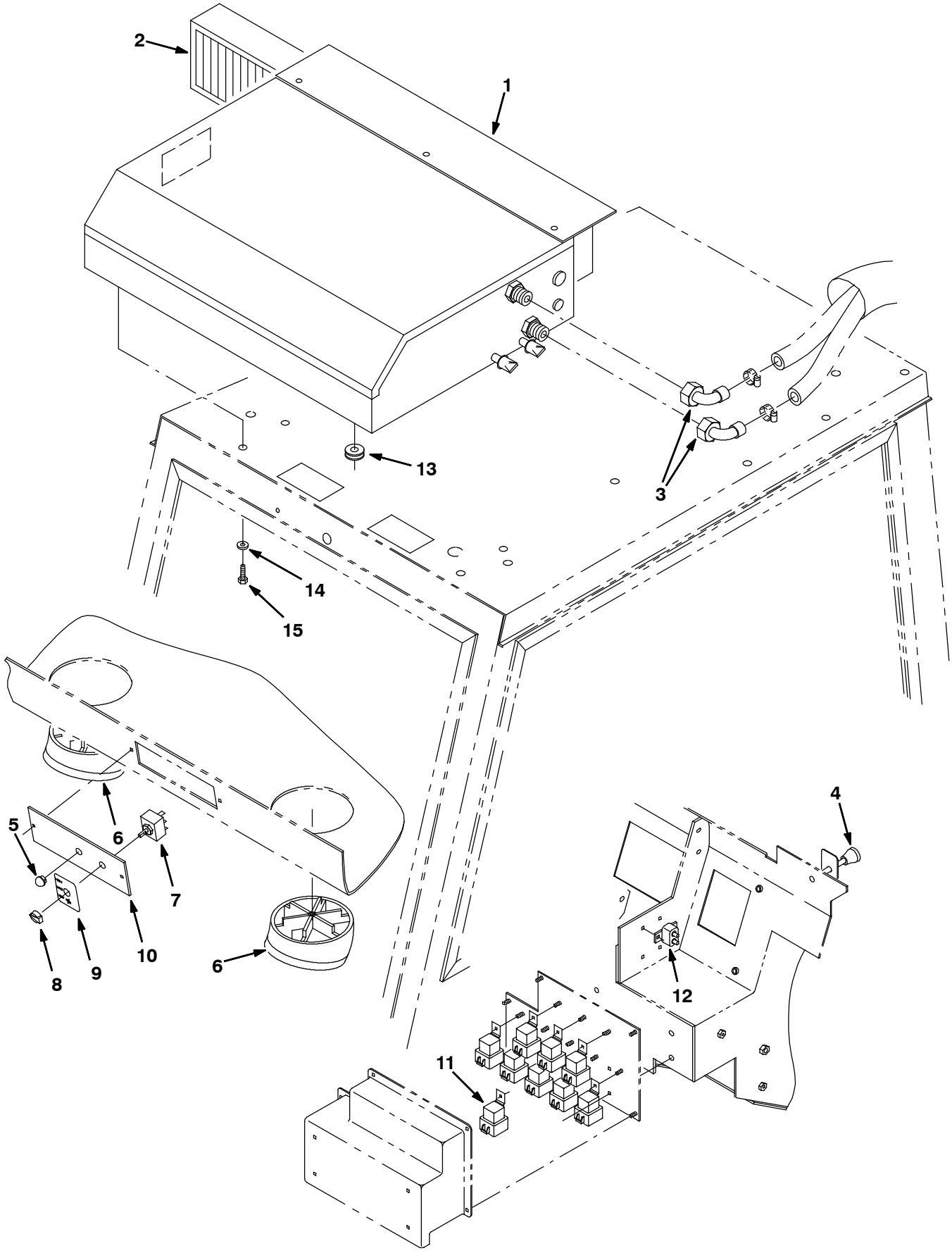

354068 - G, LP

Fig. 44 - Cab Heater Box Group, GM (008089 -)

NOTE: Heater kit, TENNANT Part Number 9012894 for machines serial number 08089 and above includes Fig. 44, and Fig. 45.

	Ref.	Part No.	Serial Number	Description	Qty.
▽		9012896	(008089-)	Heater / Pressrzr Assy, Roof [800 Gray]	1
▲	1	1073905	(008089-)	Heater [Badger, Gray] (See Breakdowns)	1
▲	2	380689	(008089-)	Filter, Panel, Heat- A/C	1
▲	3	380615	(008089-)	Fitting, Elbow	2
▲	4	380663	(008089-)	Label, Opertnl, Pull Heat	1
▲	5	56992	(008089-)	Button, Plug, 0.50h .03- .12 [Black Nyl]	1
▲	6	380617	(008089-)	Louver, Adj, Heat- A/C	2
▲	7	380619	(008089-)	Switch, 3 Pos, Blower, Heat	1
▲	8	380661	(008089-)	Knob, Rnd, Control, Heat- A/C	1
▲	9	380662	(008089-)	Label, Opertnl, Fan, Hi/Med/Low	1
▲	10	380690	(008089-)	Plate, Mtg, Switch, A/C	1
	11	56186	(008089-)	Relay, 12vdc, 40a, Spdt N/O	1
	12	374210	(008089-)	Circuitbreaker, 20.0a, Thermal	1
	13	77811	(008089-)	Grommet, Cab, Harness, Wire	1
	14	32490	(008089-)	Washer, Flat, 0.25 Std	12
	15	12459	(008089-)	Screw, Hex, M6 X 1.0 X 20, Fmg	12

Fig. 45 - Cab Heater Hose Group, GM

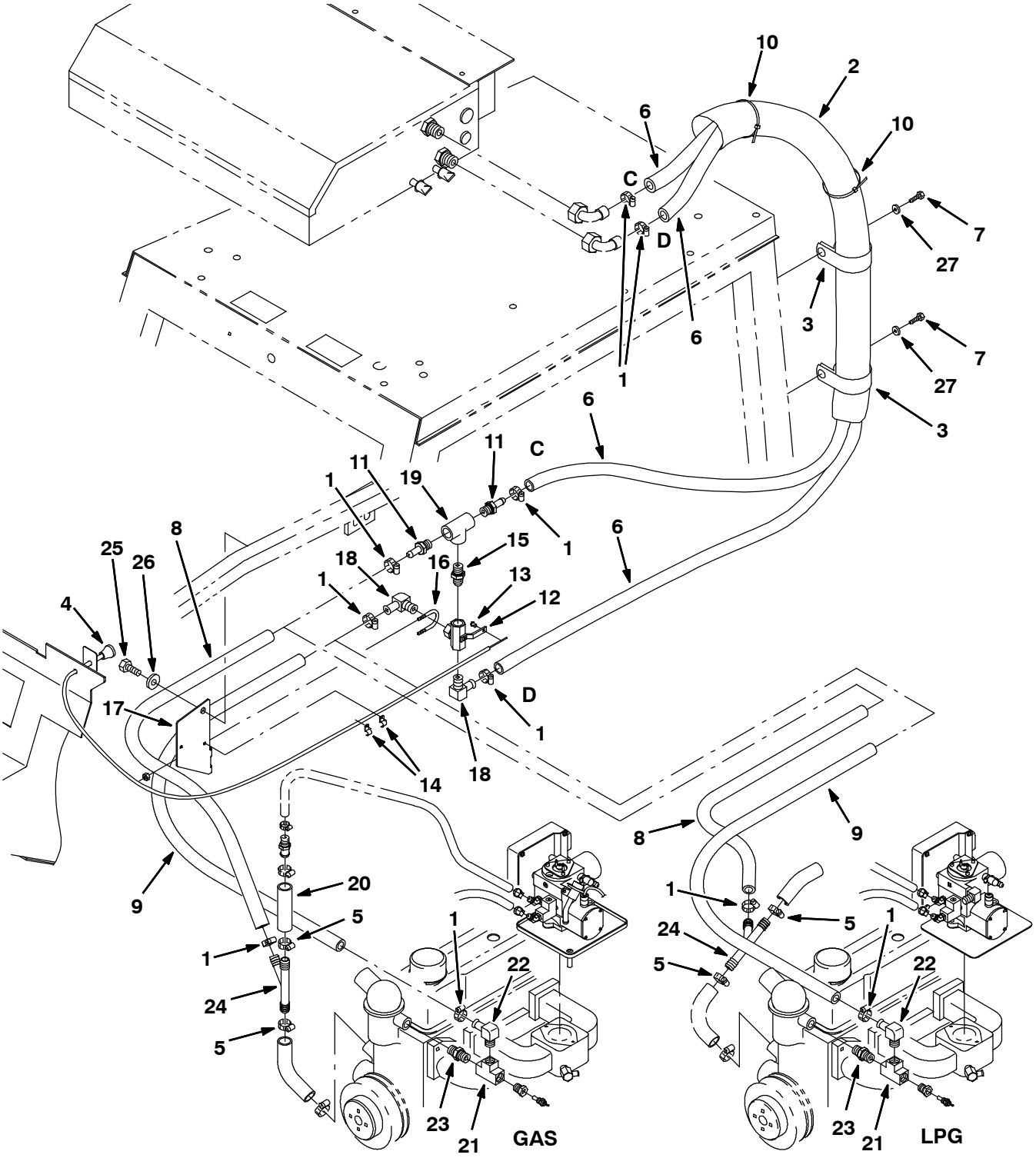

354067 - G, LP

Fig. 45 - Cab Heater Hose Group, GM

NOTE: Heater kit, TENNANT Part Number 374285 for machines serial number 004937- 008088 includes Fig. 43, and Fig. 45.

NOTE: Heater kit, TENNANT Part Number 9012894 for machines serial number 08089 and above includes Fig. 44, and Fig. 45.

	Ref.	Part No.	Serial Number	Description	Qty.
	1	63810	(004937-)	Clamp, Hose, Wormdrive, 0.56- 1.06d	8
	2	375512	(004937-)	Sleeve, Nyl, #33 65.0l	1
	3	41016	(004937-)	Clamp, Cable, Stl, 2.25d X 1.00w, 1h	1
	4	43558A	(004937-)	Cable, Cntrl, Choke, 85/90l 1.4d Knob	1
	5	11399	(004937-)	Clamp, Hose, Wormdrive, 0.81- 1.50d	2
	6	1016561	(004937-)	Hose, Afmkt, Rbr, Heater, 0.62id, 08ft	2
	7	12459	(004937-)	Screw, Hex, M6 X 1.0 X 20, Fmg	2
	8	1016556	(004937-)	Hose, Afmkt, Rbr, Heater, 0.62id, 03ft	1
	9	1016560	(004937-)	Hose, Afmkt, Rbr, Heater, 0.62id, 02ft	1
	10	763116	(004937-)	Tie, Cable, Nyl, 15.3l . W 4.5 Max D	3
▽		375728	(004937-)	Valve Assy, Ball, 3 Way, Em10/Em10/Em10	1
▲	11	59901	(004937-)	Fitting, Brs, Str, Em10/Pm08	2
▲	12	31507	(004937-)	Valve, Ball, 3- way, 08pf/08pf/08pf Brs	1
▲	13	43242	(004937-)	Swivel	1
▲	14	1043352	(004937-)	Clamp, Cable, Stl, 0.18d X 0.75w, 1hole	2
▲	15	40573	(004937-)	Fitting, Hyd, Str, Pm08/Pm08	1
▲	16	45142	(004937-)	Bolt, U, .25- 20 X 2.00, 1.10id	1
▲	17	374129	(004937-)	Bracket, Mtg, Valve, Cntrl, Heater	1
▲	18	30268	(004937-)	Fitting, Brs, E90, Em10/Pm08	2
▲	19	24450	(004937-)	Fitting, Brs, Tee, Pf08/Pf08/Pf08	1
	20	75197	(004937-)	Hose, Heater, 0.75id 04.0l	1
	21	24450	(004937-)	Fitting, Brass, Tee	1
	22	30268	(004937-)	Fitting, Brs, E90, Em10/Pm08	1
	23	40573	(004937-)	Fitting, Hyd, Str, Pm08/Pm08	1
	24	393255	(004937-)	Fitting, Plstc, Tee, Bm12/Bm12/Bm12	1
	25	16930	(004937-)	Screw, Hex, M10 X 1.5 X 50, 8.8	1
	26	32492	(004937-)	Washer, Flat, 0.38 Std	1
	27	32490	(004937-)	Washer, Flat, 0.25 Std	2

Fig. 46 - Alternator Group, SE, Ford

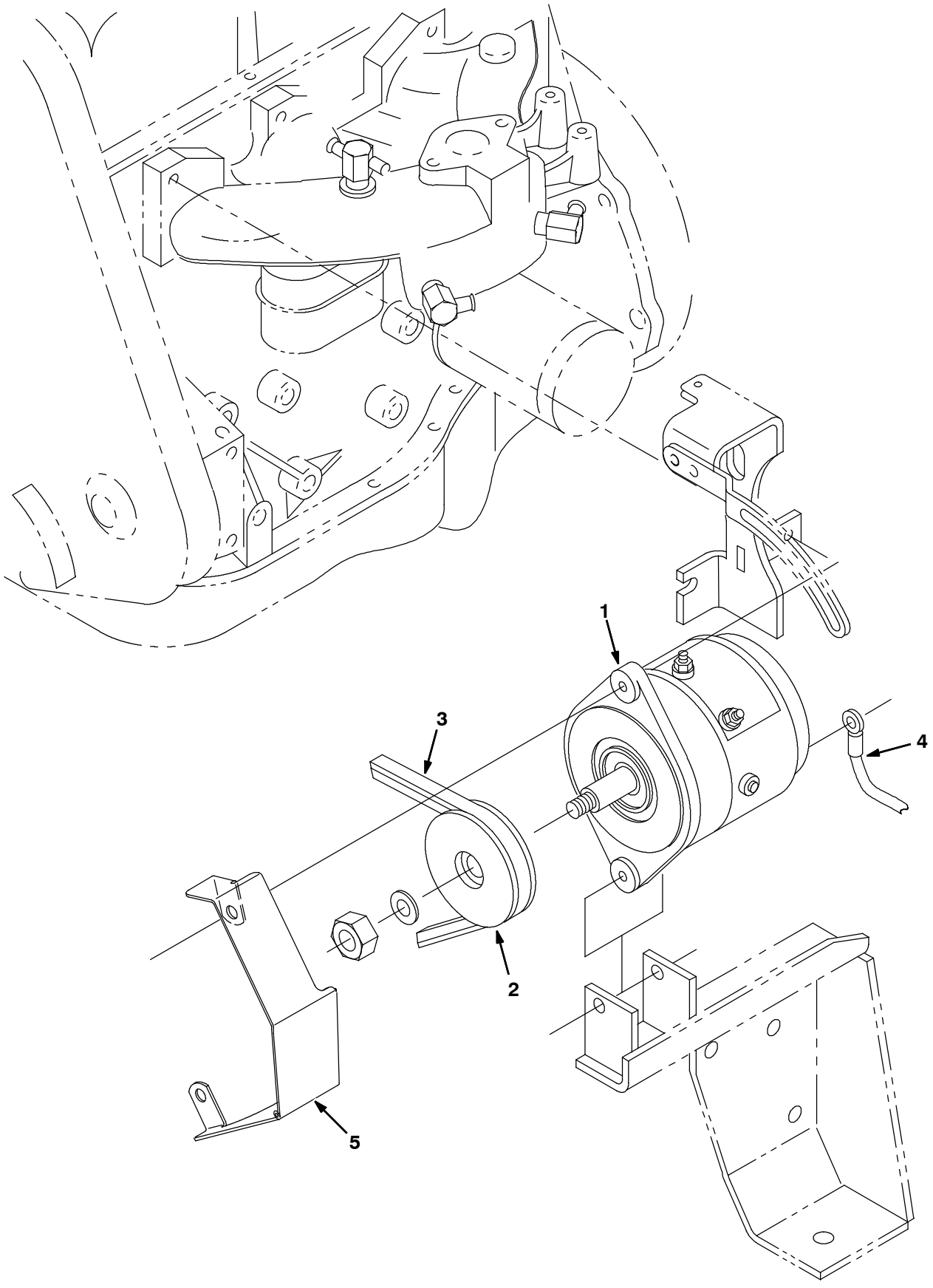

351151 - G, LP

Fig. 46 - Alternator Group, SE, Ford

	Ref.	Part No.	Serial Number	Description	Qty.
▽		380702	(004000- 004937)	Kit, Alternator, Hd, Gas/Lpg	1
▲	1	75828	(004000- 004937)	Alternator	1
▲	2	77555	(004000- 004937)	Sheave, Alternator, Se	1
▲	3	83641	(004000- 004937)	Belt, V	1
▲	4	31525	(004000- 004937)	Wire, Ground	1
▲	5	21223	(004000- 004937)	Guard, Alternator	1

Fig. 47 - Heavy Duty Alternator Kit, GM (004937-006999)

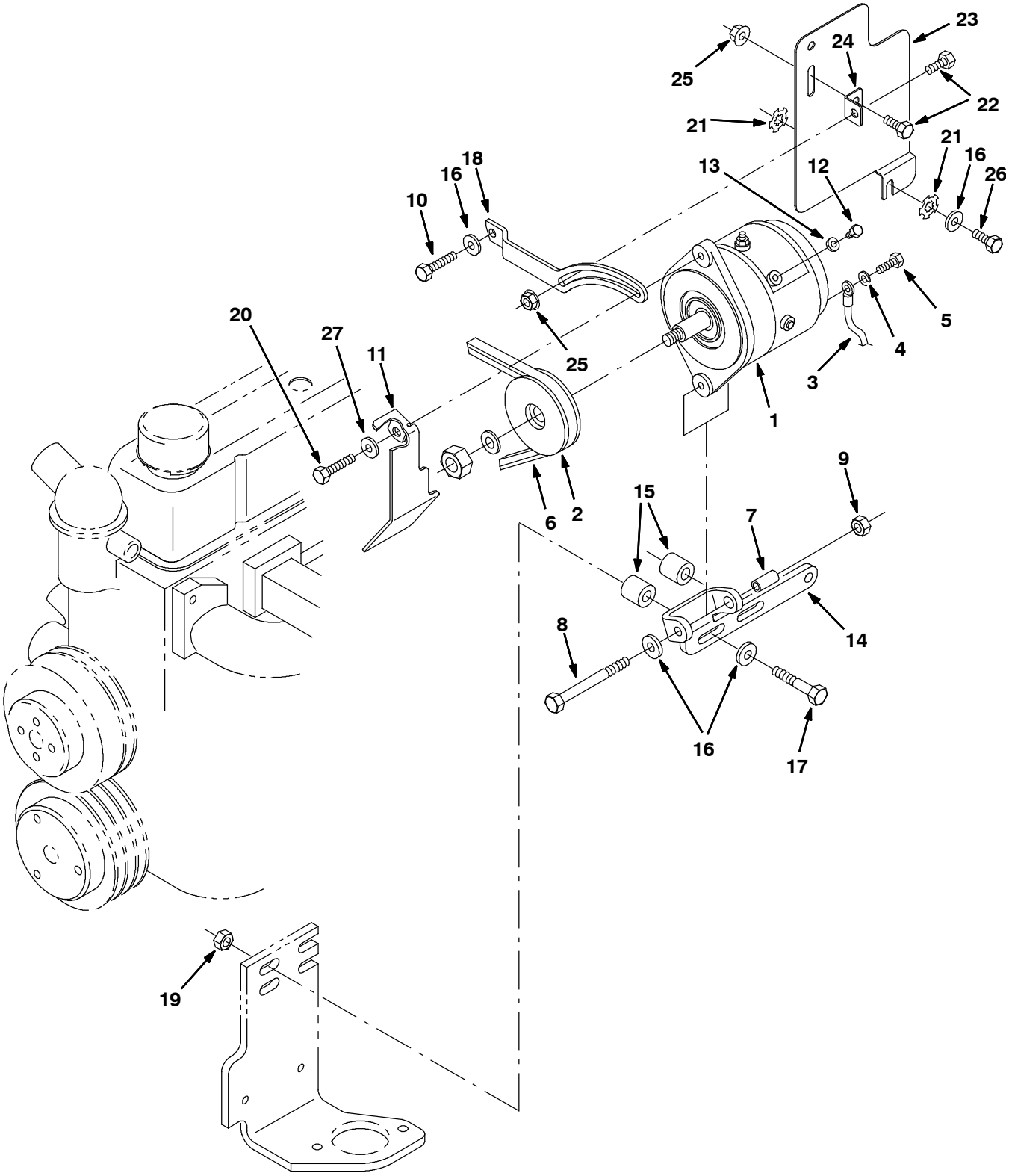

354061 - G, LP

Fig. 47 - Heavy Duty Alternator Kit, GM (004937-006999)

	Ref.	Part No.	Serial Number	Description	Qty.
▽		393241	(004937-006999)	Kit, Ci, Alternator, Hd,Gas/Lpg,[Gm3.0l]	1
▲	1	75828	(004937-006999)	Alternator, 12vdc, 100A [Brushless]	1
▲	2	77555	(004937-006999)	Sheave, [3L], 1Grv, 03.5Pd 0.67B	1
▲	3	31525	(004937-006999)	Wire, 10ga 16.0l Blk .38ring /.25ring	1
▲	4	371509	(004937-006999)	Washer, Lock, .38	1
▲	5	39277	(004937-006999)	Screw, Hex, M8 X 1.25 X 25, 8.8	1
▲	6	393244	(004937-006999)	Belt, V, [Hc41] 42.0l	1
▲	7	371526	(004937-006999)	Sleeve, Alternator	1
▲	8	20177	(004937-006999)	Screw, Hex, .38-16 X 4.00, 5	1
▲	9	50902	(004937-006999)	Nut, Hex, Lock, .38-16, Nl	1
▲	10	21195	(004937-006999)	Screw, Hex, .38-16 X 0.75, 5	1
▲	11	1008538	(004937-006999)	Bracket, Guard, Alternator, Hd [Gm3.0l]	1
▲	12	21237	(004937-006999)	Screw, Hex, M4 X 0.7 X 6, 8.8	1
▲	13	32978	(004937-006999)	Washer, Lock, Int, #08	1
▲	14	1008094	(004937-006999)	Bracket, Mtg, Alternator, Lower,[Gm3.0l]	1
▲	15	07274	(004937-006999)	Tube, 01.00d 00.44b 00.7l Stl Plt	2
▲	16	32485	(004937-006999)	Washer, Flat, .38 Sae	5
▲	17	27990	(004937-006999)	Screw, Hex, .38-16 X 2.25, 5	2
▲	18	1008519	(004937-006999)	Arm, Alternator, Hd [Gm3.0l]	1
▲	19	50902	(004937-006999)	Nut, Hex, Lock, .38-16, Nl	2
▲	20	39277	(004937-006999)	Screw, Hex, M8 X 1.25 X 25, 8.8	1
▲	21	41142	(004937-006999)	Washer, Lock, Int-ext, .38	2
▲	22	16735	(004937-006999)	Screw, Hex, M8 X 1.25 X 16, 8.8	2
▲	23	1019513	(004937-006999)	Plate, Shield, Heat	1
▲	24	1008513	(004937-006999)	Angle, Heat, Shield	1
▲	25	07791	(004937-006999)	Nut, Hex, Flng, M8 X 1.25	2
▲	26	21197	(004937-006999)	Screw, Hex, .38-16 X 1.00, 5	1
▲	27	41186	(004937-006999)	Washer, Belleville, .31	1

Fig. 48 - Heavy Duty Alternator Kit, GM (007000-)

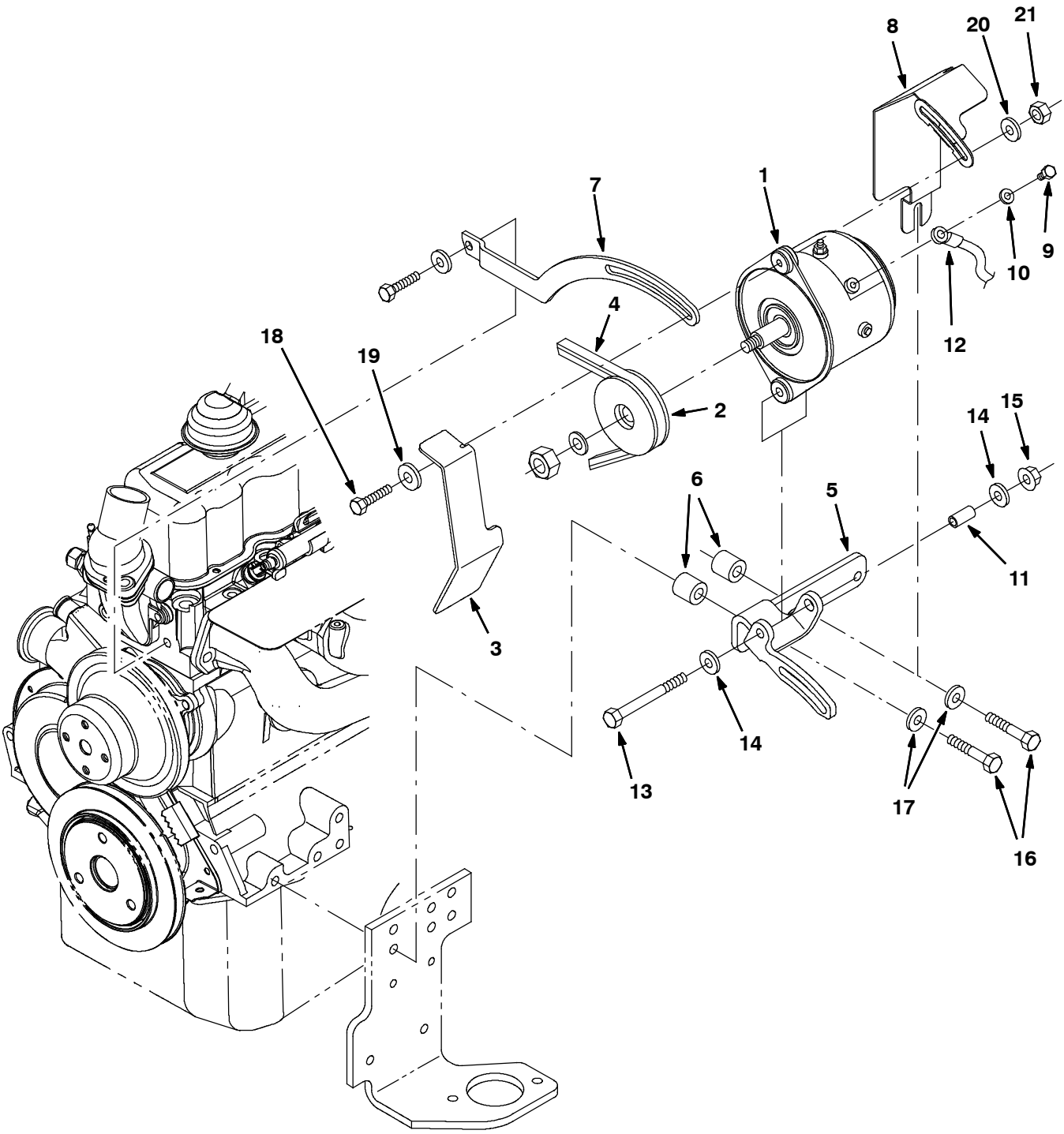

354061 - G, LP

Fig. 48 - Heavy Duty Alternator Kit, GM (007000-)

	Ref.	Part No.	Serial Number	Description	Qty.
▽		9002915	(007000-)	Alternator Kit, Hd, Gas/Lpg, Ci[800/810]	1
▲	1	1030627	(007000-)	Alternator, Se [800/810, 07]	1
▲	2	77555	(007000-)	Sheave, 01grv, 03.5pd 0.67b [3l]	1
▲	3	1030762	(007000-)	Bracket, Guard, Alternator, Hd [800/810]	1
▲	4	78772	(007000-)	Belt, V, 45.1l [Hc38]	1
▲	5	1030654	(007000-)	Bracket, Mtg, Alternator, Hd[800/810 07]	1
▲	6	35756	(007000-)	Tube, 0.50id 1.00od 01.0l, Stl, Pntd	2
▲	7	1030708	(007000-)	Arm, Adj, Alternator, Hd [800/810 07]	1
▲	8	1032904	(007000-)	Shield, Heat, Alternator, Hd[800/810 07]	1
▲	9	21237	(007000-)	Screw, Hex, M4 X 0.7 X 6, 8.8	1
▲	10	32978	(007000-)	Washer, Lock, Int, #08	1
▲	11	371526	(007000-)	Sleeve, Alternator	1
▲	12	31525	(007000-)	Wire, 10ga 16.0l Blk .25ring /.38ring	1
▲	13	20177	(007000-)	Screw, Hex, .38- 16 X 4.00, G5	1
▲	14	32495	(007000-)	Washer, Flat, 0.75, Std	2
▲	15	50902	(007000-)	Nut, Hex, Lock, .38- 16, Nl	1
▲	16	27992	(007000-)	Screw, Hex, .38- 16 X 2.50, G5	2
▲	17	32485	(007000-)	Washer, Flat, 0.38, Sae	2
▲	18	04375	(007000-)	Screw, Hex, M8 X 1.25 X 40, 8.8, Fl	1
▲	19	41186	(007000-)	Washer, Flat, Belleville, .31	1
▲	20	32491	(007000-)	Washer, Flat, 0.31, Std	1
▲	21	08709	(007000-)	Nut, Hex, Lock, M8 X 1.25, Nl	1

Fig. 49 - Vacuum Wand Kit (004000-008088)

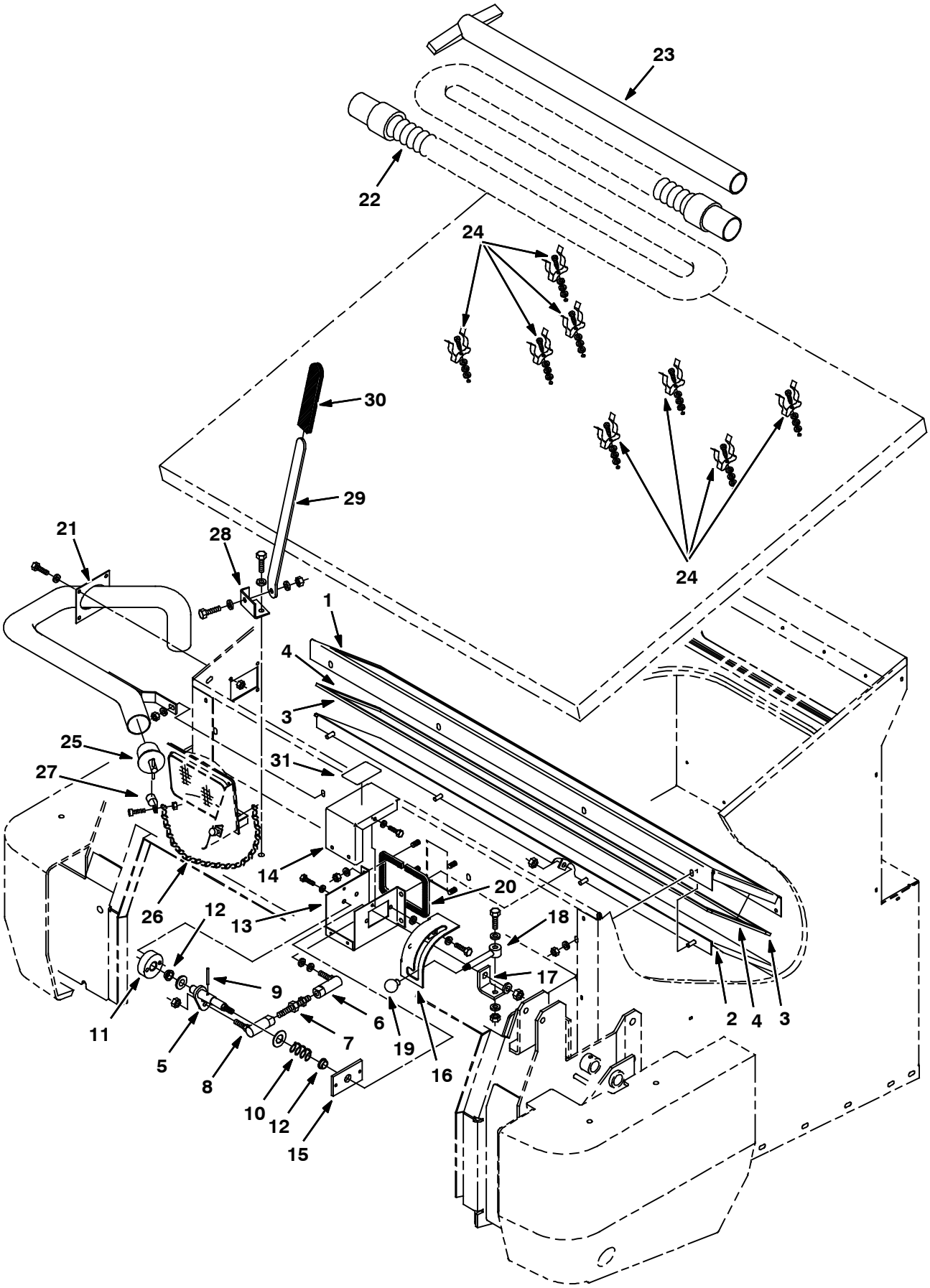

07672 - ALL

Fig. 49 - Vacuum Wand Kit (004000-008088)

	Ref.	Part No.	Serial Number	Description	Qty.
▽		70668	(004000-008088)	Wand Kit, Vac	1
▲	1	73871	(004000-008088)	Plate, Mounting, Vac Door	1
▲	2	75701	(004000-008088)	Plate Wldt, Vac Door	1
▲	3	75876	(004000-008088)	Seal, Foam Rbr, .19 .75W 47.1L	2
▲	4	75877	(004000-008088)	Seal, Foam Rbr .19 .75W 8.43L	2
▲	5	21047	(004000-008088)	Shaft	1
▲	6	82962	(004000-008088)	Balljoint .375-24 Lh	1
▲	7	11676	(004000-008088)	Stud, Adjustment	1
▲	8	51531	(004000-008088)	Ball Joint .375-24	1
▲	9	23146	(004000-008088)	Pin,Roll,.18Odx1.62L,.187/.192	1
▲	10	19035	(004000-008088)	Sprng,Comp,0.83Idx.07Wire 1.0L	1
▲	11	21041	(004000-008088)	Disk	1
▲	12	04843	(004000-008088)	Bearing, Flange .625 Bore	2
▲	13	21054	(004000-008088)	Box, Mounting, Lever, Vac	1
▲	14	21104	(004000-008088)	Panel, Cover	1
▲	15	73880	(004000-008088)	Plate	1
▲	16	79646	(004000-008088)	Plate, Latch	1
▲	17	79647	(004000-008088)	Angle	1
▲	18	79644	(004000-008088)	Handle	1
▲	19	26565	(004000-008088)	Knob,0.38-16,1.25Dia,Plastic	1
▲	20	79674	(004000-008088)	Seal	1
▲	21	74074	(004000-008088)	Adaptor Wldt, Vac Wand	1
▲	22	54009	(004000-008088)	Hose&2Cuff Assy,Vinyl2.0Id10Ft	1
▲	23	54012	(004000-008088)	Wand	1
▲	24	36158	(004000-008088)	Clip Finger Grip	8
▲	25	42124	(004000-008088)	Plug, Drain	1
▲	26	374012	(004000-008088)	Chain, Jack, #12, 08.5l 11 Links	1
▲	27	26395-2	(004000-008088)	Clamp-Cable, 0.38Dia 0.38Wth	1
▲	28	76286	(004000-008088)	Adaptor Wldt, Vac Wand	1
▲	29	76338	(004000-008088)	Bar, Prop	1
▲	30	70659	(004000-008088)	Grip, Handle, Flat	2
▲	31	76406	(004000-008088)	Label, Vac Wand	1

Fig. 50 - Vacuum Wand Kit (008089-)

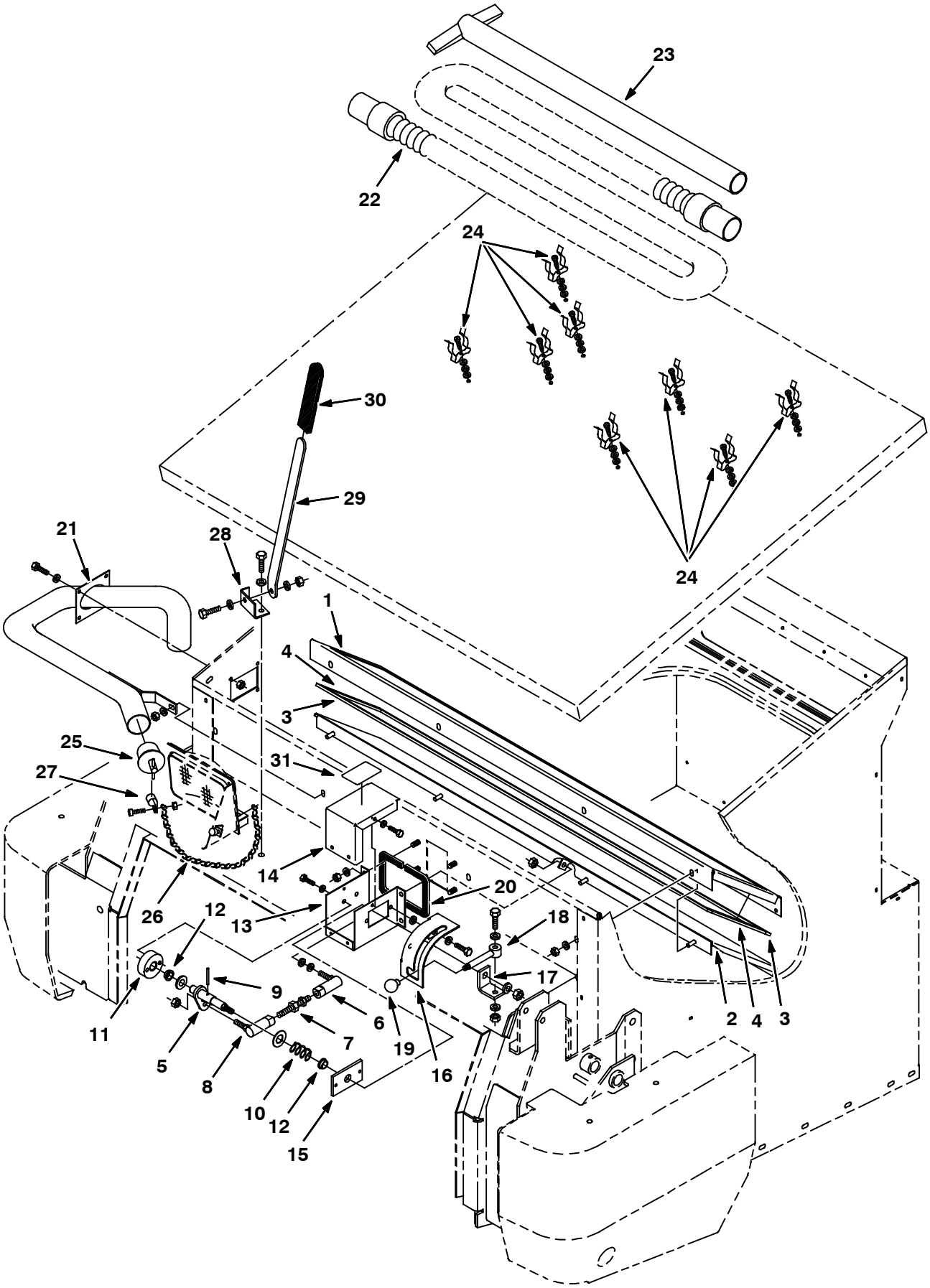

07672 - ALL

Fig. 50 - Vacuum Wand Kit (008089-)

	Ref.	Part No.	Serial Number	Description	Qty.
▽		9012878	(008089-)	Wand, Vacuum [800 Gray]	1
▲	1	73871	(008089-)	Plate, Mounting, Vac Door	1
▲	2	75701	(008089-)	Plate Wldt, Vac Door	1
▲	3	75876	(008089-)	Seal, Foam Rbr, .19 .75W 47.1L	2
▲	4	75877	(008089-)	Seal, Foam Rbr .19 .75W 8.43L	2
▲	5	21047	(008089-)	Shaft	1
▲	6	82962	(008089-)	Balljoint .375- 24 Lh	1
▲	7	11676	(008089-)	Stud, Adjustment	1
▲	8	51531	(008089-)	Ball Joint .375- 24	1
▲	9	23146	(008089-)	Pin,Roll,.18Odx1.62L,.187/.192	1
▲	10	19035	(008089-)	Sprng,Comp,0.83Idx.07Wire 1.0L	1
▲	11	21041	(008089-)	Disk	1
▲	12	04843	(008089-)	Bearing, Flange .625 Bore	2
▲	13	21054	(008089-)	Box, Mounting, Lever, Vac	1
▲	14	21104	(008089-)	Panel, Cover	1
▲	15	73880	(008089-)	Plate	1
▲	16	79646	(008089-)	Plate, Latch	1
▲	17	79647	(008089-)	Angle	1
▲	18	79644	(008089-)	Handle	1
▲	19	26565	(008089-)	Knob,0.38- 16,1.25Dia,Plastic	1
▲	20	79674	(008089-)	Seal	1
▲	21	74074	(008089-)	Adaptor Wldt, Vac Wand	1
▲	22	54009	(008089-)	Hose&2Cuff Assy,Vinyl2.0Id10Ft	1
▲	23	1073868	(008089-)	Wand Wldt [800 Gray]	1
▲	24	36158	(008089-)	Clip Finger Grip	8
▲	25	42124	(008089-)	Plug, Drain	1
▲	26	374012	(008089-)	Chain, Jack, #12, 08.5l 11 Links	1
▲	27	26395- 2	(008089-)	Clamp- Cable, 0.38Dia 0.38Wth	1
▲	28	76286	(008089-)	Adaptor Wldt, Vac Wand	1
▲	29	76338	(008089-)	Bar, Prop	1
▲	30	70659	(008089-)	Grip, Handle, Flat	2
▲	31	76406	(008089-)	Label, Vac Wand	1

Fig. 51 - Side Brush Dust Control Kit (004000-008088)

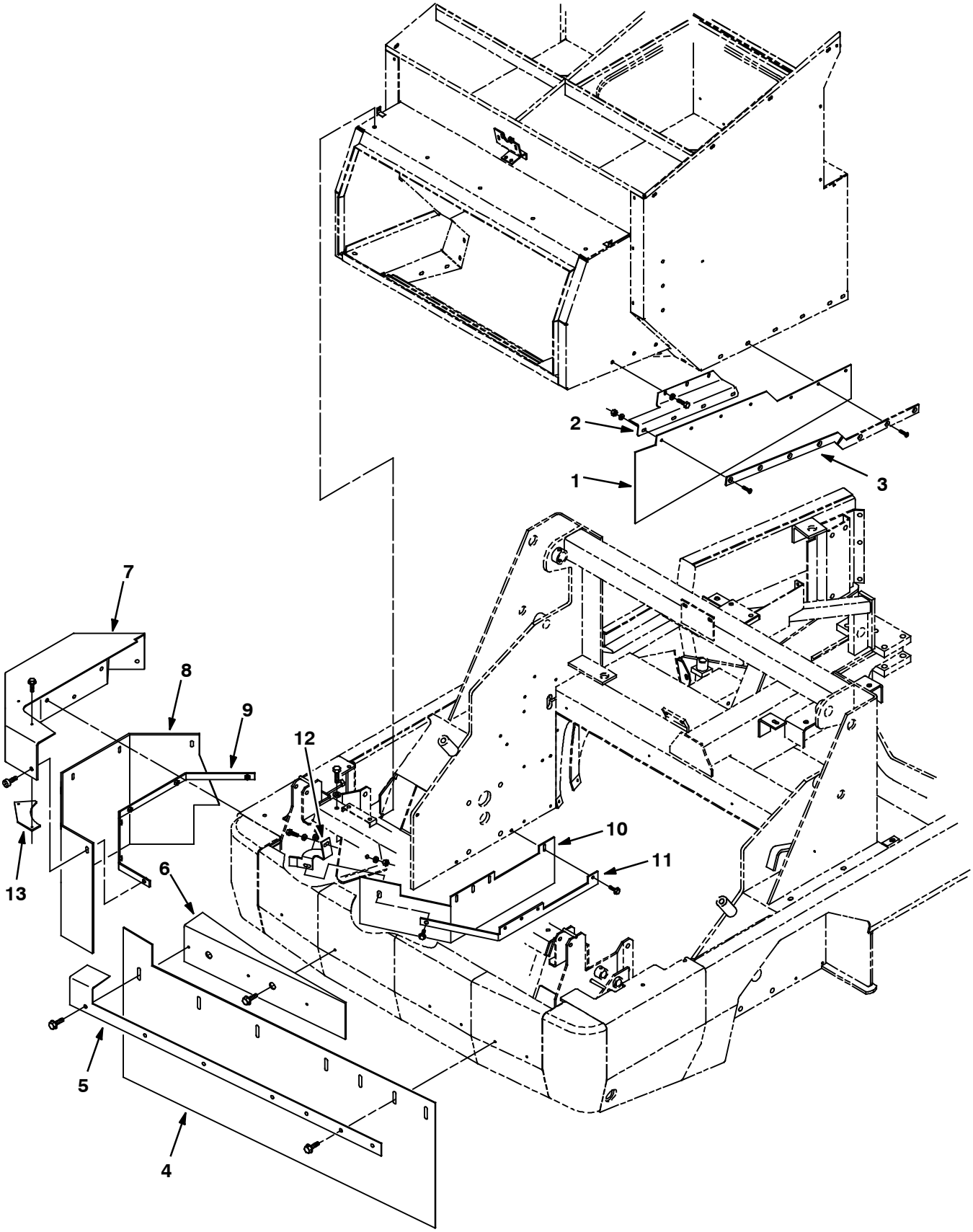

07678 - ALL

Fig. 51 - Side Brush Dust Control Kit (004000-008088)

	Ref.	Part No.	Serial Number	Description	Qty.
▽		76100	(004000-008088)	Dust Control Kit, Side Brush	1
▲	1	76036	(004000-008088)	Skirt, Deflection	1
▲	2	76030	(004000-008088)	Bracket, Mounting, Skirt	1
▲	3	76038	(004000-008088)	Strip, Retainer, Skirt	1
▲	4	75901	(004000-008088)	Skirt, Cover, Sbdc	1
▲	5	76049	(004000-008088)	Skirt, Retainer	1
▲	6	77759	(004000-008088)	Bracket Wldt	1
▲	7	75989	(004000-008088)	Plate Wldt, Skirt	1
▲	8	76069	(004000-008088)	Skirt, Cover, Sbdc	1
▲	9	76055	(004000-008088)	Plate, Retainer	1
▲	10	76074	(004000-008088)	Skirt	1
▲	11	76081	(004000-008088)	Skirt	1
▲	12	76084	(004000-008088)	Bracket	1
▲	13	77755	(004000-008088)	Plate	1

Fig. 52 - Side Brush Dust Control Kit (008089-)

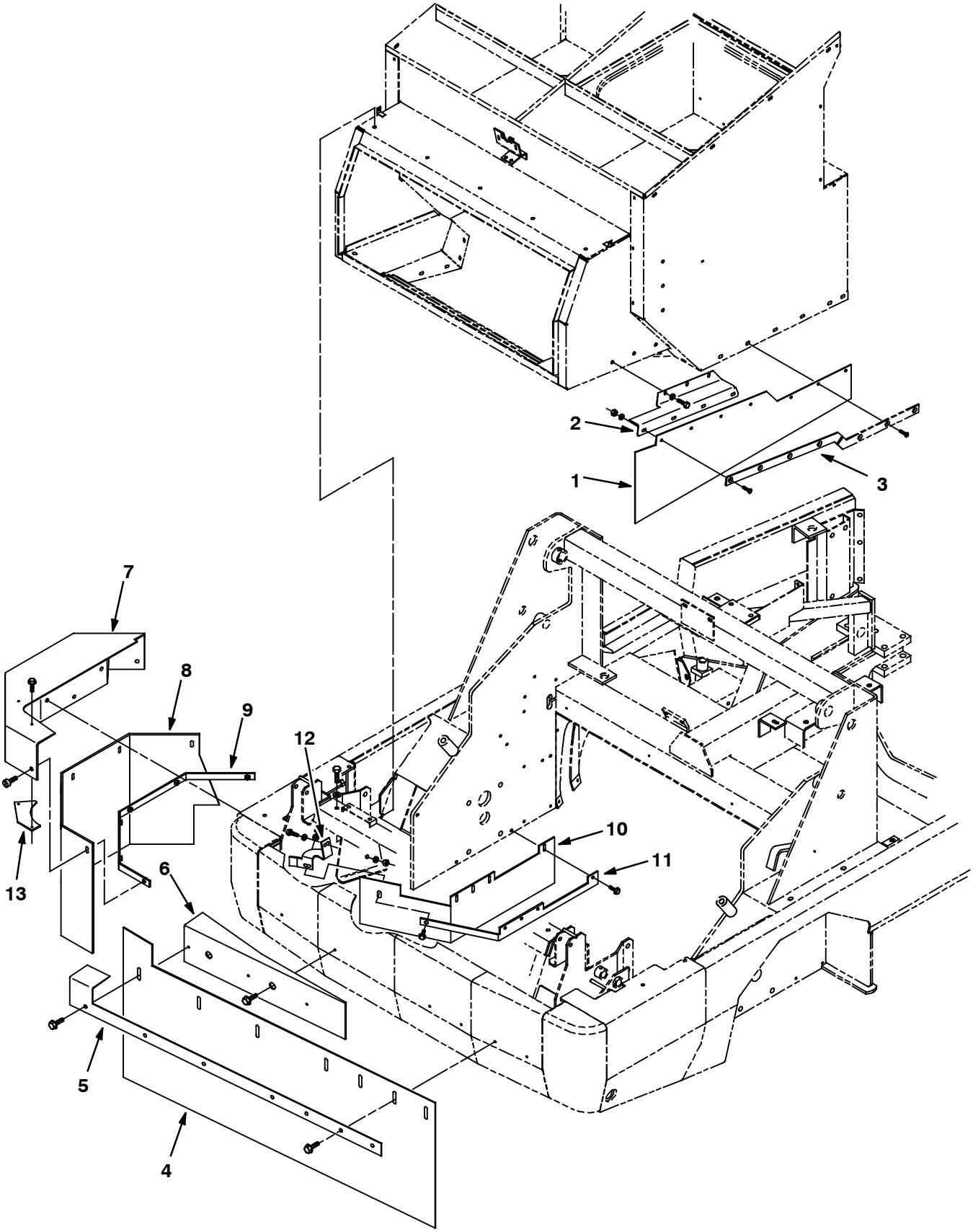

07678 - ALL

Fig. 52 - Side Brush Dust Control Kit (008089-)

	Ref.	Part No.	Serial Number	Description	Qty.
▽		9012889	(008089-)	Dust Cntrl Kit, Side Brush, Ci[800lgray]	1
▲	1	76036	(008089-)	Skirt, Deflection	1
▲	2	76030	(008089-)	Bracket, Mounting, Skirt	1
▲	3	76038	(008089-)	Strip, Retainer, Skirt	1
▲	4	75901	(008089-)	Skirt, Cover, Sbdc	1
▲	5	1074310	(008089-)	Retainer, Skirt, .12, 2.0w X 54.5l	1
▲	6	1073949	(008089-)	Bracket Wldt, Mtg, Skirt, Sbdc[800 Gray]	1
▲	7	1073926	(008089-)	Plate Wldt, Skirt [Gray]	1
▲	8	76069	(008089-)	Skirt, Cover, Sbdc	1
▲	9	76055	(008089-)	Plate, Retainer	1
▲	10	76074	(008089-)	Skirt	1
▲	11	76081	(008089-)	Skirt	1
▲	12	76084	(008089-)	Bracket	1
▲	13	1073948	(008089-)	Plate, Skirt, Sbdc [800 Gray]	1

Fig. 53 - Protectoseal Fuel Tank Cap Group

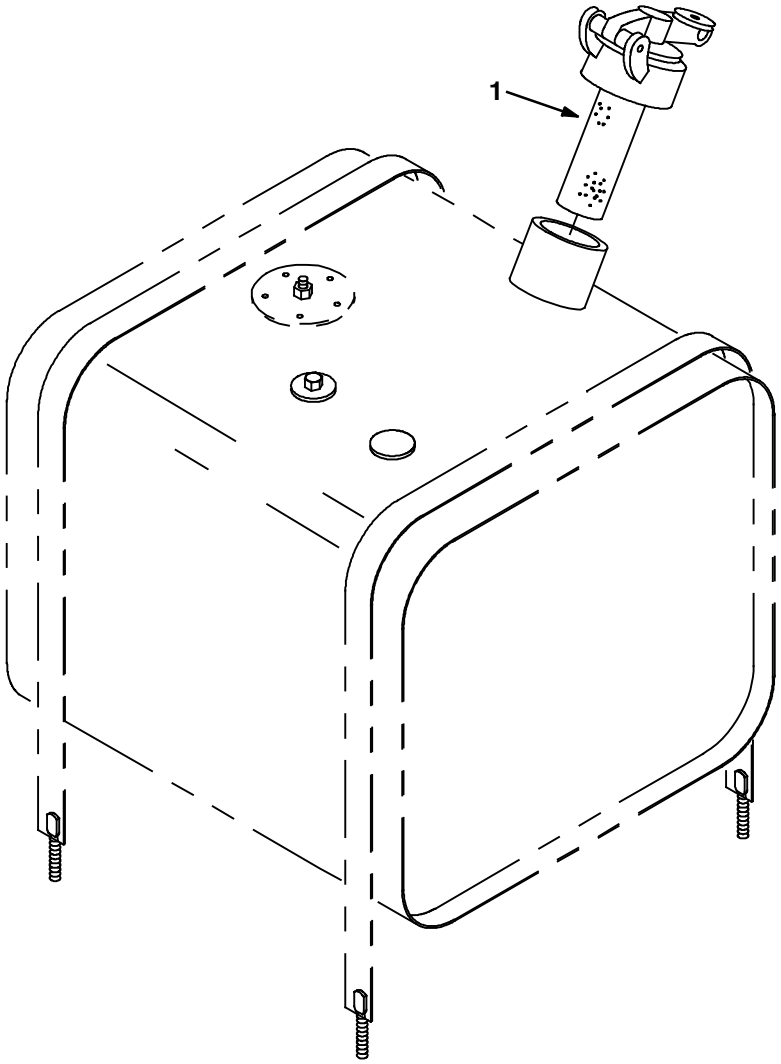

07471 - ALL

Ref.	Part No.	Serial Number	Description	Qty.
1	02506- 6	(004000-)	Gas Cap, Protectoseal	1

Fig. 54 - Fire Extinguisher Kit

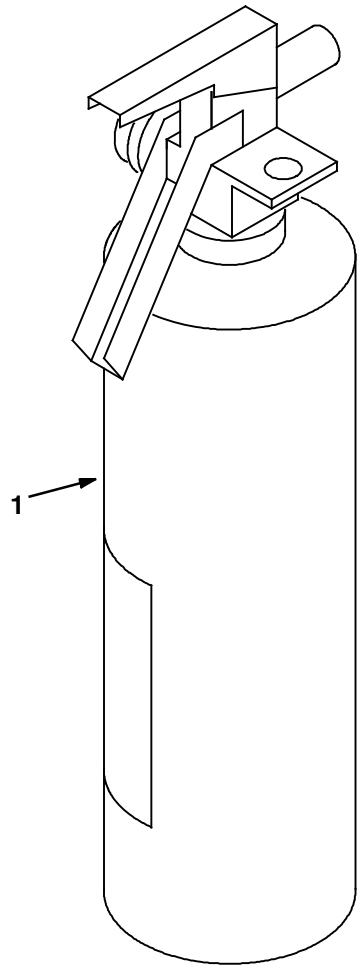

07516 - JP, NA

	Ref.	Part No.	Serial Number		Description	Qty.
▽		70692	(004000-	)	Extinguisher Kit Fire 800	1
▲	1	25312	(004000-	)	Extinguisher, Fire	

Fig. 55 - Solid Tire and Rim Assembly

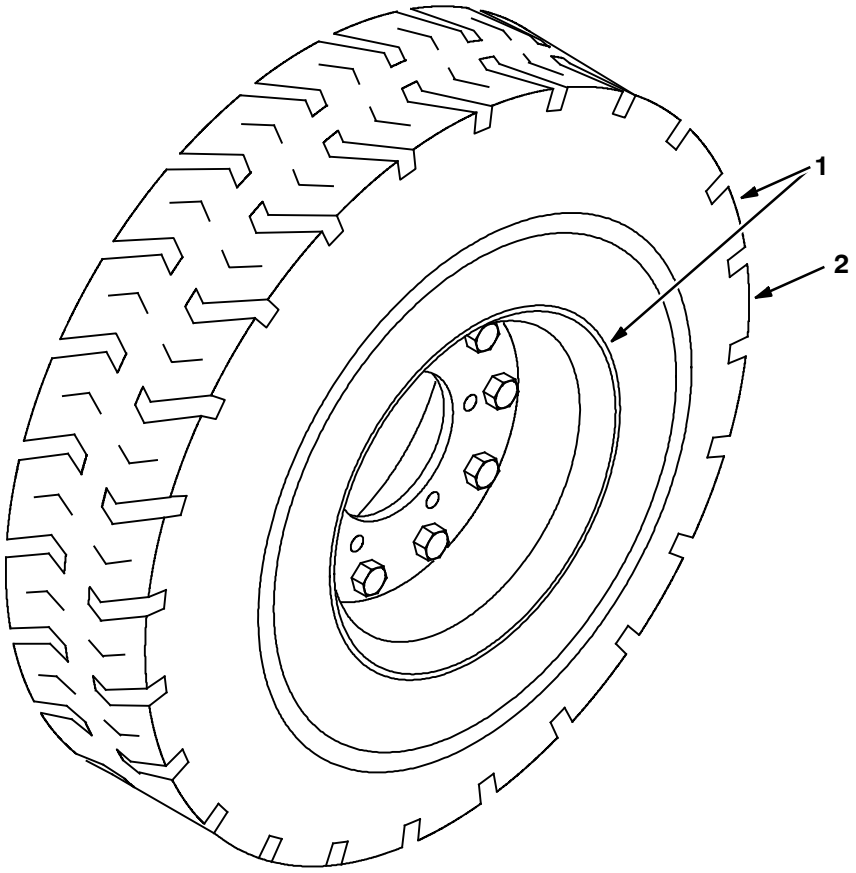

07666 - ALL

	Ref.	Part No.	Serial Number		Description	Qty.
▽	1	21671	(004000-	)	Tire and Rim Assy, Solid 6.5	1
▲	2	63228	(004000-	)	Tire, Solid	1

Fig. 56 - Seat Belt Kit

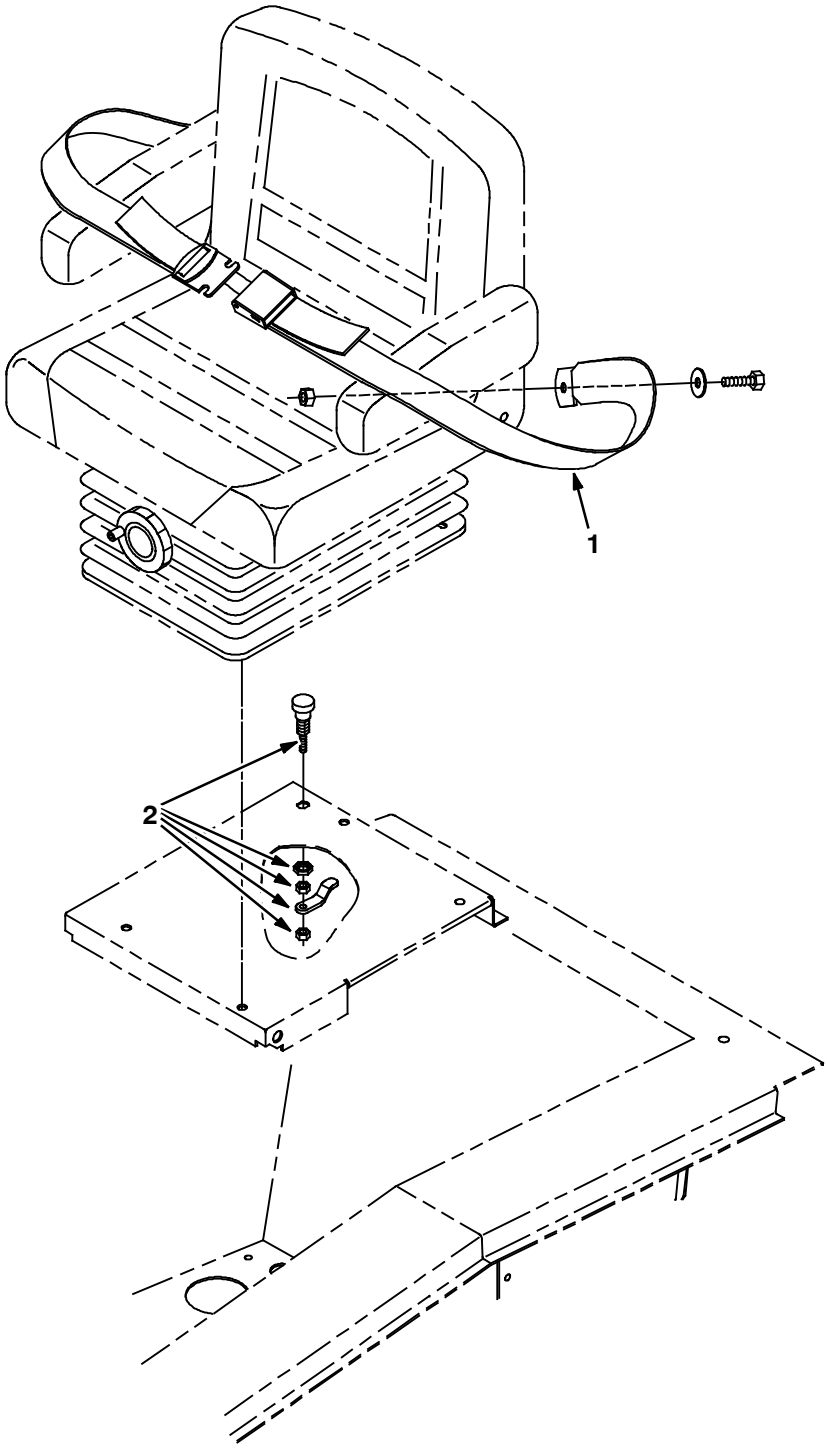

07674 - ALL

	Ref.	Part No.	Serial Number		Description	Qty.
▽		70690	(004000-	)	Seat Belt Kit	1
▲	1	30533	(004000-	)	Belt, Seat	1
▲	2	87337	(004000-	)	Latch, Door	1

Fig. 57 - RFS Filter System Group

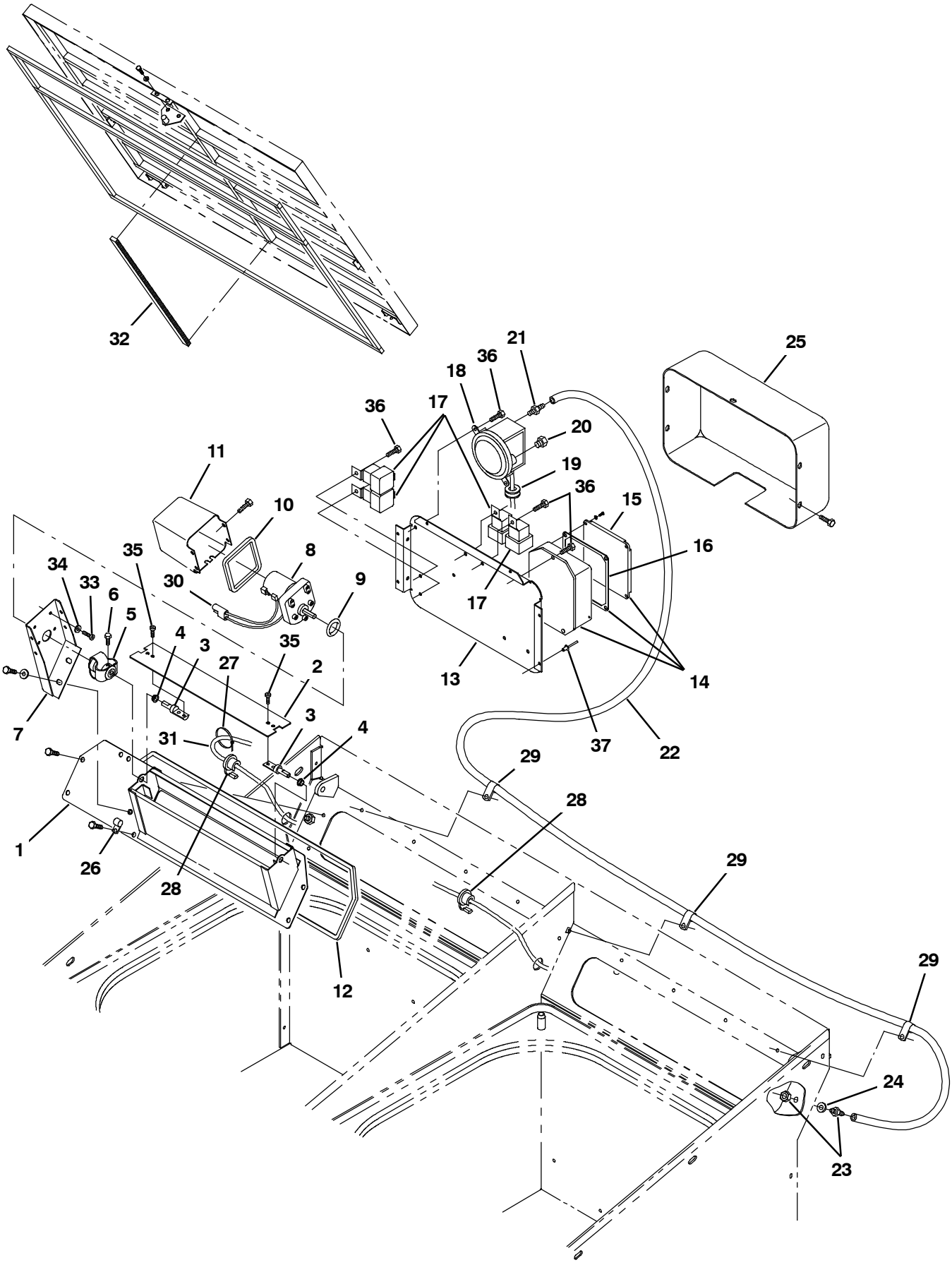

10229 - ALL

Fig. 57 - RFS Filter System Group

	Ref.	Part No.	Serial Number	Description	Qty.
▽		79174	(004000-)	Rfs Kit	1
▲	1	79160	(004000-)	Duct Wldt, Rfs	2
▲	2	79156	(004000-)	Plate, Shutter	2
▲	3	79159	(004000-)	Shaft, Pivot	4
▲	4	11747	(004000-)	Bearing, Nylon	4
▲	5	79158	(004000-)	Coupling	2
▲	6	42011	(004000-)	Screw, Hex, 10- 24 X 0.50, Ss	4
▲	7	79157	(004000-)	Bracket, Mounting, Gearmotor	2
▲	8	79170	(004000-)	Motor, Ele, Geared, 12Vdc	2
▲	9	79172	(004000-)	Seal, O- Ring .787Idx.210Th	2
▲	10	79167	(004000-)	Seal	2
▲	11	79155	(004000-)	Cover, Motor	2
▲	12	79168	(004000-)	Seal	2
▲	13	79177	(004000-)	Plate, Mounting, Rfs Control	1
▲▽	14	1074764	(004000-)	Controller Assy, Rfs	1
▲▲	15	59954	(004000-)	Cover, Housing, Electrical	1
▲▲	16	59921	(004000-)	Gasket, Cover, Alum	1
▲	17	56186	(004000-)	Relay, Shrouded, 12 Vdc	4
▲	18	75465	(004000-)	Switch, Pressure	1
▲	19	10632- 4	(004000-)	Grommet,Rbr,0.62Id,For .06Matl	1
▲	20	82739	(004000-)	Ftg, Breather	1
▲	21	40607	(004000-)	Ftg,Brass,St Bm03/Pm02	1
▲	22	21301	(004000-)	Hose, Vacuum, .16 Id X 76.0 Lg	1
▲	23	39923	(004000-)	Ftg,Bulkhead- Barb Wh 1074X4	1
▲	24	43454	(004000-)	Washer, .344B .69D .06Nylon	1
▲	25	79169	(004000-)	Cover, Electrical	1
▲	26	40678	(004000-)	Clamp,Cable .44D .62Wide	2
▲	27	49266	(004000-)	Tie, Cable 1.75D Max 7.50Lg	12
▲	28	34864	(004000-)	Strain,Relief	2
▲	29	46236	(004000-)	Clamp- Cable, 0.25Dia 0.56Wth	3
▲	30	79025	(004000-)	Harness, Motor, Duct	2
▲	31	79026	(004000-)	Harness, Hopper, Rfs	1
▲		83706	(004000-)	Harness, Rfs Jumper	1
▲	32	70851	(004000-)	Seal, Urethane	1
▲		44961	(004000-)	Tie, Cable 4.00 Max 14.50Lg	28
▲		23935	(004000-)	Seal, Filter	2
▲		1064188	(004000-)	Circuitbreaker, 15.0a, Resetable	2
▲	33	49766	(004000-)	Screw, Hex, #08- 32 X 0.38, Ss	8
▲	34	02938	(004000-)	Washer, Lock, Int, 08 Ss	8
▲	35	06932	(004000-)	Screw, Pan, M5 X 0.80 X 10, 4.8	8
▲	36	74455	(004000-)	Screw, Hex, M6 X 1.0 X 12, Fmg	9
▲	37	34738	(004000-)	Rivet, Blind, .125d X 0.32 X .25d, Stl	6

Fig. 58 - Cab AC Drain Hose Kit

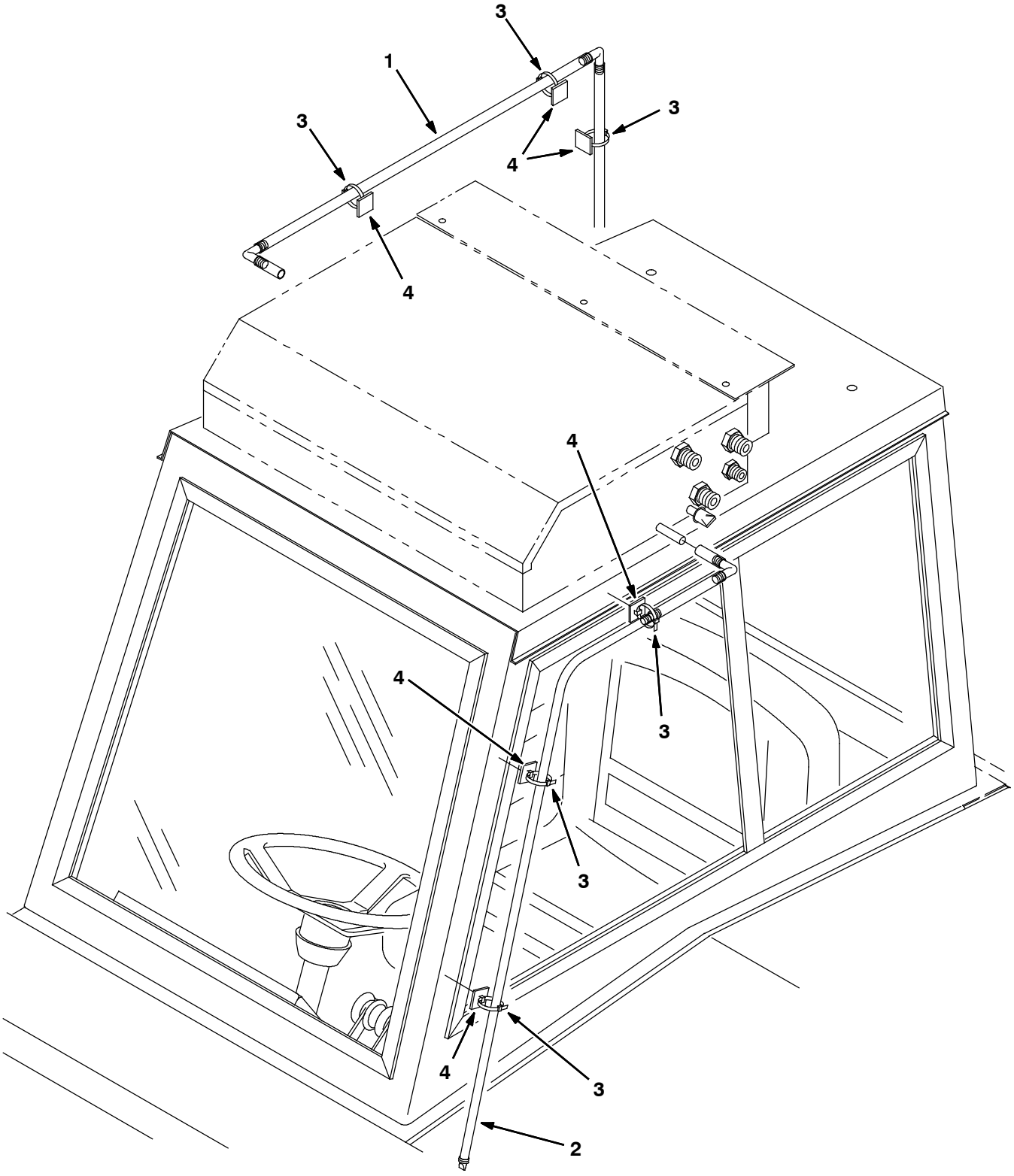

353660 - ALL

Fig. 58 - Cab AC Drain Hose Kit

	Ref.	Part No.	Serial Number		Description	Qty.
▽		374133	(004000-	)	Kit, Ci, Drain Hose, A/C	1
▲	1	374134	(004000-	)	Hose Assy, Drain, A/C	1
▲	2	374135	(004000-	)	Hose Assy, Drain, A/C	1
▲	3	49266	(004000-	)	Tie, Cable, Nyl, 07.3l .19w 1.8 Max D	10
▲	4	55248	(004000-	)	Mount, Cable Tie	10

Fig. 59 - Neutral Start Group

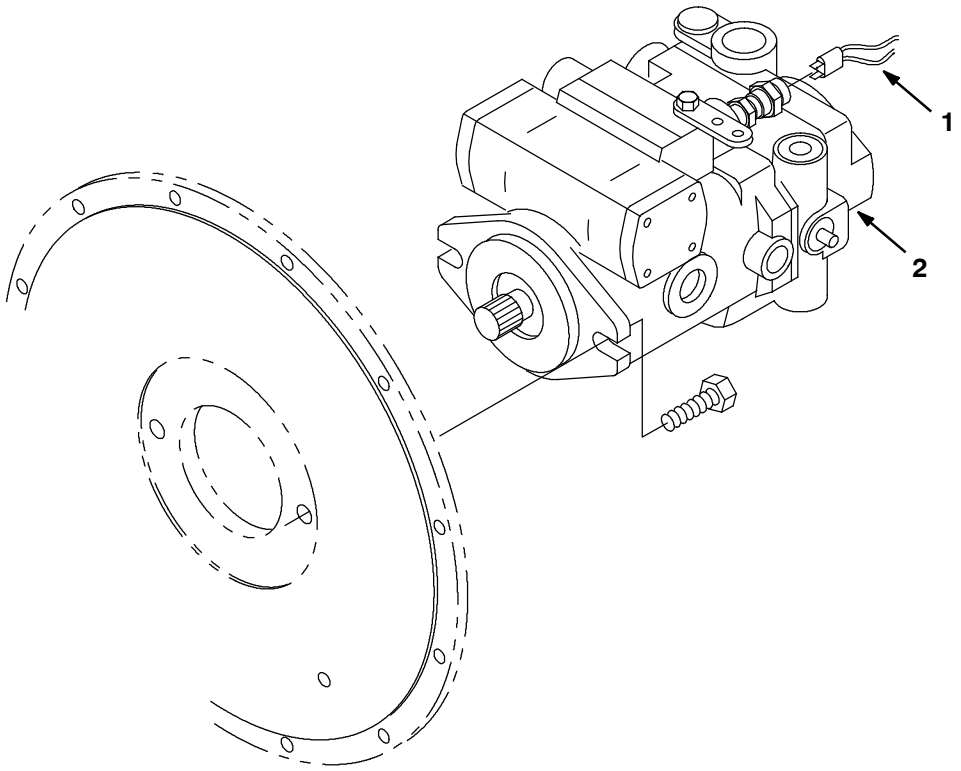

09831 - ALL

Ref.	Part No.	Serial Number	Description	Qty.
1	63407	(004000-)	Harness, Neutral, Start	1
2	74164	(004000- 004586)	Pump, Hyd Piston V 2.48 (See breakdowns)	1
2	373405	(004587-)	Pump, Hyd Piston V 2.48 (See breakdowns)	1

Fig. 60 - Muffler Group, Non-Catalytic

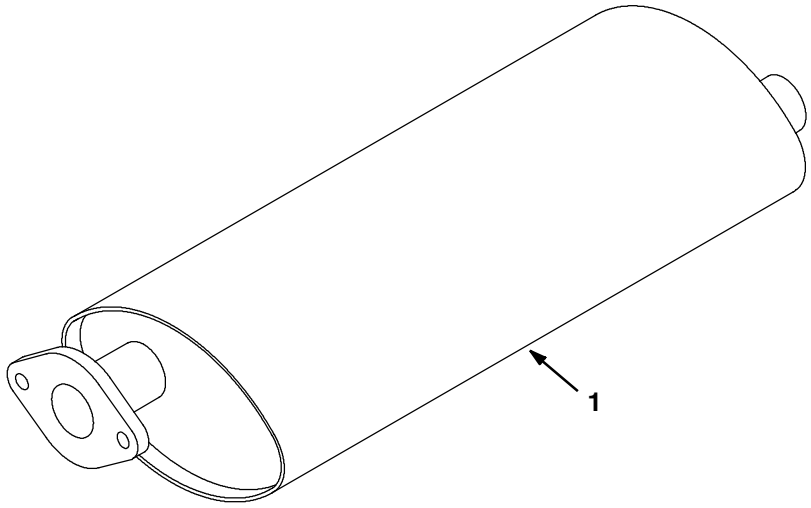

09831 - GM, G, LP

Ref.	Part No.	Serial Number	Description	Qty.
1	1012634	(006000- 006999)	Muffler, Exhaust	1

Fig. 61 - Documentation Group

Ref.	Part No.	Serial Number		Description	Qty.
	330120	(004000-	)	Manual Pkg 800G	1
	MM337	(004000-	)	Manual, Service 800/810	1
	393223	(004000-	)	Manual, Service, Eng, [Gm 3.0L]	1
	21791	(004000-	)	Manual, Service FD (Lrg) 2.3L	1
	385439	(004000-	)	Manual, Service FD (Lrg) 2.5L	1
	330122	(004000-	)	Manual Op/Mt 800G Spanish	1
	330123	(004000-	)	Manual Op/Mt 800G French	1
	1052092	(004000-	)	Video, Oprtr, Training, Dvd [800]	1
	9003927	(007000-	)	Manual, Eng, Cd- Rom [Tier Ii,Gm3.0l]	1

To view, print, order, download the latest Parts manual, other language Operator manuals, and Use and Care Guides (wall charts), visit:

www.tennantco.com/manual

SECTION 4

Contents **Page**

Fig. 1 - Hydraulic Piston Pump Breakdown, 74163 4-2
Fig. 2 - Hydraulic Piston Pump Breakdown, 74163 4-4
Fig. 3 - Hydraulic Piston Pump Breakdown, 373404 4-6
Fig. 4 - Hydraulic Piston Pump Breakdown, 373404 4-8
Fig. 5 - Hydraulic Manual Control Breakdown, 74273 4-10
Fig. 6 - Hydraulic Piston Pump Breakdown, 74164 4-12
Fig. 7 - Hydraulic Piston Pump Breakdown, 74164 4-14
Fig. 8 - Hydraulic Piston Pump Breakdown, 373405 4-16
Fig. 9 - Hydraulic Piston Pump Breakdown, 373405 4-18
Fig. 10 - Hydraulic Manual Control Breakdown, 373369 4-20
Fig. 11 - Hydraulic Gear Pump Breakdown, 62561 4-22
Fig. 12 - Hydraulic Gear Pump Breakdown, 373254 4-24
Fig. 13 - Hydraulic Motor Breakdown, 63426 . . 4-26
Fig. 14 - Hydraulic Motor Breakdown, 22626 . . 4-28
Fig. 15 - Hydraulic Motor Breakdown, 373464 . 4-30
Fig. 16 - Hydraulic Motor Breakdown, 53434 . . 4-32
Fig. 17 - Hydraulic Motor Breakdown, 79781 . . 4-33
Fig. 18 - Hydraulic Motor Breakdown, 19117 . . 4-34
Fig. 19 - Hydraulic Motor Breakdown, 63542 . . 4-35
Fig. 20 - Hydraulic Steering Valve Breakdown, 65242 4-36
Fig. 21 - Hydraulic Solenoid Valve Breakdown, 84015 4-38
Fig. 22 - Hydraulic Solenoid Valve Breakdown, 84016 4-39
Fig. 23 - Hydraulic Valve Breakdown, 375563 . 4-40
Fig. 24 - Hydraulic Solenoid Valve Breakdown, 84014 4-42
Fig. 25 - Hydraulic Cylinder Breakdown, 53601 4-44
Fig. 26 - Hydraulic Cylinder Breakdown, 1026719 4-45

Contents **Page**

Fig. 27 - Cab Assembly 4-46
Fig. 28 - Cab Door Assembly (000000-008088) 4-48
Fig. 29 - Cab Door Assembly (008089-) 4-50
Fig. 30 - Cab Insulation Group 4-52
Fig. 31 - Cab Wire Harness Group 4-54
Fig. 32 - AC Condenser Box Breakdown, 380625 (000000-008088) 4-55
Fig. 33 - AC Condenser Box Breakdown, 9012898 (008089-) 4-56
Fig. 34 - AC and Heater Box Breakdown, 380613 (000000-008088) 4-58
Fig. 35 - AC and Heater Box Breakdown, 1073904 (008089-) 4-60
Fig. 36 - Heater Box Breakdown, 380614 (000000-008088) 4-62
Fig. 37 - Heater Box Breakdown, 1073905 (008089-) 4-64
Fig. 38 - Brake Assy, Right Hand (R.h.) 77790 4-66
Fig. 39 - Brake Assy, Left Hand (L.h.) 77770 . . 4-68
Fig. 40 - LPG EFI Breakdown, 371894 4-70
Fig. 41 - LPG EFI Breakdown, 371895 4-72
Fig. 42 - Gasoline EFI Breakdown, 371896 . . . 4-74
Fig. 43 - Gasoline Electronic Fuel Ignition Breakdown, 371897 4-76
Fig. 44 - Hydraulic Solenoid Valve Breakdown, 1049210 4-78
Fig. 45 - Hydraulic Solenoid Valve Breakdown, 1049209 4-80
Fig. 46 - Hydraulic Solenoid Valve Breakdown, 1049211 4-82

Fig. 1 - Hydraulic Piston Pump Breakdown, 74163

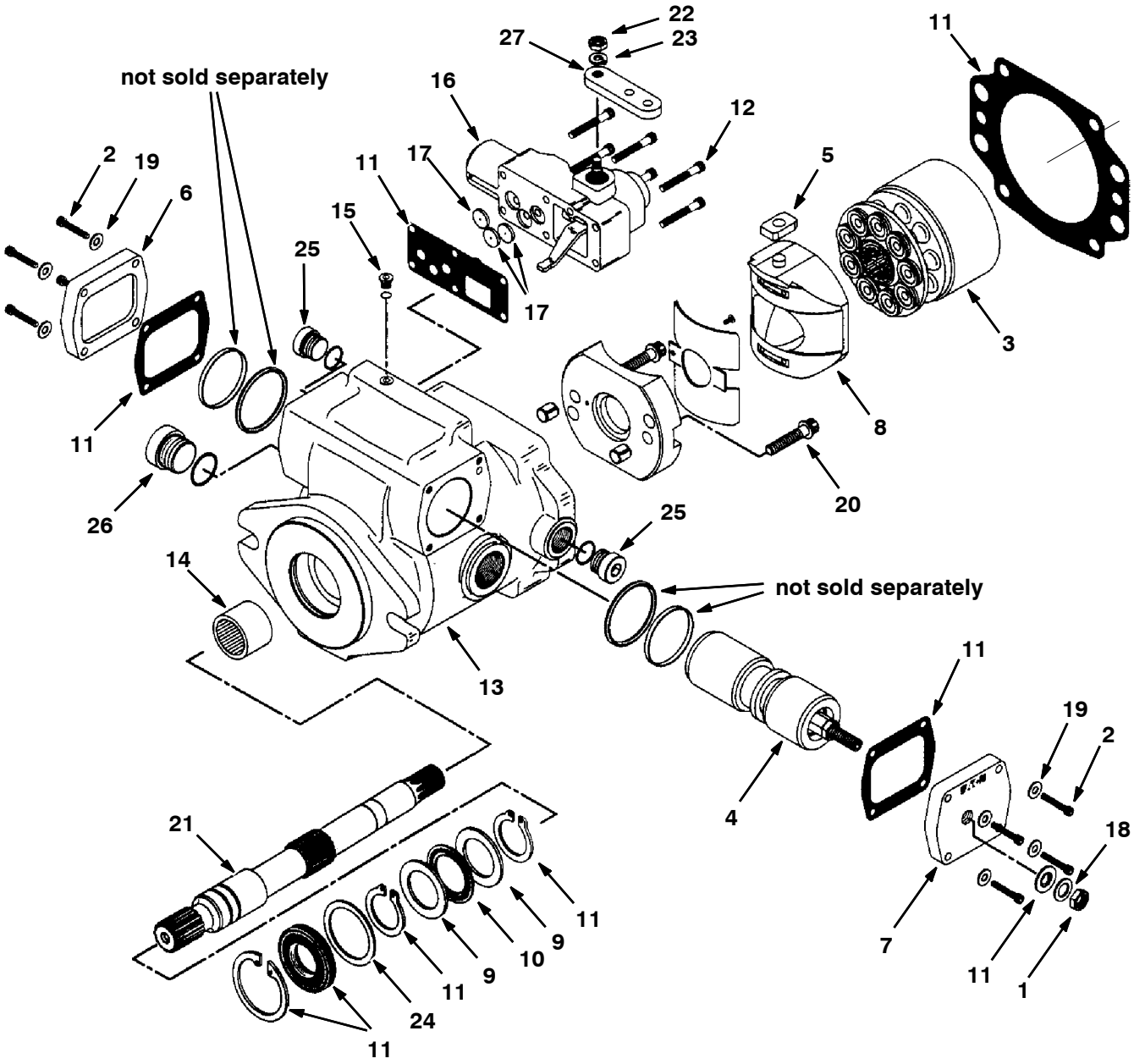

Fig. 1 - Hydraulic Piston Pump Breakdown, 74163

NOTE: Piston Pump, TENNANT Part Number 74163, includes Fig. 1, Fig. 2 and Fig. 5.

	Ref.	Part No.	Serial Number	Description	Qty.
	1	74184	(000000-)	Nut, Jam	1
	2	74223	(000000-)	Screw, Cap	8
	3	61882	(000000-)	Rotating Kit	1
	4	74253	(000000-)	Piston, Servo	1
	5	74254	(000000-)	Follower, Piston	1
	6	74256	(000000-)	Plate, Cover En	1
	7	74257	(000000-)	Plate, Cover En	1
	8	74258	(000000-)	Camplate S/A En	1
	9	74240	(000000-)	Race, Bearing Ce	2
	10	74210	(000000-)	Bearing	1
	11	74283	(000000-)	Seal Kit, Pump En	1
	12	74262	(000000-)	Screw, Cap En	6
▽		74263	(000000-)	Housing S/A En	1
▲	13	79771	(000000-)	Housing En	1
▲	14	37462	(000000-)	Bearing	1
▲	15	79742	(000000-)	Plug S/A En	1
	16	74273	(000000-)	Control, Manual (See Breakdowns)	1
	17	74276	(000000-)	Orifice, Valve En	3
	18	74280	(000000-)	Washer En	1
	19	74281	(000000-)	Washer En	8
	20	79747	(000000-)	Cap Screw En	2
	21	74265	(000000-)	Shaft, Drive Sp En	1
	22	74266	(000000-)	Nut En	1
	23	74267	(000000-)	Lockwasher En	1
	24	37460	(000000-)	Washer	1
	25	13907	(000000-)	Plug #8	2
	26	79779	(000000-)	Plug,#12 O- Ring Ph	1
	27	74272	(000000-)	Arm, Control En	1

Fig. 2 - Hydraulic Piston Pump Breakdown, 74163

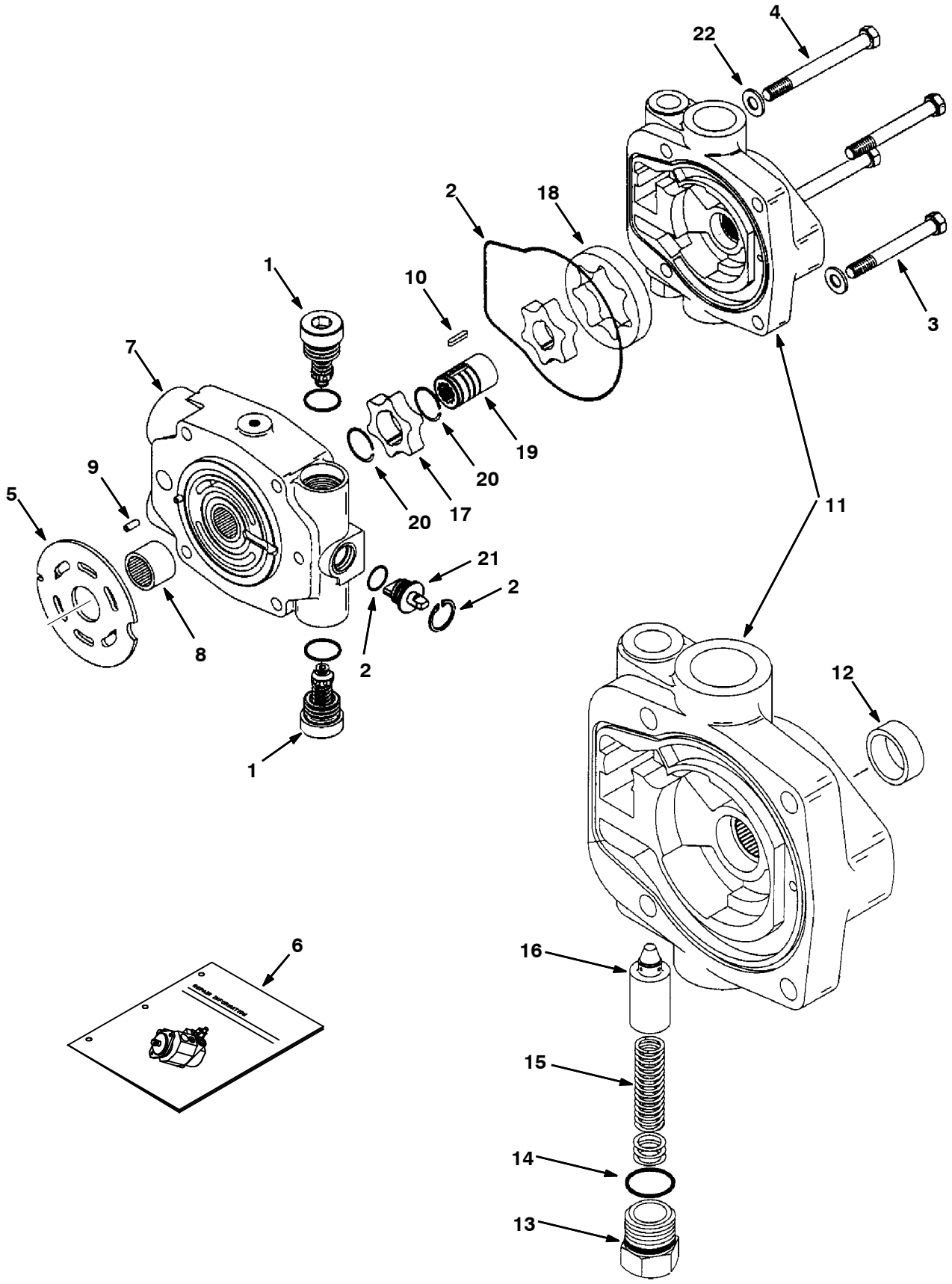

10136,09670 - ALL

Fig. 2 - Hydraulic Piston Pump Breakdown, 74163

NOTE: Piston Pump, TENNANT Part Number 74163, includes Fig. 1, Fig. 2 and Fig. 5.

	Ref.	Part No.	Serial Number	Description	Qty.
	1	74259	(000000-)	Relief Valve Sa En	2
	2	74283	(000000-)	Seal Kit, Pump En	1
	3	74260	(000000-)	Screw, Cap En	2
	4	74261	(000000-)	Screw, Cap En	2
	5	61886	(000000-)	Valve Plate	1
	6	79708	(000000-)	Repair Info,Pmp En	1
▽	7	74264	(000000-)	Backplate S/A En	1
▲	8	34159	(000000-)	Bearing	1
▲	9	79748	(000000-)	Roll Pin En	1
	10	74270	(000000-)	Key En	1
▽	11	74271	(000000-)	Charge Pmp Adap En	1
▲	12	79749	(000000-)	Bushing En	1
▲	13	79750	(000000-)	Plug En	1
▲	14	79751	(000000-)	Shims En	1
▲	15	79752	(000000-)	Spring En	1
▲	16	79753	(000000-)	Poppet En	1
	17	74274	(000000-)	Geroter,Ring In En	1
	18	74275	(000000-)	Geroter,Ring Ot En	1
	19	74277	(000000-)	Coupler En	1
	20	74278	(000000-)	Ring, Retaining En	2
	21	74279	(000000-)	Actuator, Valve En	1
	22	74282	(000000-)	Washer En	4

Fig. 3 - Hydraulic Piston Pump Breakdown, 373404

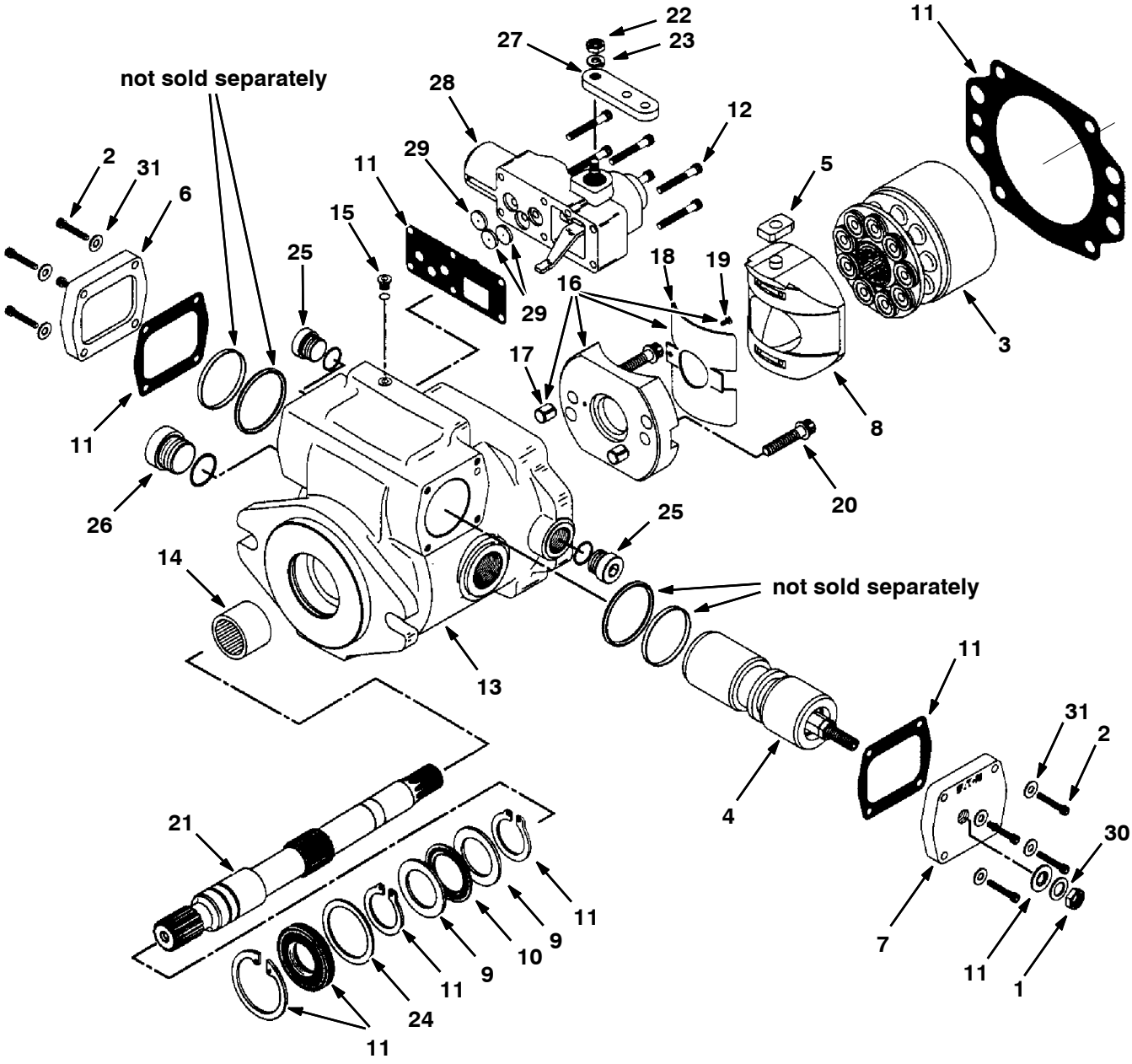

10136 - ALL

Fig. 3 - Hydraulic Piston Pump Breakdown, 373404

NOTE: Piston Pump, TENNANT Part Number 373404, includes.Fig. 3, Fig. 4 and Fig. 5.

	Ref.	Part No.	Serial Number		Description	Qty.
	1	74184	(000000-	)	Nut, Jam	1
	2	74223	(000000-	)	Screw, Cap	8
	3	61882	(000000-	)	Rotating Kit	1
	4	373407	(000000-	)	Piston, Servo	1
	5	74254	(000000-	)	Follower, Piston	1
	6	74256	(000000-	)	Plate, Cover En	1
	7	74257	(000000-	)	Plate, Cover En	1
	8	74258	(000000-	)	Camplate S/A En	1
	9	74240	(000000-	)	Race, Bearing Ce	2
	10	74210	(000000-	)	Bearing	1
	11	74283	(000000-	)	Seal Kit, Pump En	1
	12	74262	(000000-	)	Screw, Cap En	6
▽		373408	(000000-	)	Housing S/A En	1
▲	13	373409	(000000-	)	Housing En	1
▲	14	37462	(000000-	)	Bearing	1
▲	15	79742	(000000-	)	Plug S/A En	1
▽	16	373410	(000000-	)	Cradle Sub Assy En	1
▲	17	373218	(000000-	)	Dowel Bushing En	2
▲	18	373414	(000000-	)	Bushing En	1
▲	19	373415	(000000-	)	Cap Screw En	1
	20	79747	(000000-	)	Cap Screw En	2
	21	74265	(000000-	)	Shaft, Drive Sp En	1
	22	74266	(000000-	)	Nut En	1
	23	74267	(000000-	)	Lockwasher En	1
	24	37460	(000000-	)	Washer	1
	25	13907	(000000-	)	Plug #8	2
	26	79779	(000000-	)	Plug,#12 O- Ring Ph	1
	27	74272	(000000-	)	Arm, Control En	1
	28	74273	(000000-	)	Control, Manual (See Breakdowns)	1
	29	74276	(000000-	)	Orifice, Valve En	3
	30	74280	(000000-	)	Washer En	1
	31	74281	(000000-	)	Washer En	8

Fig. 4 - Hydraulic Piston Pump Breakdown, 373404

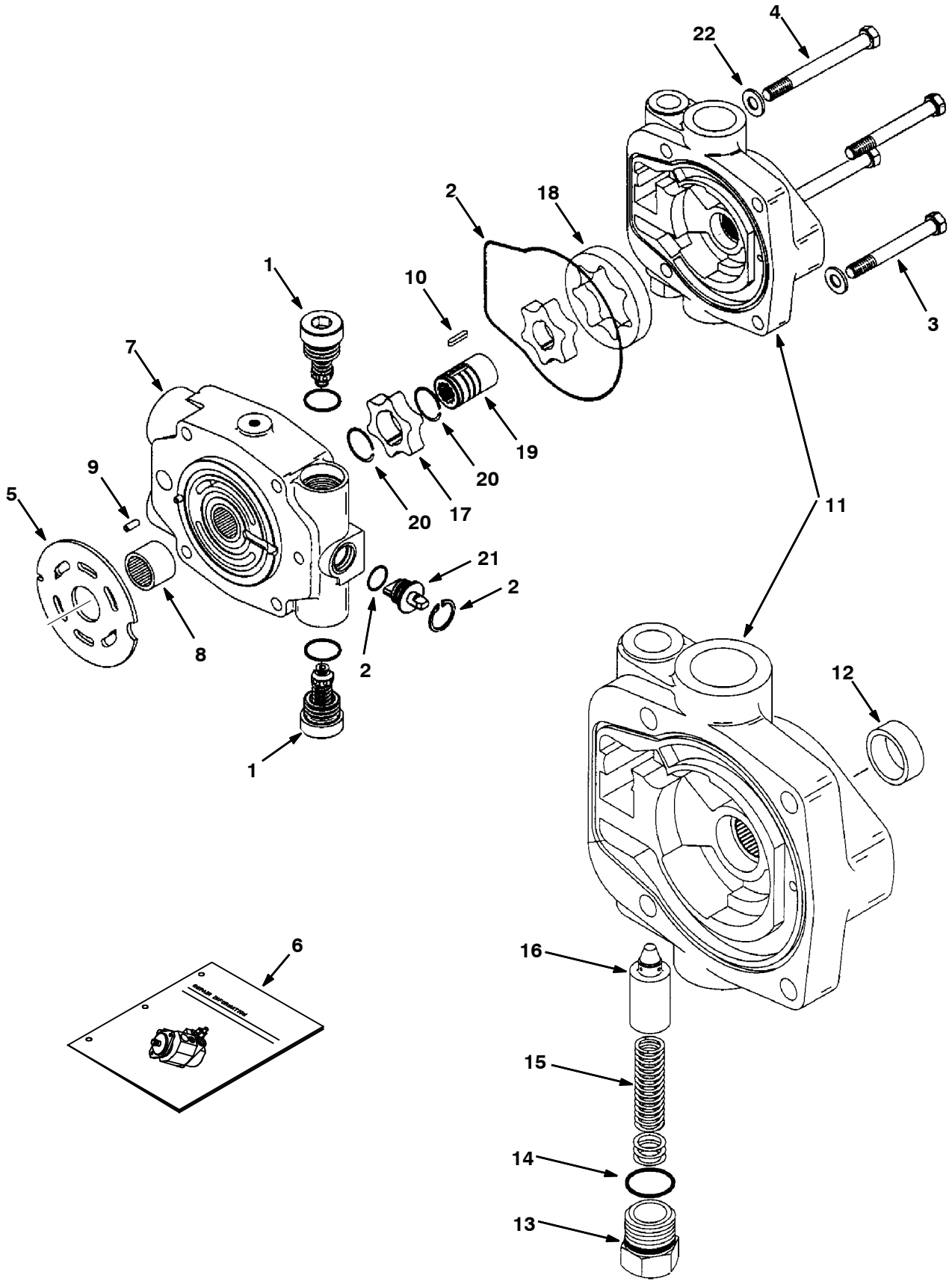

10136,09670 - ALL

Fig. 4 - Hydraulic Piston Pump Breakdown, 373404

NOTE: Piston Pump, TENNANT Part Number 373404, includes .Fig. 3, Fig. 4 and Fig. 5.

	Ref.	Part No.	Serial Number		Description	Qty.
	1	74259	(000000-	)	Relief Valve Sa En	2
	2	74283	(000000-	)	Seal Kit, Pump En	1
	3	373374	(000000-	)	Screw, Cap En	2
	4	373375	(000000-	)	Screw, Cap En	2
	5	61886	(000000-	)	Valve Plate	1
	6	373406	(000000-	)	Repair Info,Pmp En	1
▽	7	373412	(000000-	)	Backplate S/A En	1
▲	8	34159	(000000-	)	Bearing	1
▲	9	79748	(000000-	)	Roll Pin En	1
	10	74270	(000000-	)	Key En	1
▽	11	74271	(000000-	)	Charge Pmp Adap En	1
▲	12	79749	(000000-	)	Bushing En	1
▲	13	79750	(000000-	)	Plug En	1
▲	14	79751	(000000-	)	Shims En	1
▲	15	79752	(000000-	)	Spring En	1
▲	16	79753	(000000-	)	Poppet En	1
	17	74274	(000000-	)	Geroter,Ring In En	1
	18	74275	(000000-	)	Geroter,Ring Ot En	1
	19	74277	(000000-	)	Coupler En	1
	20	74278	(000000-	)	Ring, Retaining En	2
	21	373413	(000000-	)	Actuator, Valve En	1
	22	74282	(000000-	)	Washer En	4

Fig. 5 - Hydraulic Manual Control Breakdown, 74273

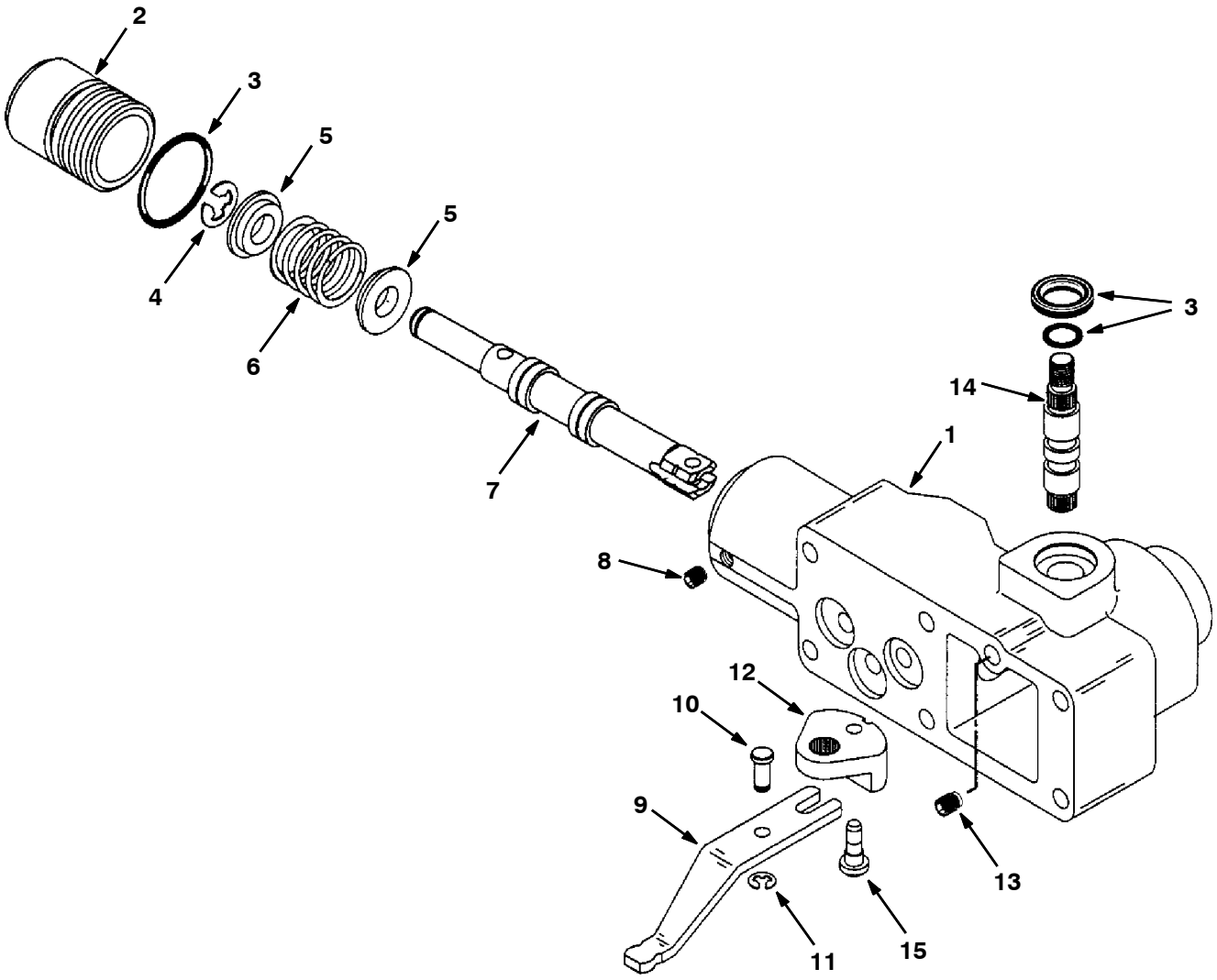

10134 - ALL

Fig. 5 - Hydraulic Manual Control Breakdown, 74273

NOTE: Piston Pump, TENNANT Part Number 74163, includes Fig. 1, Fig. 2 and Fig. 5.

NOTE: Piston Pump, TENNANT Part Number 373404, includes .Fig. 3, Fig. 4 and Fig. 5.

	Ref.	Part No.	Serial Number		Description	Qty.
▽		74273	(000000-	)	Control, Manual	1
▲	1	79754	(000000-	)	Housing,Control	1
▲	2	79755	(000000-	)	Plug	1
▲	3	79776	(000000-	)	Seal Kit,Cntrl	1
▲	4	79756	(000000-	)	Ring, Retaining	1
▲	5	79757	(000000-	)	Spring,Retainer	2
▲	6	79758	(000000-	)	Spring, Cntr	1
▲	7	79759	(000000-	)	Valve Spool	1
▲	8	79760	(000000-	)	Screw, Set	1
▲	9	79761	(000000-	)	Link, Feedback	1
▲	10	79762	(000000-	)	Dowel Pin	1
▲	11	79763	(000000-	)	Ring, Retaining	1
▲	12	79764	(000000-	)	Bell Crank	1
▲	13	79765	(000000-	)	Screw, Set	1
▲	14	79766	(000000-	)	Shaft, Input	1
▲	15	79767	(000000-	)	Pin, Headed	1

Fig. 6 - Hydraulic Piston Pump Breakdown, 74164

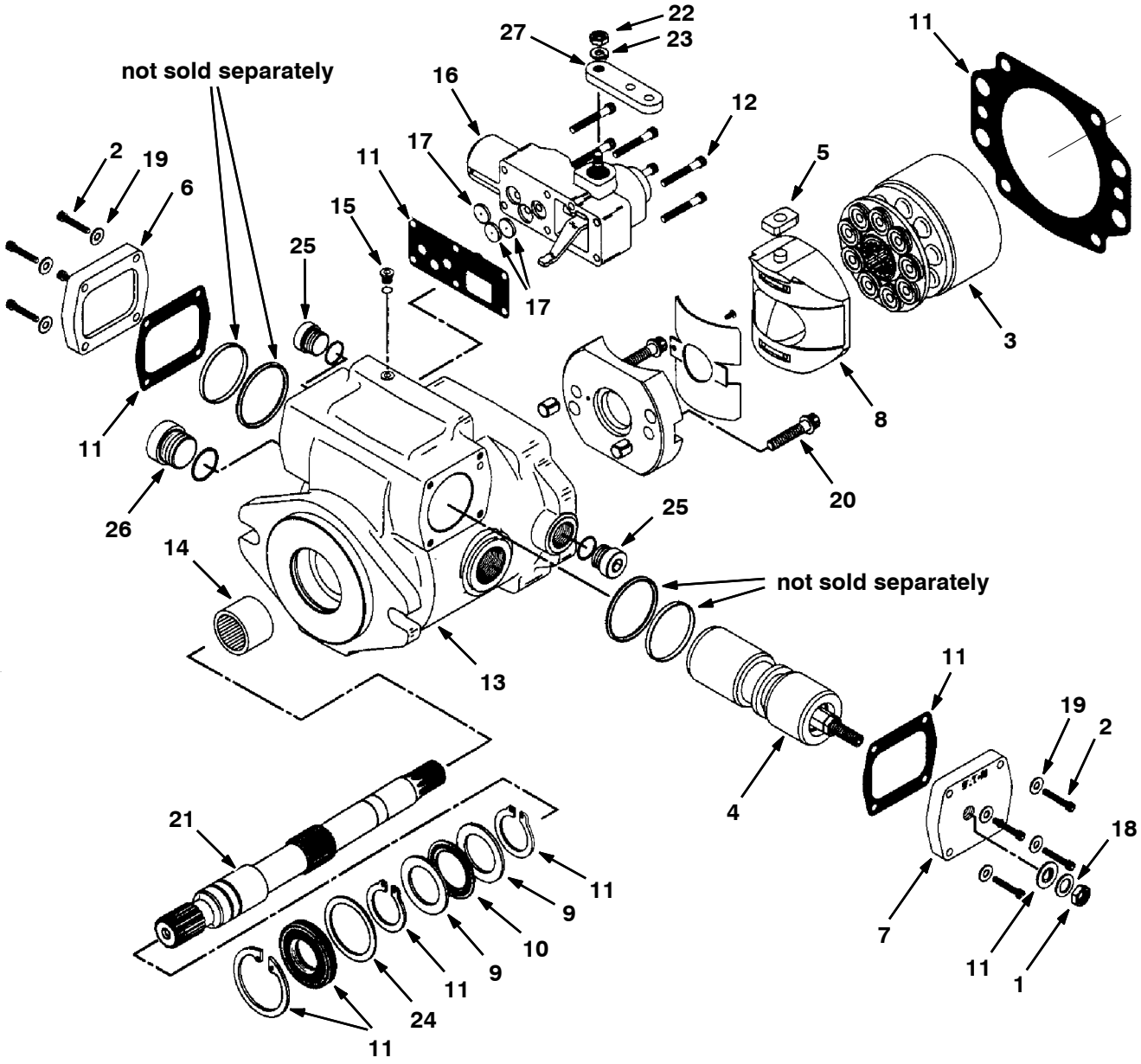

10136 - ALL

Fig. 6 - Hydraulic Piston Pump Breakdown, 74164

NOTE: Piston Pump, TENNANT Part Number 74164, includes Fig. 6, Fig. 7 and Fig. 10.

	Ref.	Part No.	Serial Number	Description	Qty.
	1	74184	(000000-)	Nut, Jam	1
	2	74223	(000000-)	Screw, Cap	8
	3	61882	(000000-)	Rotating Kit	1
	4	74253	(000000-)	Piston, Servo	1
	5	74254	(000000-)	Follower, Piston	1
	6	74256	(000000-)	Plate, Cover En	1
	7	74257	(000000-)	Plate, Cover En	1
	8	74258	(000000-)	Camplate S/A En	1
	9	74240	(000000-)	Race, Bearing Ce	2
	10	74210	(000000-)	Bearing	1
	11	74283	(000000-)	Seal Kit, Pump En	1
	12	74262	(000000-)	Screw, Cap En	6
▽		74263	(000000-)	Housing S/A En	1
▲	13	79771	(000000-)	Housing En	1
▲	14	37462	(000000-)	Bearing	1
▲	15	79742	(000000-)	Plug S/A En	1
	16	373369	(000000-)	Control, Manual (See Breakdowns)	1
	17	74276	(000000-)	Orifice, Valve En	3
	18	74280	(000000-)	Washer En	1
	19	74281	(000000-)	Washer En	8
	20	79747	(000000-)	Cap Screw En	2
	21	74265	(000000-)	Shaft, Drive Sp En	1
	22	74266	(000000-)	Nut En	1
	23	74267	(000000-)	Lockwasher En	1
	24	37460	(000000-)	Washer	1
	25	13907	(000000-)	Plug #8	2
	26	79779	(000000-)	Plug,#12 O- Ring Ph	1
	27	74272	(000000-)	Arm, Control En	1

Fig. 7 - Hydraulic Piston Pump Breakdown, 74164

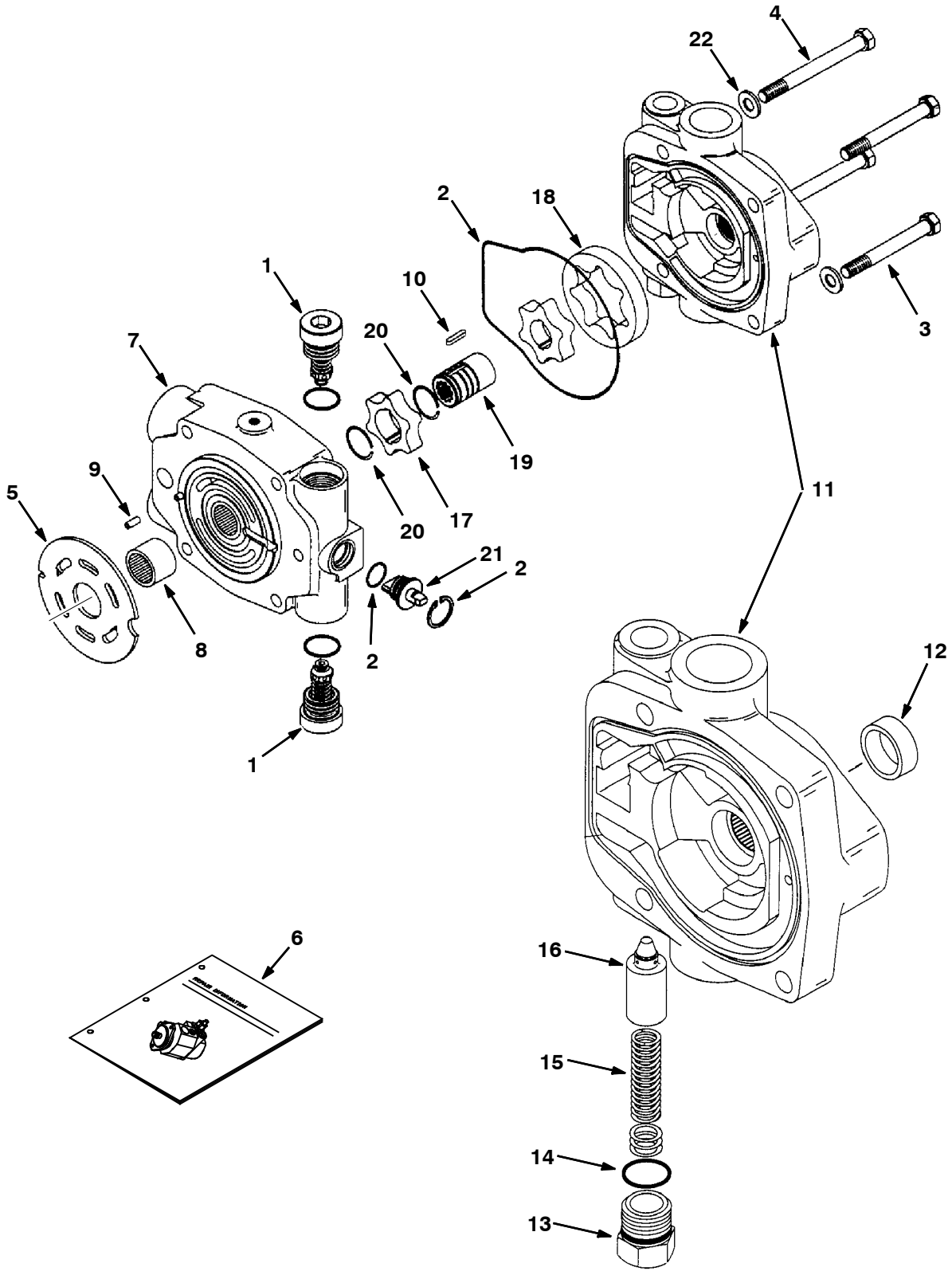

10136,09670 - ALL

Fig. 7 - Hydraulic Piston Pump Breakdown, 74164

NOTE: Piston Pump, TENNANT Part Number 74164, includes Fig. 6, Fig. 7 and Fig. 10.

	Ref.	Part No.	Serial Number		Description	Qty.
	1	74259	(000000-	)	Relief Valve Sa En	2
	2	74283	(000000-	)	Seal Kit, Pump En	1
	3	74260	(000000-	)	Screw, Cap En	2
	4	74261	(000000-	)	Screw, Cap En	2
	5	61886	(000000-	)	Valve Plate	1
	6	79708	(000000-	)	Repair Info,Pmp En	1
▽	7	74264	(000000-	)	Backplate S/A En	1
▲	8	34159	(000000-	)	Bearing	1
▲	9	79748	(000000-	)	Roll Pin En	1
	10	74270	(000000-	)	Key En	1
▽	11	74271	(000000-	)	Charge Pmp Adap En	1
▲	12	79749	(000000-	)	Bushing En	1
▲	13	79750	(000000-	)	Plug En	1
▲	14	79751	(000000-	)	Shims En	1
▲	15	79752	(000000-	)	Spring En	1
▲	16	79753	(000000-	)	Poppet En	1
	17	74274	(000000-	)	Geroter,Ring In En	1
	18	74275	(000000-	)	Geroter,Ring Ot En	1
	19	74277	(000000-	)	Coupler En	1
	20	74278	(000000-	)	Ring, Retaining En	2
	21	74279	(000000-	)	Actuator, Valve En	1
	22	74282	(000000-	)	Washer En	4

Fig. 8 - Hydraulic Piston Pump Breakdown, 373405

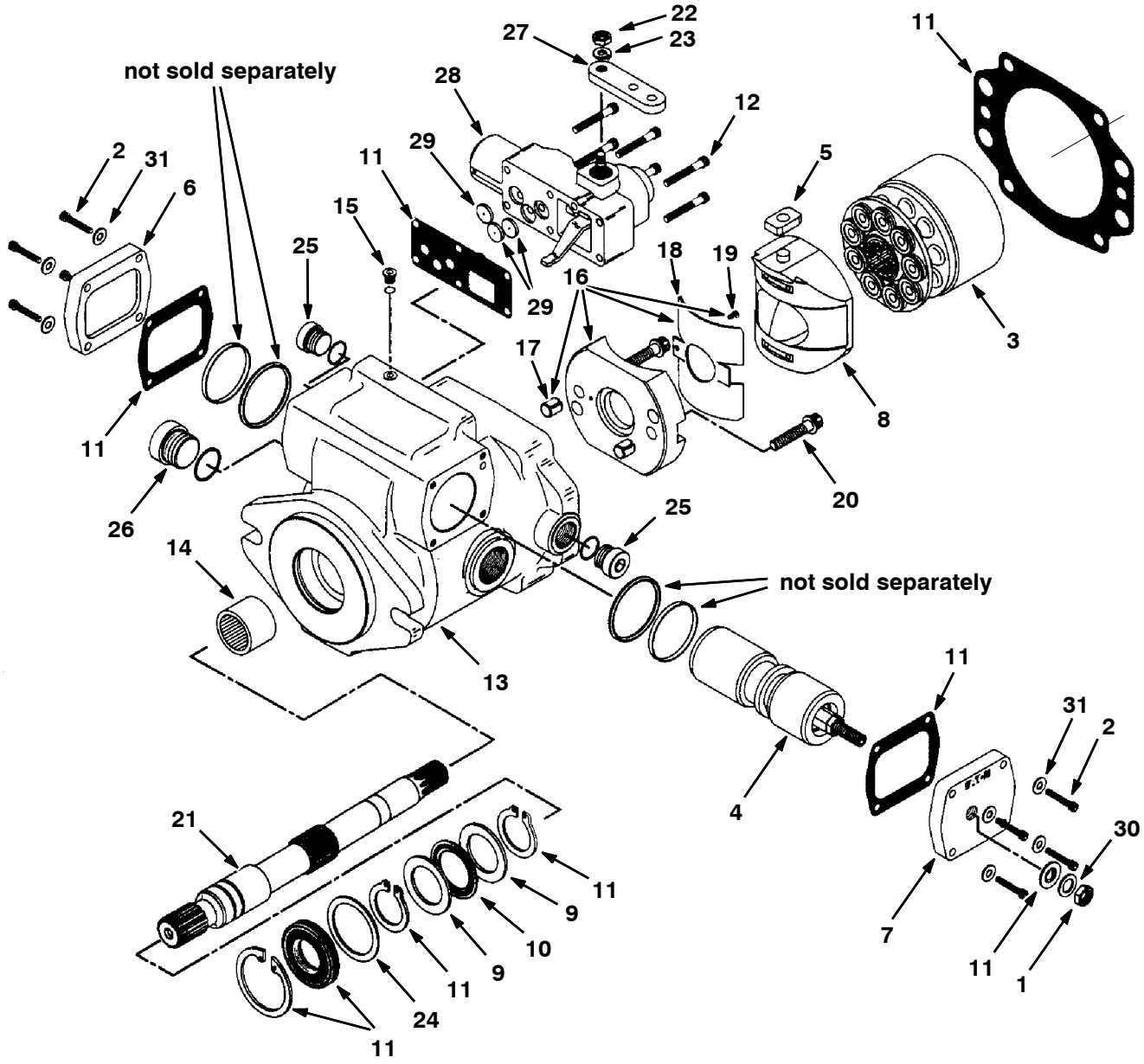

10136 - ALL

Fig. 8 - Hydraulic Piston Pump Breakdown, 373405

NOTE: Piston Pump, TENNANT Part Number 373405, includes Fig. 8, Fig. 9 and Fig. 10.

	Ref.	Part No.	Serial Number	Description	Qty.
	1	74184	(000000-)	Nut, Jam	1
	2	74223	(000000-)	Screw, Cap	8
	3	61882	(000000-)	Rotating Kit	1
	4	373407	(000000-)	Piston, Servo	1
	5	74254	(000000-)	Follower, Piston	1
	6	74256	(000000-)	Plate, Cover En	1
	7	74257	(000000-)	Plate, Cover En	1
	8	74258	(000000-)	Camplate S/A En	1
	9	74240	(000000-)	Race, Bearing Ce	2
	10	74210	(000000-)	Bearing	1
	11	74283	(000000-)	Seal Kit, Pump En	1
	12	74262	(000000-)	Screw, Cap En	6
▽		373408	(000000-)	Housing S/A En	1
▲	13	373409	(000000-)	Housing En	1
▲	14	37462	(000000-)	Bearing	1
▲	15	79742	(000000-)	Plug S/A En	1
▽	16	373410	(000000-)	Cradle Sub Assy En	1
▲	17	373218	(000000-)	Dowel Bushing En	2
▲	18	373414	(000000-)	Bushing En	1
▲	19	373415	(000000-)	Cap Screw En	1
	20	79747	(000000-)	Cap Screw En	2
	21	74265	(000000-)	Shaft, Drive Sp En	1
	22	74266	(000000-)	Nut En	1
	23	74267	(000000-)	Lockwasher En	1
	24	37460	(000000-)	Washer	1
	25	13907	(000000-)	Plug #8	2
	26	79779	(000000-)	Plug,#12 O- Ring Ph	1
	27	74272	(000000-)	Arm, Control En	1
	28	373369	(000000-)	Control, Manual (See Breakdowns)	1
	29	74276	(000000-)	Orifice, Valve En	3
	30	74280	(000000-)	Washer En	1
	31	74281	(000000-)	Washer En	8

Fig. 9 - Hydraulic Piston Pump Breakdown, 373405

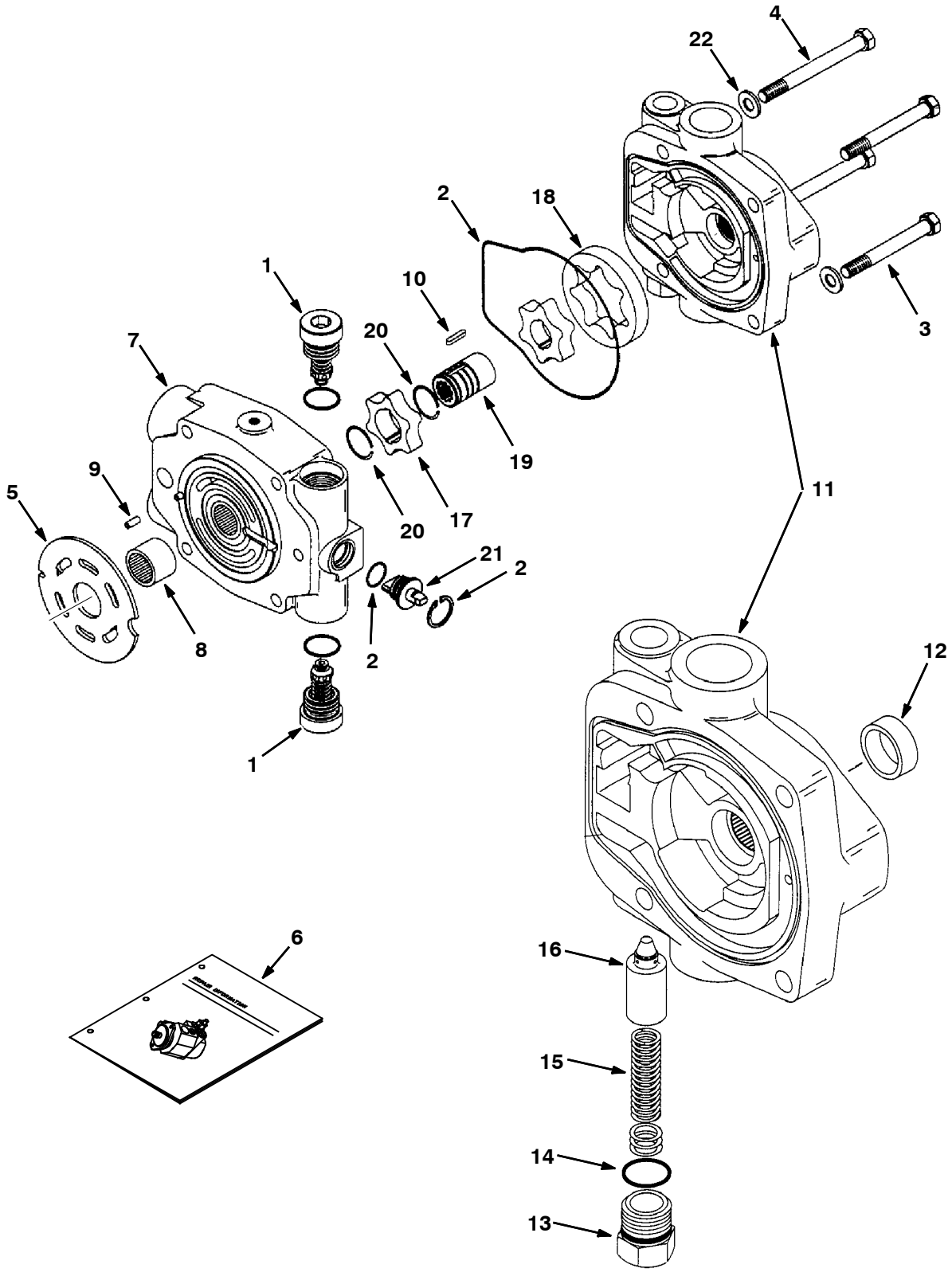

10136,09670 - ALL

Fig. 9 - Hydraulic Piston Pump Breakdown, 373405

NOTE: Piston Pump, TENNANT Part Number 373405, includes Fig. 8, Fig. 9 and Fig. 10.

	Ref.	Part No.	Serial Number		Description	Qty.
	1	74259	(000000-	)	Relief Valve Sa En	2
	2	74283	(000000-	)	Seal Kit, Pump En	1
	3	373374	(000000-	)	Screw, Cap En	2
	4	373375	(000000-	)	Screw, Cap En	2
	5	61886	(000000-	)	Valve Plate	1
	6	373406	(000000-	)	Repair Info,Pmp En	1
▽	7	373412	(000000-	)	Backplate S/A En	1
▲	8	34159	(000000-	)	Bearing	1
▲	9	79748	(000000-	)	Roll Pin En	1
	10	74270	(000000-	)	Key En	1
▽	11	74271	(000000-	)	Charge Pmp Adap En	1
▲	12	79749	(000000-	)	Bushing En	1
▲	13	79750	(000000-	)	Plug En	1
▲	14	79751	(000000-	)	Shims En	1
▲	15	79752	(000000-	)	Spring En	1
▲	16	79753	(000000-	)	Poppet En	1
	17	74274	(000000-	)	Geroter,Ring In En	1
	18	74275	(000000-	)	Geroter,Ring Ot En	1
	19	74277	(000000-	)	Coupler En	1
	20	74278	(000000-	)	Ring, Retaining En	2
	21	373413	(000000-	)	Actuator, Valve En	1
	22	74282	(000000-	)	Washer En	4

Fig. 10 - Hydraulic Manual Control Breakdown, 373369

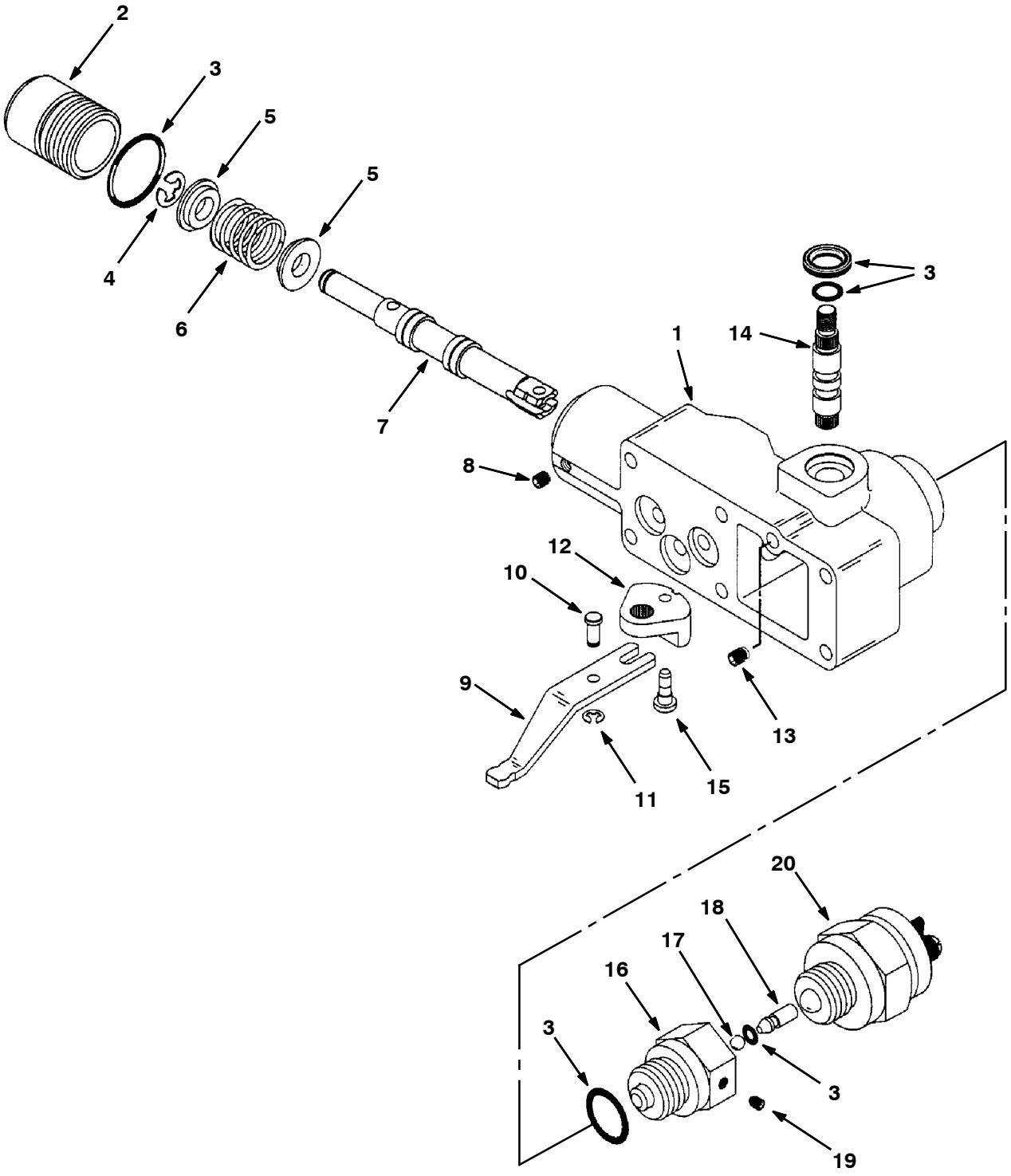

10139 - ALL

Fig. 10 - Hydraulic Manual Control Breakdown, 373369

NOTE: Piston Pump, TENNANT Part Number 74164, includes Fig. 6, Fig. 7 and Fig. 10.

NOTE: Piston Pump, TENNANT Part Number 373405, includes Fig. 8, Fig. 9 and Fig. 10.

	Ref.	Part No.	Serial Number		Description	Qty.
▽		373369	(000000-	)	Manual Control En	1
▲	1	79777	(000000-	)	Housing,Control En	1
▲	2	79755	(000000-	)	Plug En	1
▲	3	79776	(000000-	)	Seal Kit,Cntrl En	1
▲	4	79756	(000000-	)	Ring, Retaining En	1
▲	5	79757	(000000-	)	Spring,Retainer En	2
▲	6	79758	(000000-	)	Spring, Cntr En	1
▲	7	79772	(000000-	)	Vlv Spool Wide En	1
▲	8	79760	(000000-	)	Screw, Set En	1
▲	9	79761	(000000-	)	Link, Feedback En	1
▲	10	79762	(000000-	)	Dowel Pin En	1
▲	11	79763	(000000-	)	Ring, Retaining En	1
▲	12	79764	(000000-	)	Bell Crank En	1
▲	13	79765	(000000-	)	Screw, Set En	1
▲	14	79766	(000000-	)	Shaft, Input En	1
▲	15	79767	(000000-	)	Pin, Headed En	1
▲	16	373371	(000000-	)	Adaptor,Neutral En	1
▲	17	79774	(000000-	)	Ball En	1
▲	18	373372	(000000-	)	Pin, Cntrl Assy En	1
▲	19	79760	(000000-	)	Screw, Set En	1
▲	20	373373	(000000-	)	Switch,Lockout En	1

Fig. 11 - Hydraulic Gear Pump Breakdown, 62561

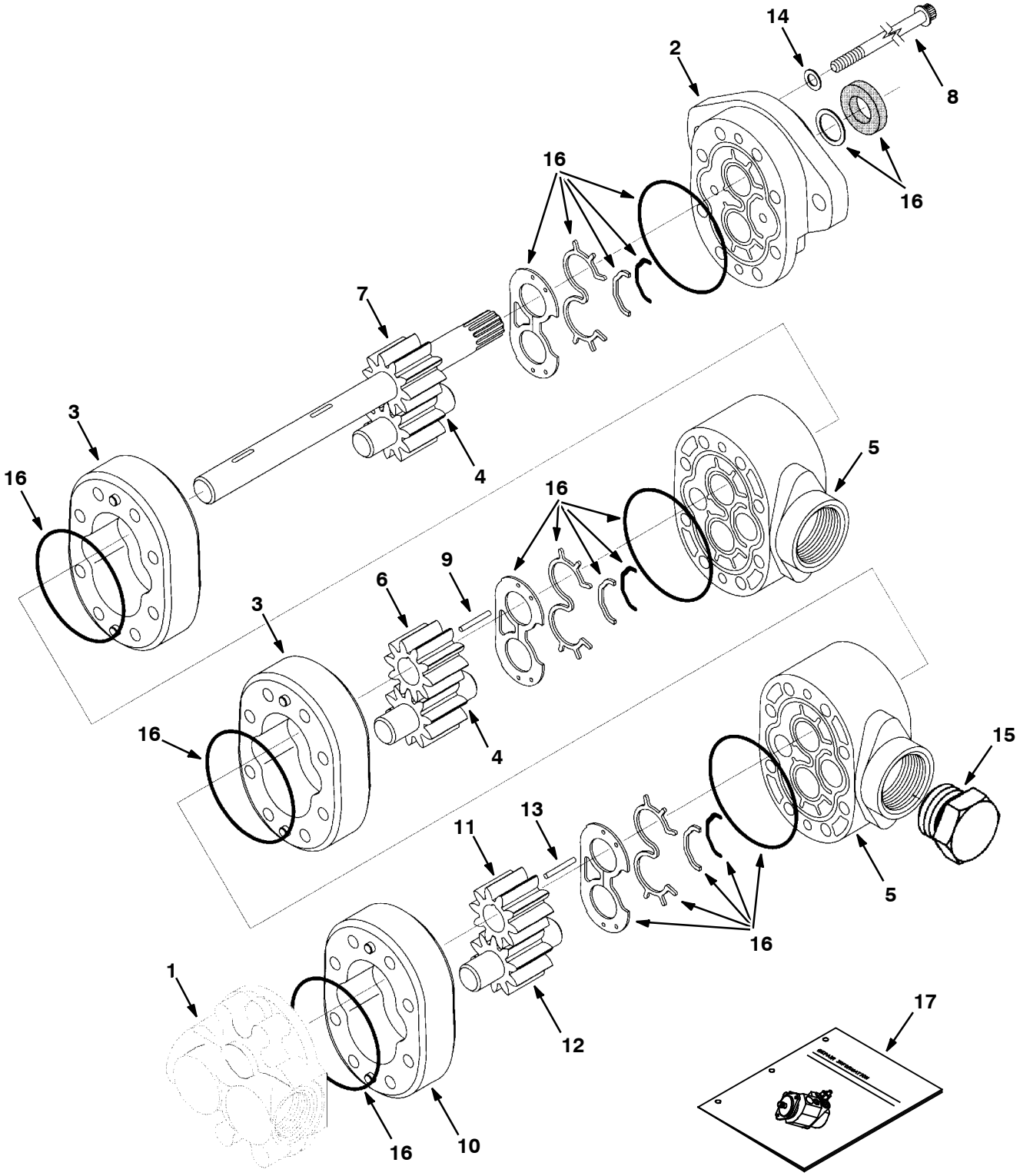

07488,09670 - ALL

Fig. 11 - Hydraulic Gear Pump Breakdown, 62561

	Ref.	Part No.	Serial Number	Description	Qty.
▽		62561	(000000-)	Pump, Hyd	1
▲	1	58242	(000000-)	Plate, Back	1
▲	2	74149	(000000-)	Plate, Front	1
▲	3	74150	(000000-)	Body Assy	2
▲	4	74151	(000000-)	Gear, Idler	2
▲	5	74152	(000000-)	Plate, Adapter	2
▲	6	74148	(000000-)	Gear, Slip Fit	1
▲	7	65226	(000000-)	Drive Gear Assembly	1
▲	8	74154	(000000-)	Screw, Cap	8
▲	9	74160	(000000-)	Key, Round	1
▲	10	74157	(000000-)	Body Assembly	1
▲	11	74153	(000000-)	Gear	1
▲	12	74158	(000000-)	Gear, Idler	1
▲	13	74156	(000000-)	Key, Round	1
▲	14	74159	(000000-)	Washer	4
▲	15	74161	(000000-)	Plug, O- ring	1
▲	16	59305	(000000-)	Kit, Seal, Hyd, Pump	1
	17	763483	(000000-)	Repair Info, Pump	1

Fig. 12 - Hydraulic Gear Pump Breakdown, 373254

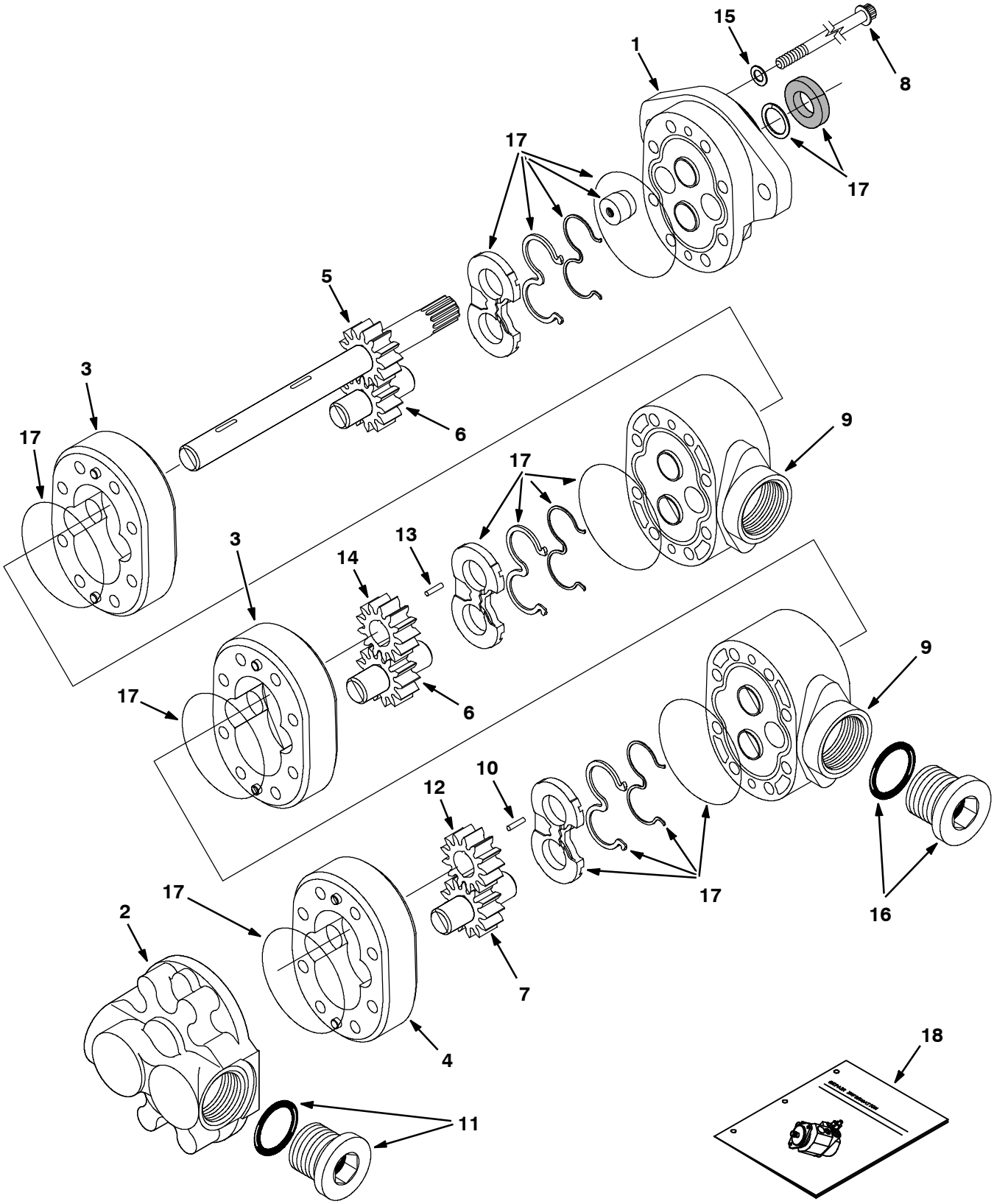

09670 - All

Fig. 12 - Hydraulic Gear Pump Breakdown, 373254

	Ref.	Part No.	Serial Number	Description	Qty.
▽		373254	(000000-)	Pump, Hyd, Gear, [Ex3] 0.66 [R] 3000	1
▲	1	373201	(000000-)	Plate, Front, Pump, Hyd	1
▲	2	373276	(000000-)	Plate, Back, Pump, Hyd	1
▲	3	373232	(000000-)	Housing	1
▲	4	373256	(000000-)	Body	2
▲	5	373457	(000000-)	Gear, Drive	1
▲	6	373211	(000000-)	Gear Assy, Idler	1
▲	7	373258	(000000-)	Gear, Idler	2
▲	8	74154	(000000-)	Screw, Cap, Motor, Hyd	8
▲	9	373235	(000000-)	Plate, Adaptor	2
▲	10	373458	(000000-)	Key	1
▲	11	71725	(000000-)	Plug, O- Ring	1
▲	12	373259	(000000-)	Gear, [Slip Fit]	1
▲	13	373284	(000000-)	Key	1
▲	14	373242	(000000-)	Gear	1
▲	15	373243	(000000-)	Washer	4
▲	16	74161	(000000-)	Plug, O- Ring	1
▲	17	373255	(000000-)	Kit, Seal, Pump	1
	18	373207	(000000-)	Instr, Kit, Repair, Pump, Hyd	1

Fig. 13 - Hydraulic Motor Breakdown, 63426

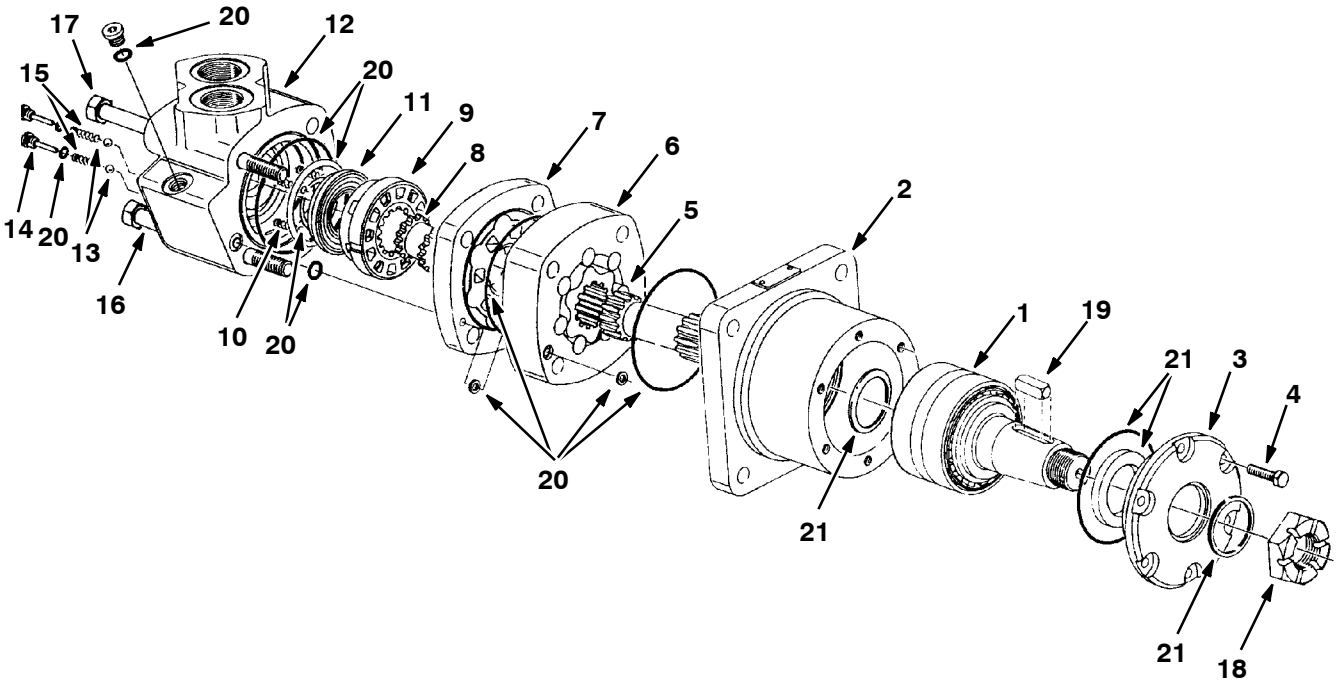

01655 - ALL

Fig. 13 - Hydraulic Motor Breakdown, 63426

	Ref.	Part No.	Serial Number		Description	Qty.
▽		63426	(000000-	)	Motor, Propelling	1
▲	1	34180	(000000-	)	Shaft and Brg	1
▲	2	74132	(000000-	)	Housing, Brg	1
▲	3	74133	(000000-	)	Retainer, Frt	1
▲	4	37943	(000000-	)	Bolt	6
▲	5	34181	(000000-	)	Drive	1
▲	6	34182	(000000-	)	Gerotor Set	1
▲	7	34184	(000000-	)	Valve Plate	1
▲	8	34183	(000000-	)	Drive, Valve	1
▲	9	34185	(000000-	)	Valve	1
▲	10	34178	(000000-	)	Spring	3
▲	11	37723	(000000-	)	Plate	1
▲	12	74134	(000000-	)	Housing Assy	1
▲	13	37766	(000000-	)	Ball	2
▲	14	74137	(000000-	)	Plug Assembly	2
▲	15	34179	(000000-	)	Spring	2
▲	16	74135	(000000-	)	Screw, Cap	2
▲	17	74136	(000000-	)	Screw, Cap	2
▲	18	45622	(000000-	)	Nut	1
▲	19	45623	(000000-	)	Key	1
▲	20	40380	(000000-	)	Seal Kit, Motor	1
▲	21	65227	(000000-	)	Seal Kit, Shaft	1

Fig. 14 - Hydraulic Motor Breakdown, 22626

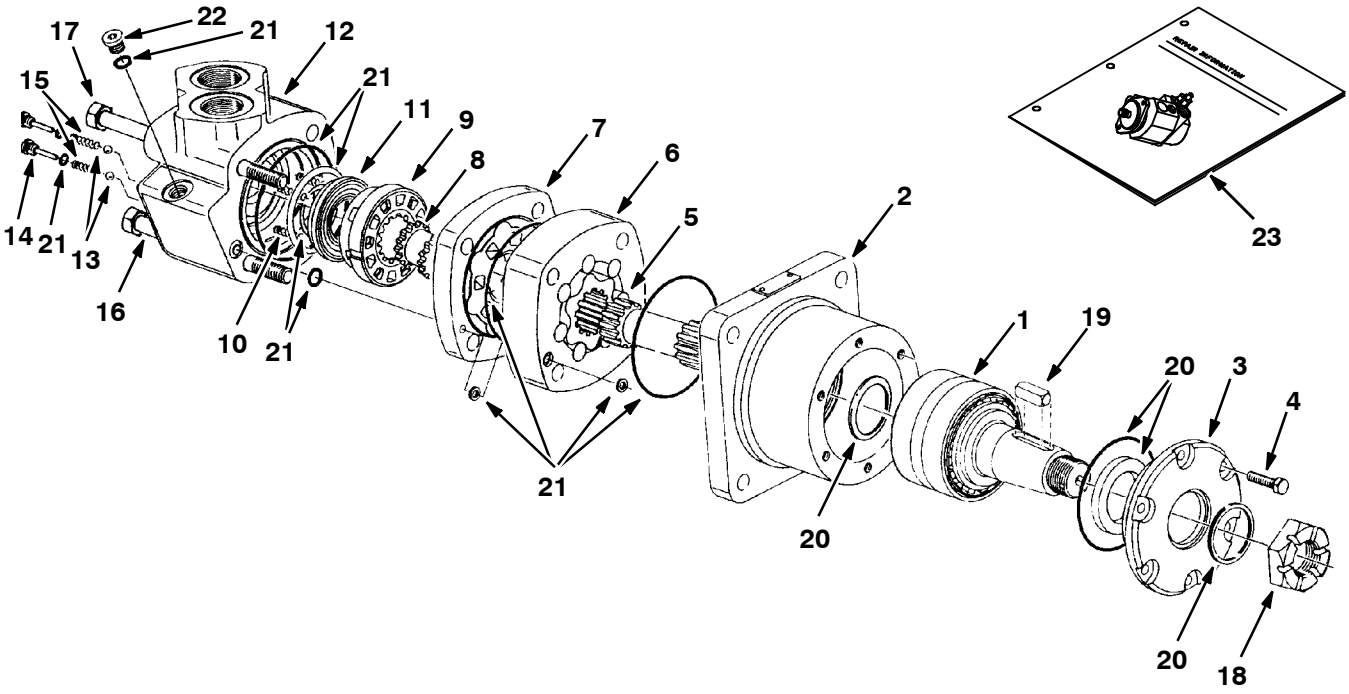

01655,09670 - ALL

Fig. 14 - Hydraulic Motor Breakdown, 22626

	Ref.	Part No.	Serial Number		Description	Qty.
▽		22626	(000000-	)	Motor, Propelling	1
▲	1	22629	(000000-	)	Shaft and Brg	1
▲	2	22630	(000000-	)	Housing, Brg	1
▲	3	22636	(000000-	)	Retainer, Frt	1
▲	4	37943	(000000-	)	Bolt	6
▲	5	34181	(000000-	)	Drive	1
▲	6	74214	(000000-	)	Gerotor Set	1
▲	7	34184	(000000-	)	Valve Plate	1
▲	8	34183	(000000-	)	Drive, Valve	1
▲	9	34185	(000000-	)	Valve	1
▲	10	34178	(000000-	)	Spring	3
▲	11	37723	(000000-	)	Plate	1
▲	12	74134	(000000-	)	Housing Assy	1
▲	13	37766	(000000-	)	Ball	2
▲	14	74137	(000000-	)	Plug Assembly	2
▲	15	34179	(000000-	)	Spring	2
▲	16	74135	(000000-	)	Screw, Cap	2
▲	17	74136	(000000-	)	Screw, Cap	2
▲	18	45622	(000000-	)	Nut	1
▲	19	45623	(000000-	)	Key	1
▲▽	20	22645	(000000-	)	Seal Kit, Shaft	1
▲▲	21	22646	(000000-	)	Seal Kit, Motor	1
▲▲		74220	(000000-	)	Seal Kit, Rear	1
▲	22	74098	(000000-	)	Plug, O- Ring	1
	23	74246	(000000-	)	Repair Info, Motor	1

Fig. 15 - Hydraulic Motor Breakdown, 373464

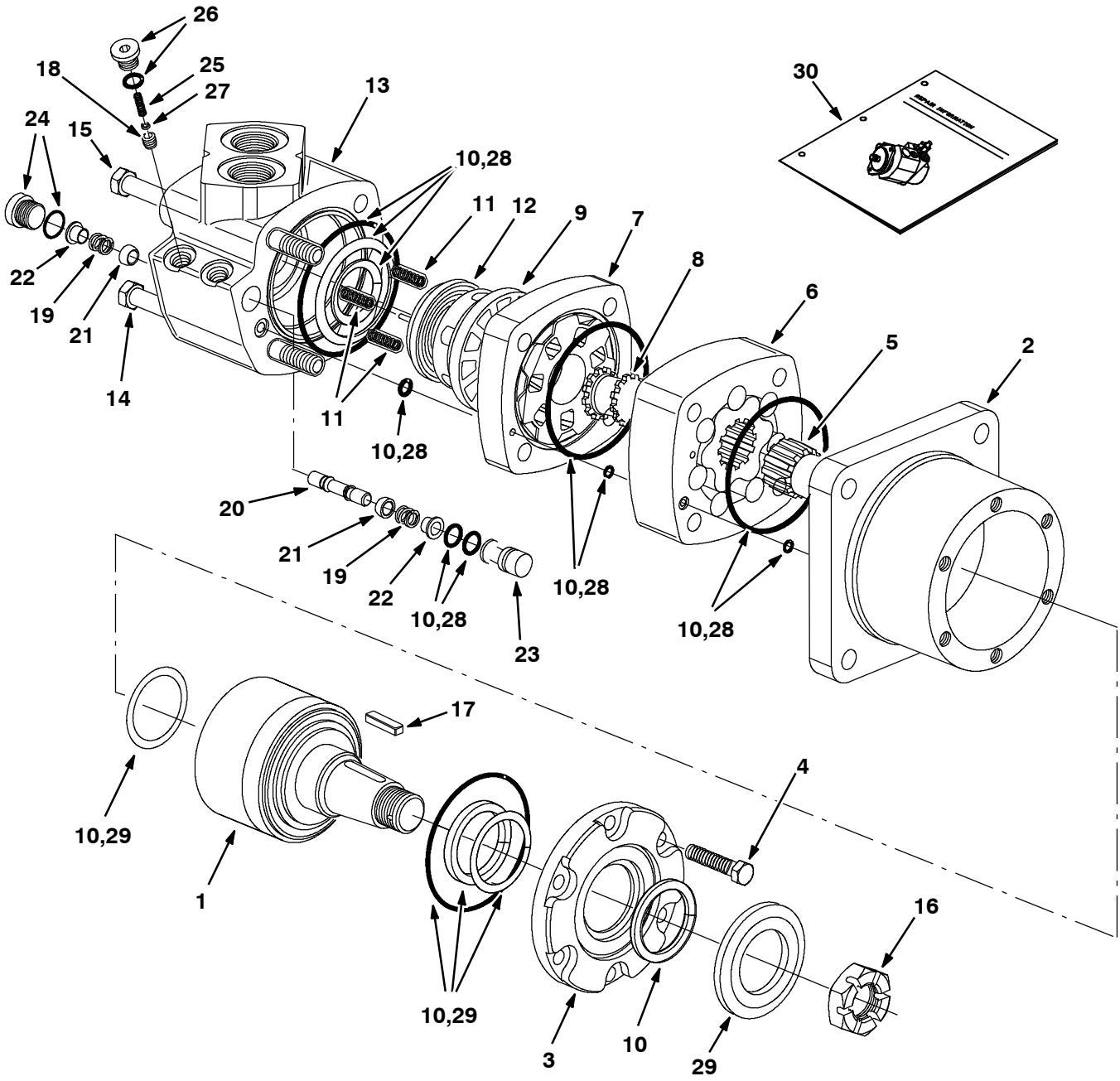

ALL

Fig. 15 - Hydraulic Motor Breakdown, 373464

	Ref.	Part No.	Serial Number	Description	Qty.
▽		373464	(000000-)	Motor, Hyd, Gear, [In] 29.9 B 3000	1
▲	1	22629	(000000-)	Shaft, Motor, Hyd	1
▲	2	22630	(000000-)	Housing, Bearing, Motor, Hyd	1
▲	3	22636	(000000-)	Retainer, Front, Motor, Hyd	1
▲	4	37943	(000000-)	Bolt, Motor, Hyd	6
▲	5	34181	(000000-)	Drive, Motor, Hyd	1
▲	6	74214	(000000-)	Geroler Set, Motor, Hyd	1
▲	7	34184	(000000-)	Plate, Valve, Motor, Hyd	1
▲	8	34183	(000000-)	Valve, Drive, Motor, Hyd	1
▲	9	373541	(000000-)	Valve	1
▲	10	22646	(000000-)	Kit, Seal, Motor, Hyd	1
▲	11	34178	(000000-)	Spring, Motor, Hyd	3
▲	12	37723	(000000-)	Plate, Motor, Hyd	1
▲	13	373549	(000000-)	Housing, Valve	1
▲	14	74135	(000000-)	Screw, Cap, Motor, Hyd	2
▲	15	74136	(000000-)	Screw, Cap, Motor, Hyd	2
▲	16	45622	(000000-)	Nut, Motor, Hyd	1
▲	17	45623	(000000-)	Key, Motor, Hyd	1
▲	18	373542	(000000-)	Poppet	1
▲	19	373291	(000000-)	Spring	2
▲	20	373543	(000000-)	Piston	1
▲	21	373226	(000000-)	Poppet, Pump, Hyd, Gear	2
▲	22	373236	(000000-)	Sleeve, Dashpo, Pump, Hyd, Gear	2
▲	23	373544	(000000-)	Plug	1
▲	24	373545	(000000-)	Plug Assy	1
▲	25	373546	(000000-)	Spring	1
▲	26	373547	(000000-)	Plug Assy	1
▲	27	373548	(000000-)	Shim	1
▲	28	74220	(000000-)	Kit, Seal, Hyd, Motor	1
▲	29	22645	(000000-)	Kit, Seal, Motor, Hyd	1
	30	74246	(000000-)	Repair Info,Mtr Cl	1

Fig. 16 - Hydraulic Motor Breakdown, 53434

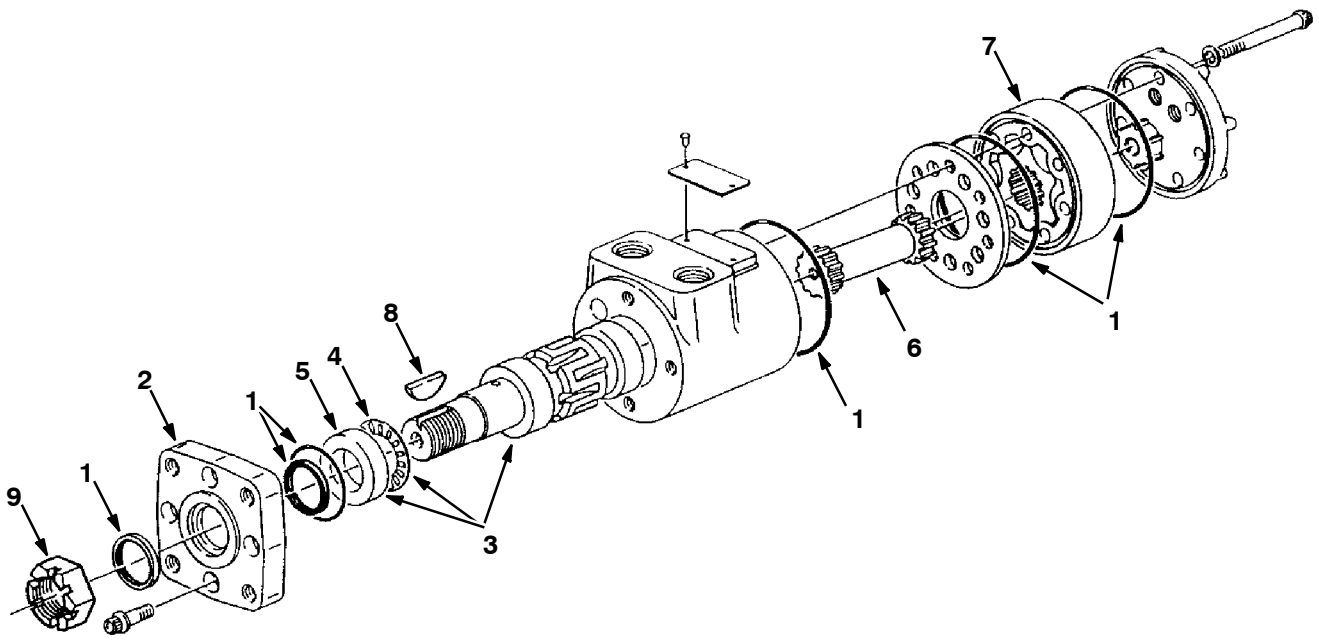

05348 - ALL

	Ref.	Part No.	Serial Number		Description	Qty.
▽		53434	(000000-	)	Motor, Hydraulic	1
▲	1	61490	(000000-	)	Seal Kit	1
▲	2	31354	(000000-	)	Flange, Mounting	1
▲▽	3	58278	(000000-	)	Output Shaft Assembly	1
▲▲	4	45628	(000000-	)	Bearing	1
▲▲	5	16695	(000000-	)	Race, Thrust	1
▲	6	34176	(000000-	)	Drive	1
▲	7	58270	(000000-	)	Gerotor Set	1
▲	8	00500-15	(000000-	)	Key, Woodruff	1
▲	9	39527	(000000-	)	Nut, Slotted Hex	1

Fig. 17 - Hydraulic Motor Breakdown, 79781

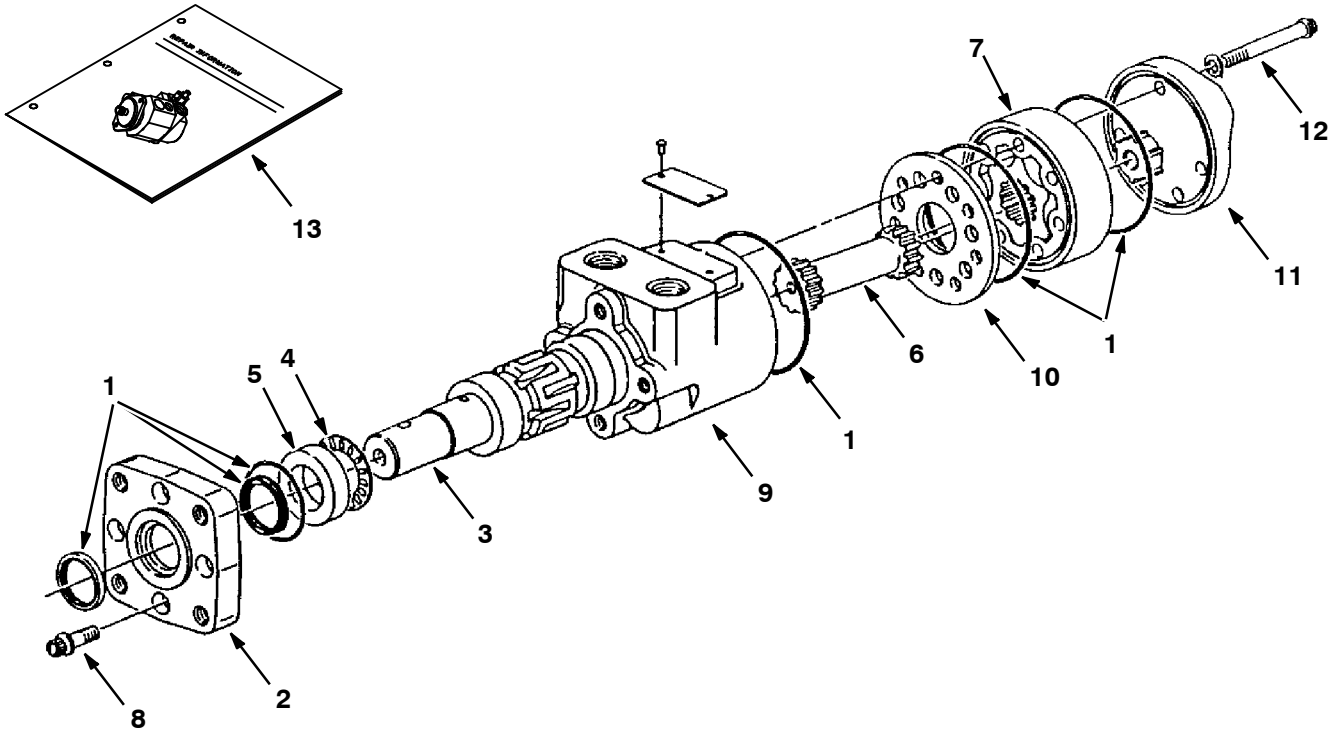

07716,09670 - ALL

	Ref.	Part No.	Serial Number		Description	Qty.
▽		79781	(000000-	)	Motor, Hydraulic	1
▲	1	61490	(000000-	)	Seal Kit	1
▲	2	79782	(000000-	)	Flange, Mounting	1
▲	3	16694	(000000-	)	Shaft	1
▲	4	45628	(000000-	)	Bearing Thrust	1
▲	5	16695	(000000-	)	Race, Thrust	1
▲	6	31380	(000000-	)	Drive	1
▲	7	31385	(000000-	)	Gerotor Set	1
▲	8	37555	(000000-	)	Screw	4
▲	9	74100	(000000-	)	Housing	1
▲	10	74094	(000000-	)	Spacer Plate	1
▲	11	74101	(000000-	)	End Cap	1
▲	12	65232	(000000-	)	Cap Screw	5
▲	13	74250	(000000-	)	Repair Info, Motor	1

Fig. 18 - Hydraulic Motor Breakdown, 19117

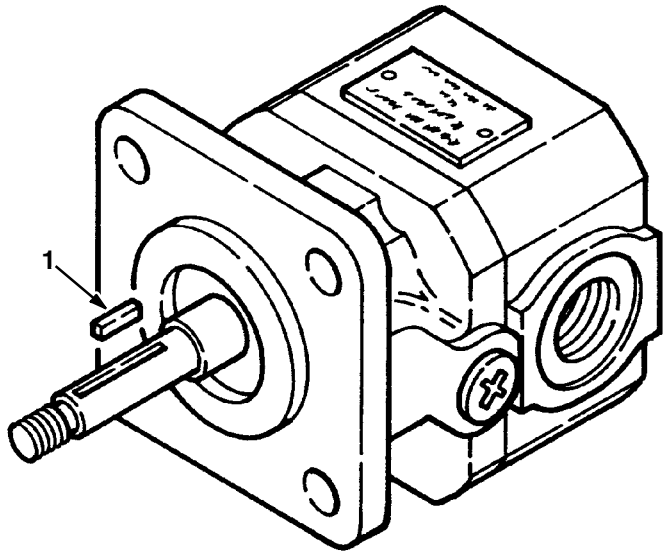

05190 - ALL

	Ref.	Part No.	Serial Number		Description	Qty.
▽		19117	(000000-	)	Motor, Hydraulic	1
▲	1	00954	(000000-	)	Key	1
▲		74233	(000000-	)	Seal Kit	1

Fig. 19 - Hydraulic Motor Breakdown, 63542

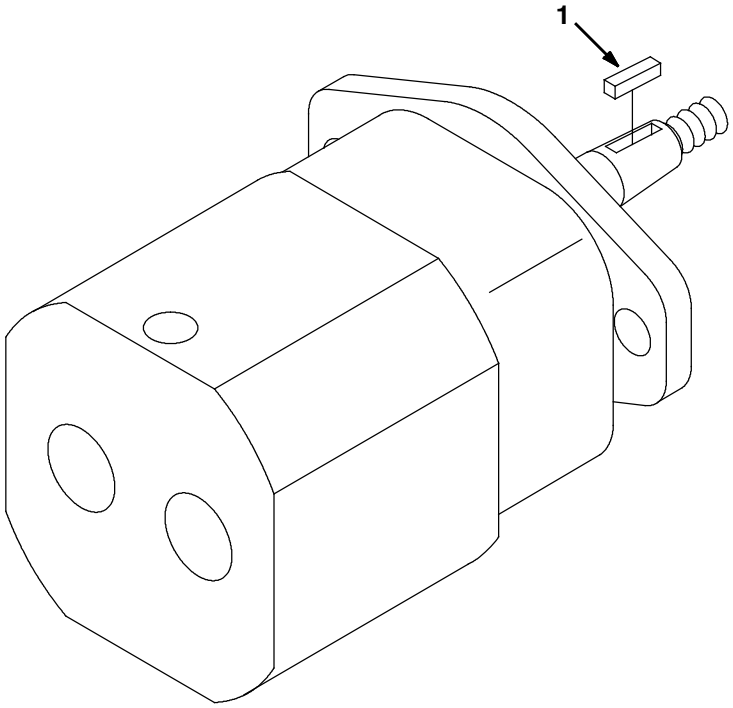

10556 - ALL

	Ref.	Part No.	Serial Number		Description	Qty.
▽		63542	(000000-	)	Motor, Hydraulic	1
▲	1	00960	(000000-	)	Key, Square 0.12 0.12 00.50 LG	1
▲		74233	(000000-	)	Seal Kit, Hyd Mtr Gear	1

Fig. 20 - Hydraulic Steering Valve Breakdown, 65242

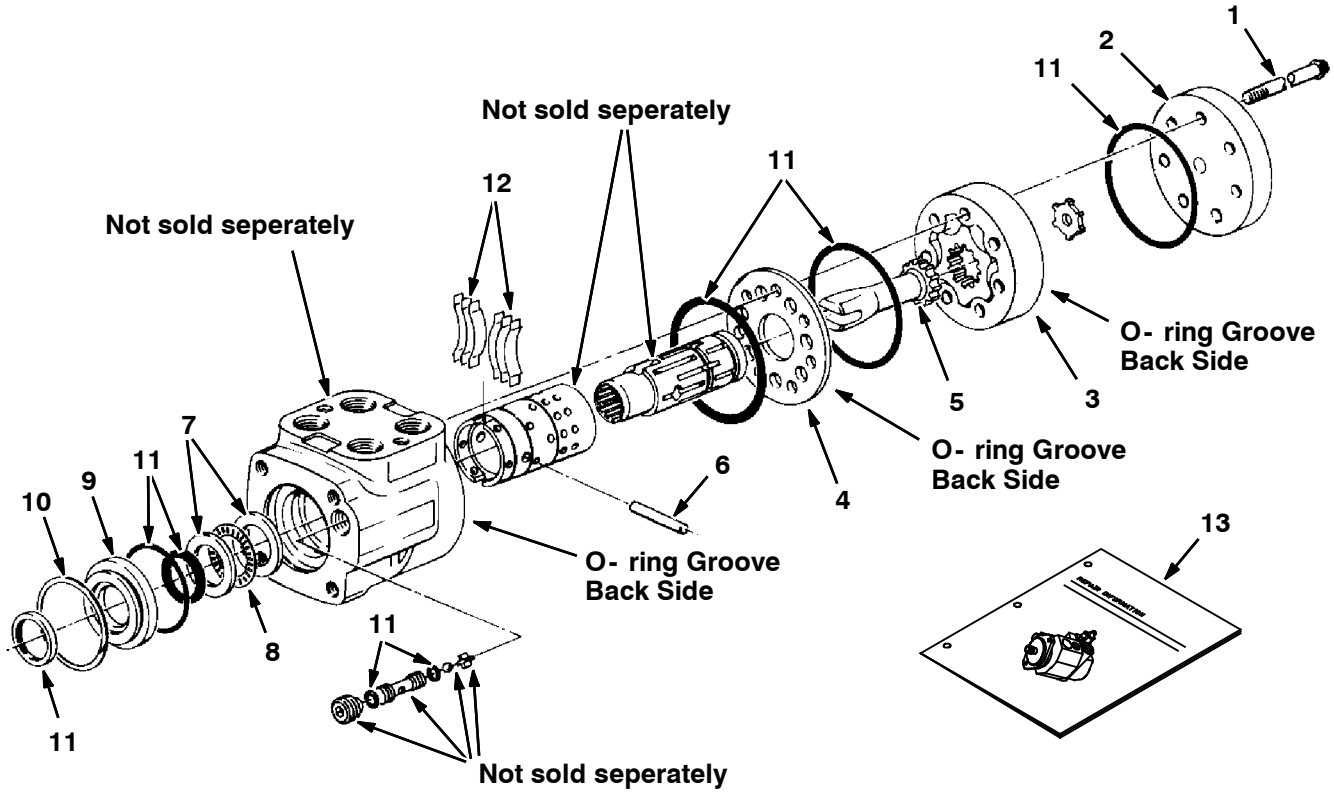

09936- 09670- ALL

Fig. 20 - Hydraulic Steering Valve Breakdown, 65242

	Ref.	Part No.	Serial Number		Description	Qty.
▽		65242	(000000-	)	Steer Control Hyd#4 04.5 1300	1
▲	1	74174	(000000-	)	Cap, Screw	6
▲	2	74194	(000000-	)	Cap, End	1
▲	3	65235	(000000-	)	Gerotor Set Cl	1
▲	4	74182	(000000-	)	Plate, Wear	1
▲	5	58596	(000000-	)	Drive	1
▲	6	74218	(000000-	)	Pin	1
▲	7	74109	(000000-	)	Race, Bearing	2
▲	8	74110	(000000-	)	Bearing, Needle	1
▲	9	74112	(000000-	)	Bushing, Seal	1
▲	10	74111	(000000-	)	Ring, Retainer	1
▲	11	74190	(000000-	)	Seal Kit, Scu	1
▲	12	74195	(000000-	)	Spring Kit	1
	13	74251	(000000-	)	Repair Info,Scu Cl	1

Fig. 21 - Hydraulic Solenoid Valve Breakdown, 84015

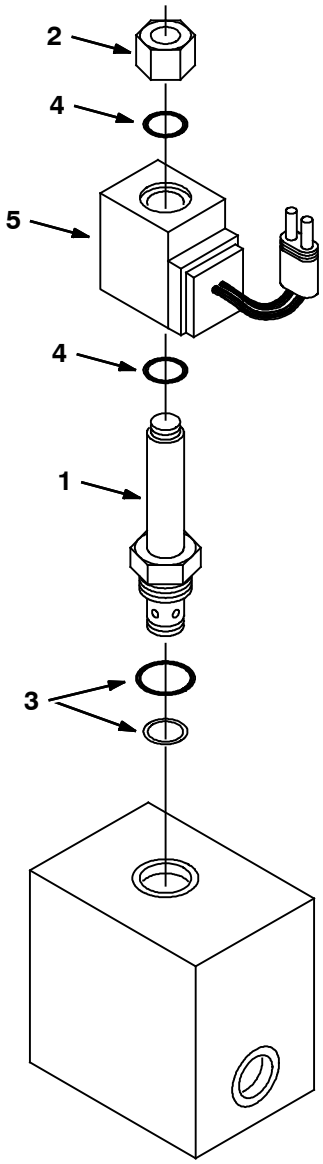

07639 - ALL

	Ref.	Part No.	Serial Number	Description	Qty.
▽		84015	(000000-)	Valve - Hyd., Solenoid	1
▲▽	1	79739	(000000-)	Valve Stem, N.D.	1
▲▲	2	79731	(000000-)	Nut, Cart., LNG.	1
▲▲	3	79711	(000000-)	Seal Kit, Cart.	1
▲▲	4	79740	(000000-)	Seal Kit, Coil	1
▲	5	21917	(000000-)	Coil, 12V W/Var	1

Fig. 22 - Hydraulic Solenoid Valve Breakdown, 84016

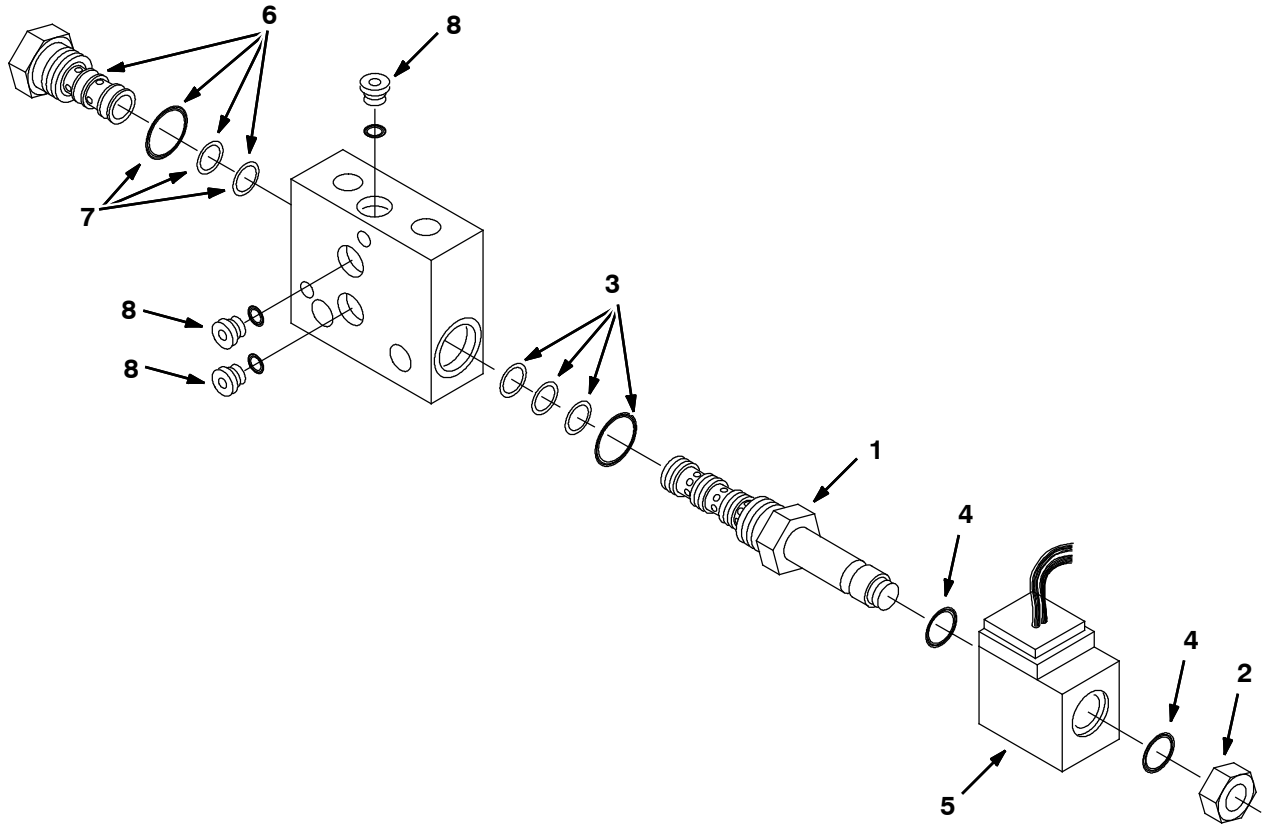

10499 - ALL

	Ref.	Part No.	Serial Number		Description	Qty.
▽		84016	(000000-	)	Valve, Hyd Control Solenoid	1
▲▽	1	79719	(000000-	)	Valve Stem 4W2P	1
▲▲	2	79728	(000000-	)	Nut, Cart., Sht	1
▲▲	3	79711	(000000-	)	Seal Kit, Cart	1
▲▲	4	79740	(000000-	)	Seal Kit, Coil	1
▲	5	21917	(000000-	)	Coil, 12V W/Var	1
▲▽	6	74145	(000000-	)	Cart, Pilot Cntr	1
▲▲	7	79711	(000000-	)	Seal Kit, Cart	1
▲	8	13902	(000000-	)	Plug, #2 O- Ring	3

Fig. 23 - Hydraulic Valve Breakdown, 375563

CONTROL VALVE	
Spool #1	Hopper Lift
Spool #2	Hopper Dump
Spool #3	Hopper Door

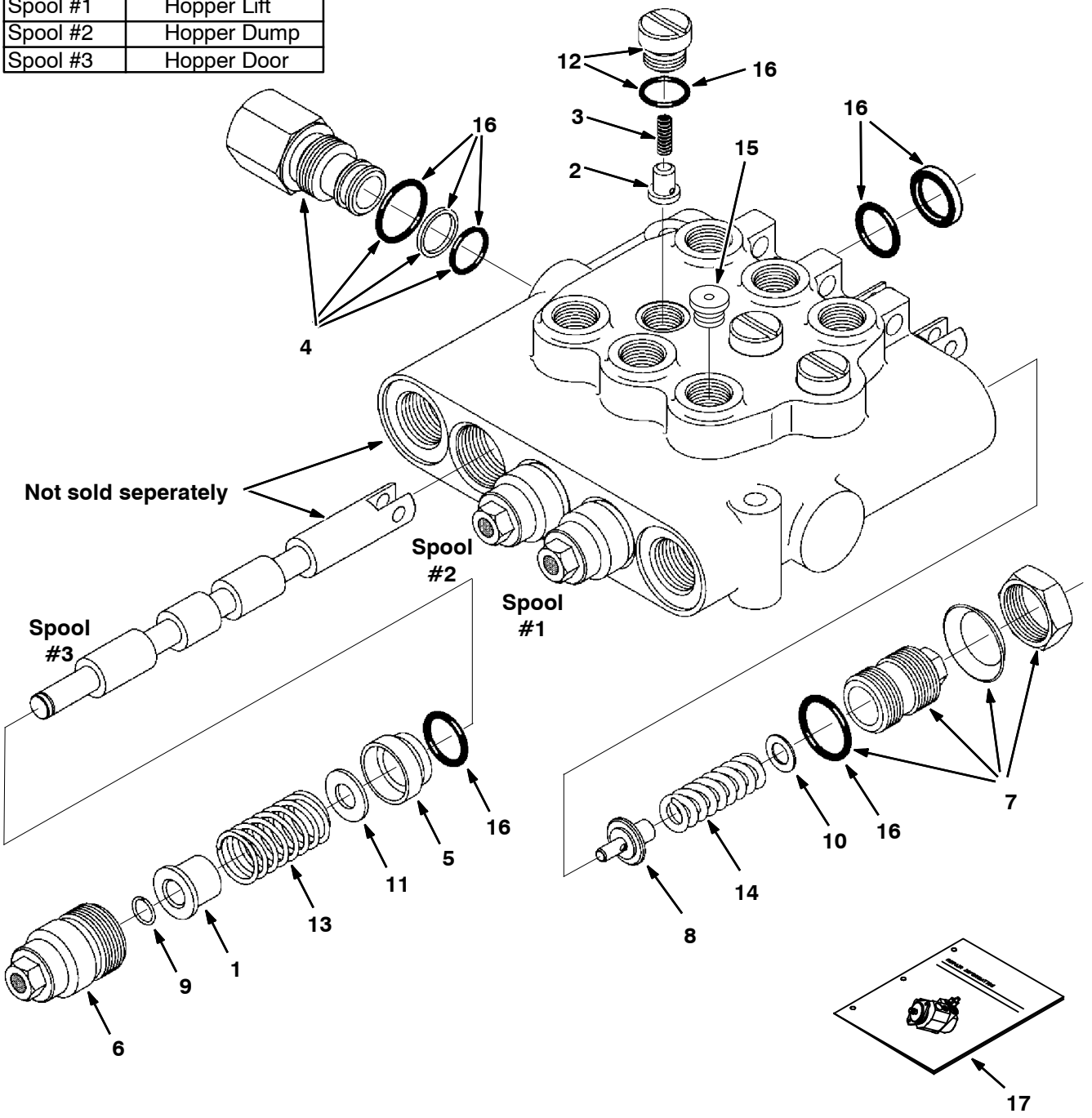

10408,09670 - ALL

Fig. 23 - Hydraulic Valve Breakdown, 375563

	Ref.	Part No.	Serial Number	Description	Qty.
▽		375563	(000000-)	Valve, Hyd Control Man	1
▲	1	79822	(000000-)	Spacer En	3
▲	2	79786	(000000-)	Plunger En	3
▲	3	79787	(000000-)	Spring En	3
▲	4	79823	(000000-)	Plug Assy,Byd En	1
▲	5	79788	(000000-)	Bushing En	3
▲	6	79789	(000000-)	Cap Assembly En	3
▲	7	79790	(000000-)	Plug Assembly En	1
▲	8	79791	(000000-)	Poppet En	1
▲	9	79792	(000000-)	Retaining Rng En	3
▲	10	79793	(000000-)	Shim .035 Thk En	1
▲	10	79798	(000000-)	Shim .015 Thk En	1
▲	10	79799	(000000-)	Shim .010 Thk En	1
▲	11	79794	(000000-)	Washer En	3
▲	12	79795	(000000-)	Plug & O- Ring En	3
▲	13	79824	(000000-)	Spring En	3
▲	14	79797	(000000-)	Spring En	1
▲	15	13904	(000000-)	Plug Gage #6	1
▲	16	79812	(000000-)	Seal Kit, Vlv En	1
▲	17	79820	(000000-)	Instr. Valve Repair Info	1

Fig. 24 - Hydraulic Solenoid Valve Breakdown, 84014

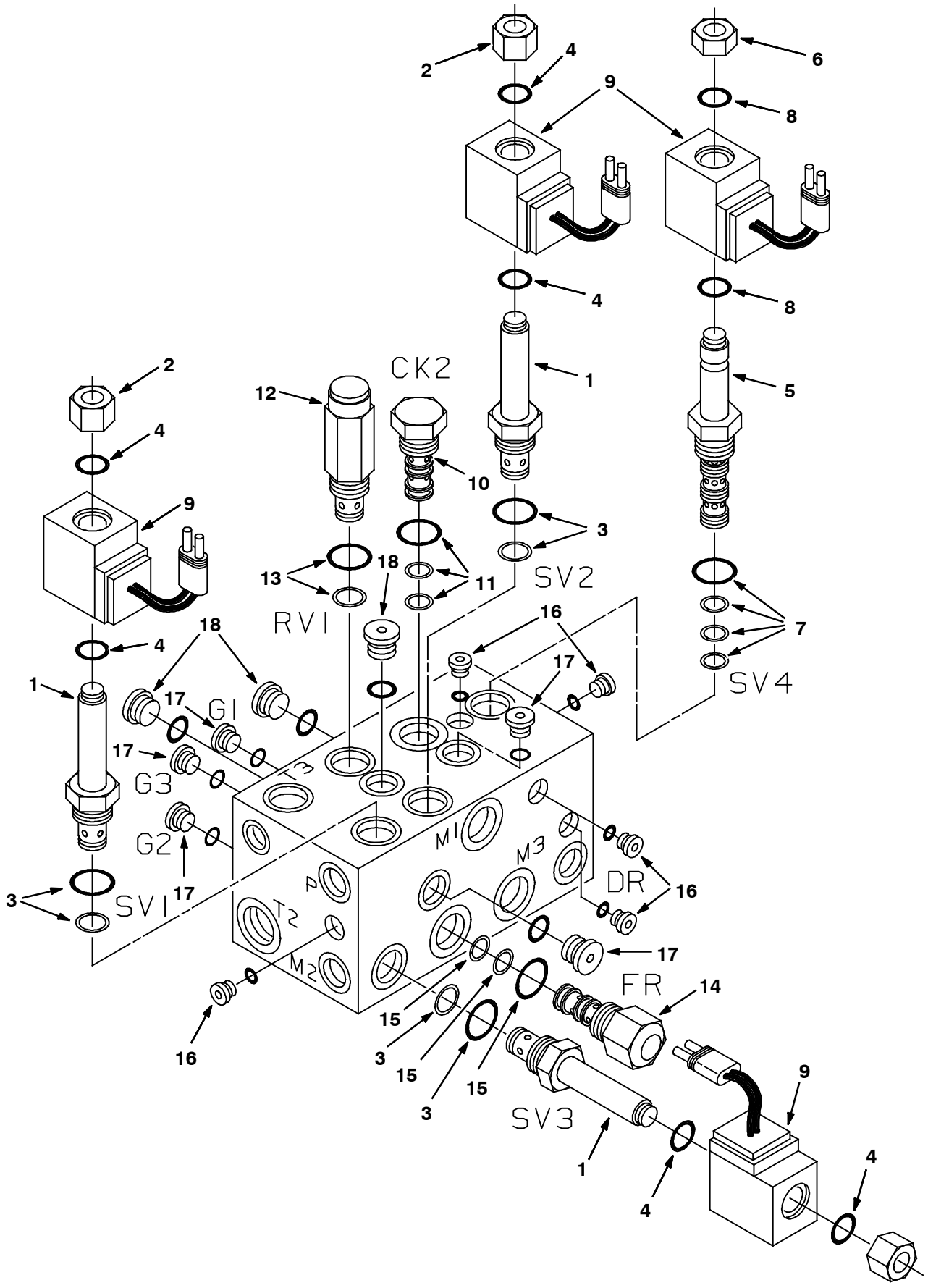

07644 - 800

Fig. 24 - Hydraulic Solenoid Valve Breakdown, 84014

	Ref.	Part No.	Serial Number	Description	Qty.
▽		84014	(000000-)	Valve, Hyd Control Solenoid	1
▲▽	1	79739	(000000-)	Valve Stem N.O. CP	3
▲▲	2	79731	(000000-)	Nut, Cart., LNG CP	1
▲▲	3	79711	(000000-)	Seal Kit, Cart CP	1
▲▲	4	79740	(000000-)	Seal Kit, Coil CP	1
▲▽	5	79719	(000000-)	Valve Stem 4W2P CP	1
▲▲	6	79728	(000000-)	Nut, Cart., SHT CP	1
▲▲	7	79711	(000000-)	Seal Kit, Cart CP	1
▲▲	8	79740	(000000-)	Seal Kit, Coil CP	1
▲	9	21917	(000000-)	Coil 12V w/Var CP	4
▲▽	10	74146	(000000-)	Cart, Check Valve CP	1
▲▲	11	79711	(000000-)	Seal Kit, Cart CP	1
▲▽	12	65240	(000000-)	Cart, PSI CN CP	1
▲▲	13	79711	(000000-)	Seal Kit, Cart CP	1
▲▽	14	74268	(000000-)	Cart Flow Control CP	1
▲▲	15	79711	(000000-)	Seal Kit, Cart CP	1
▲	16	13902	(000000-)	Plug #2	6
▲	17	74098	(000000-)	Plug Gage #4	5
▲	18	13904	(000000-)	Plug Gage #6	3

Fig. 25 - Hydraulic Cylinder Breakdown, 53601

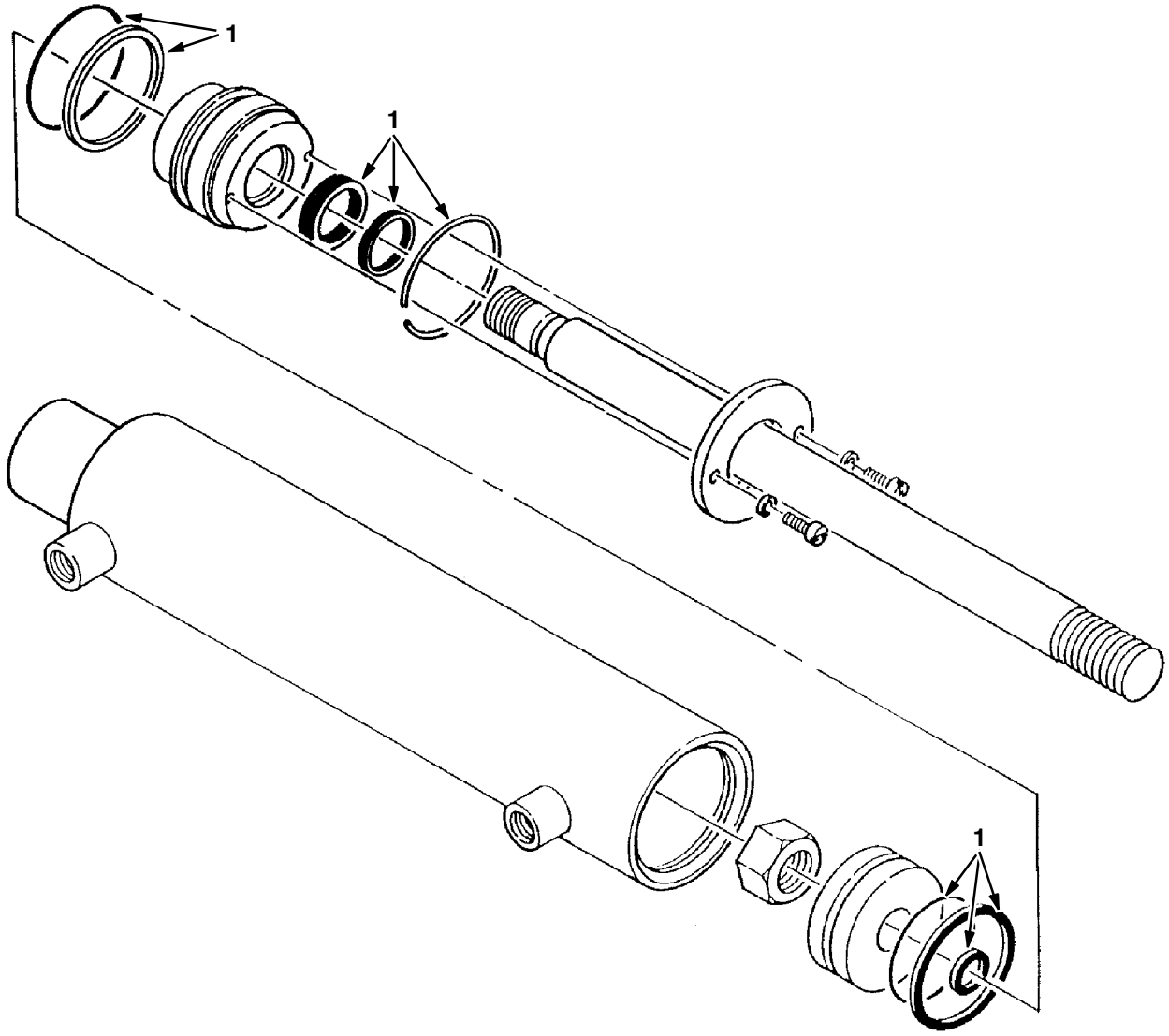

07494 - ALL

	Ref.	Part No.	Serial Number		Description	Qty.
▽		53601	(000000-	)	Cylinder, Hyd, 2.0b,15.0l, Rep.By1028492	1
▲	1	04483	(000000-	)	Seal Kit	1

Fig. 26 - Hydraulic Cylinder Breakdown, 1026719

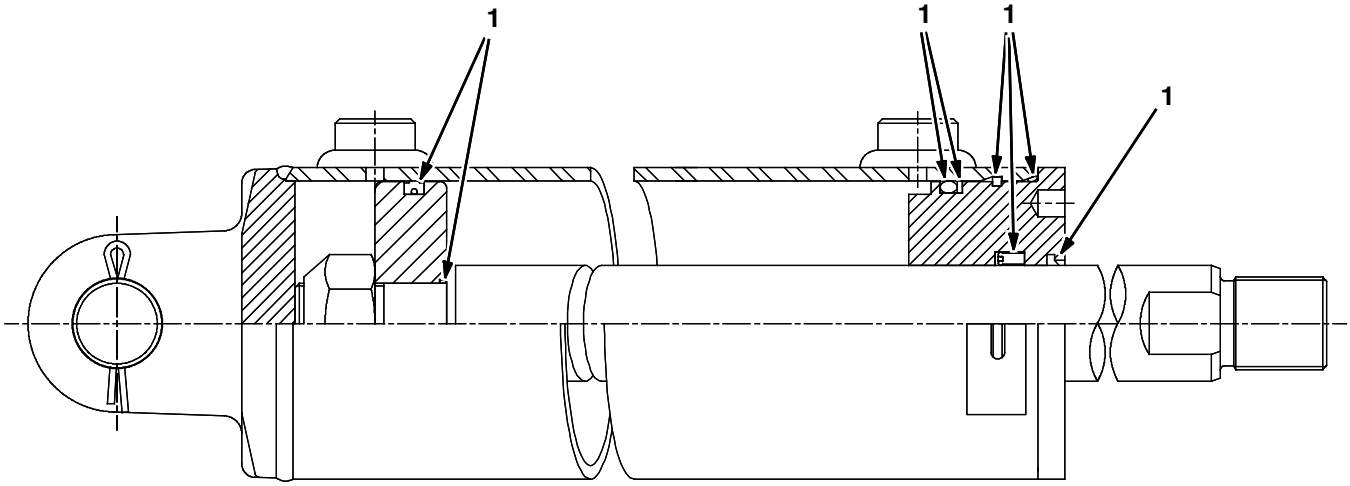

354486 - ALL

	Ref.	Part No.	Serial Number		Description	Qty.
▽		1026719	(000000-	)	Cylinder, Hyd, 4.0b 29.1l 14.50strk 2500	1
▲	1	9001702	(000000-	)	Seal Kit, Cyl, Hyd	1

Fig. 27 - Cab Assembly

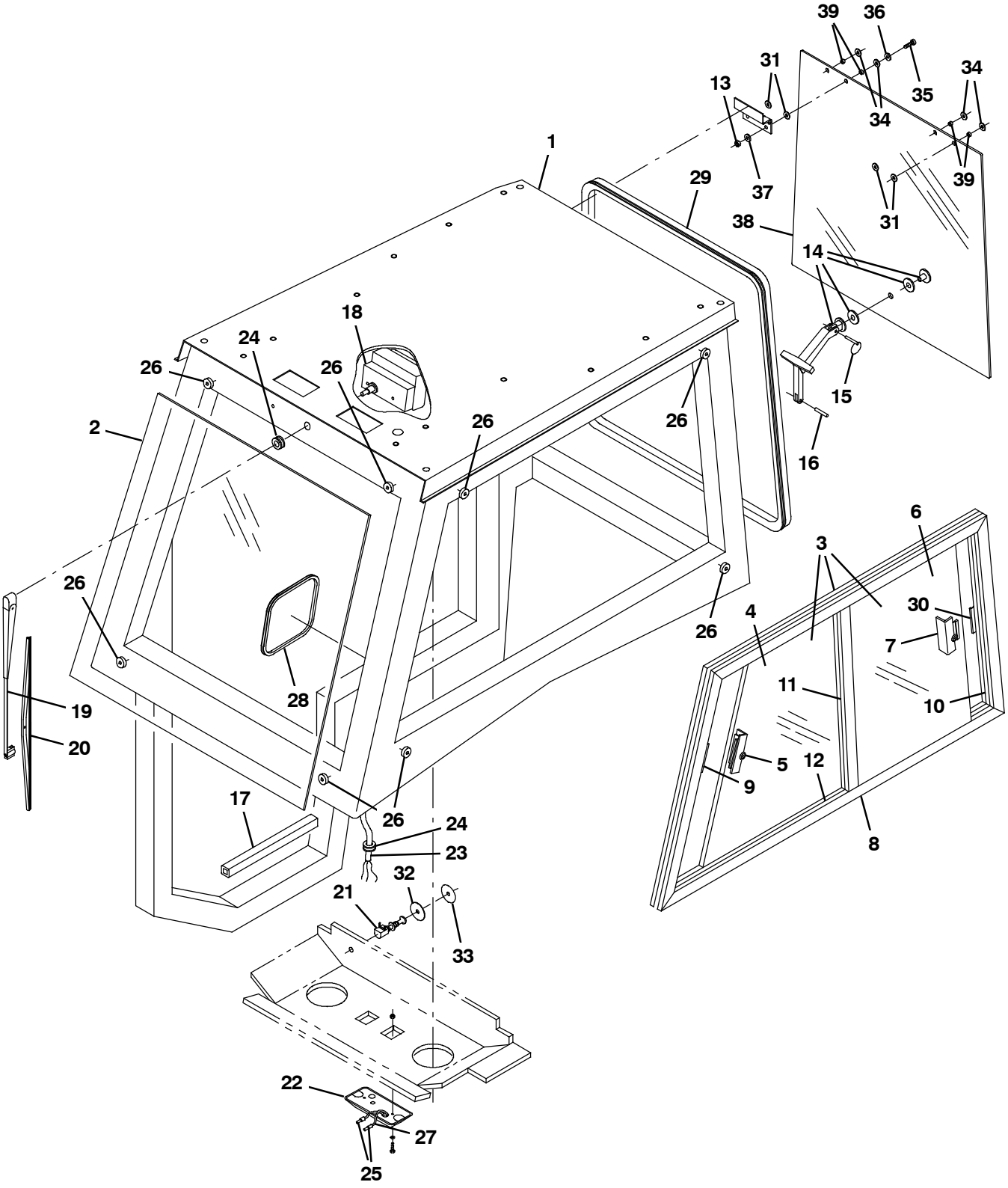

353528 - ALL

Fig. 27 - Cab Assembly

NOTE: The Cab Assembly, TENNANT Part Number 9007651 includes Fig. 27, Fig. 28, Fig. 30, and .Fig. 31

NOTE: The Cab Assembly, TENNANT Part Number 9012887 includes Fig. 27, Fig. 29, Fig. 30, and .Fig. 31

	Ref.	Part No.	Serial Number		Description	Qty.
	1	1057434	(000000-	)	Cab Wldt, 800	1
	1	1073930	(000000-	)	Cab Wldt [800 Gray]	1
	2	1059997	(000000-	)	Pane, Glass, Windshield	1
▽	3	1062707	(000000-	)	Pane Assy, Cab, Lh Side	1
▲▽	4	1064896	(000000-	)	Pane, Glass, Cab	1
▲▲	5	1068804	(000000-	)	Latch Assy, Wndw [800 Cab]	1
▲▽	6	1064895	(000000-	)	Pane, Glass, Cab	1
▲▲	7	1068804	(000000-	)	Latch Assy, Wndw [800 Cab]	1
▲▽	8	21309	(000000-	)	Frame, Pane, Cab, Side	1
▲▲	9	374765	(000000-	)	Keeper, Latch, Pane	1
▲	10	1069298	(000000-	)	Seal Stop, Wndw	1
▲	11	1069309	(000000-	)	Seal, Wndw [Center Wipe]	1
▲	12	1069305	(000000-	)	Channel, Seal, Wndw	1
	13	08712	(000000-	)	Nut, Hex, Lock, M6 X 1.00, Nl, Ss	4
	14	1058259	(000000-	)	Latch Kit, Wndw, Cab, Rear	1
	15	1062119	(000000-	)	Ring, Wndw, Cab, Rear	1
	16	1065921	(000000-	)	Pin, Roll, .187 Dia. X .56	1
	17	1061492	(000000-	)	Seal, Door, Rbr, 14” Lg	1
	18	311303	(000000-	)	Motor, Ele, Wiper, 12vdc	1
	19	1062083	(000000-	)	Arm, Wiper, Windshield	1
	20	1062084	(000000-	)	Blade, Wiper, Windshield	1
	21	1062092	(000000-	)	Switch, Motor, Wiper, 12v	1
▽	22	76996	(000000-	)	Light, Dome 12V	1
▲		374759	(000000-	)	Lamp	1
	23	380577	(000000-	)	Harness, Cab *(See Fig. 31)*	1
	24	10632- 14	(000000-	)	Grommet, Rbr, 1.00id, F/1.4h, .12 Matl	2
	25	50474	(000000-	)	Terminal, Qm, .25 16- 14ga, Blu, F- Ins	2
	26	64757	(000000-	)	Bumper, Rbr, Adh, 0.50d 0.14th	8
	27	77812	(000000-	)	Wire, Dome Light	2
	28	380692	(000000-	)	Molding, Trim (Gasoline only)	1
	29	1030593	(000000-	)	Seal, Afmkt, Bulb, 90, 0.75d F/11ga 08ft	1
	30	374294	(000000-	)	Latch, Keeper, Pane [J- dak]	1
	31	63416	(000000-	)	Washer, Flat, 0.31b 0.88d .12, Rbr	4
	32	1066313	(000000-	)	Plate, Sppt	1
	33	1066314	(000000-	)	Label, Opertnl, Switch, On- off	1
	34	1066218	(000000-	)	Washer, Flat, .28b 0.75d 1.80, Ne	4
	35	1065954	(000000-	)	Screw, Pan, Phl, M6 X 1.0 X 20, Blk	4
	36	397779	(000000-	)	Washer, Flat, 0.28b 1.00d .06, Stl, Blk	4
	37	32483	(000000-	)	Washer, Flat, 0.25, Sae	4
	38	1060000	(000000-	)	Glass, Pane, Windshield,800 Cab	1
	39	1061468	(000000-	)	Spacer, Nyl	4

Fig. 28 - Cab Door Assembly (000000-008088)

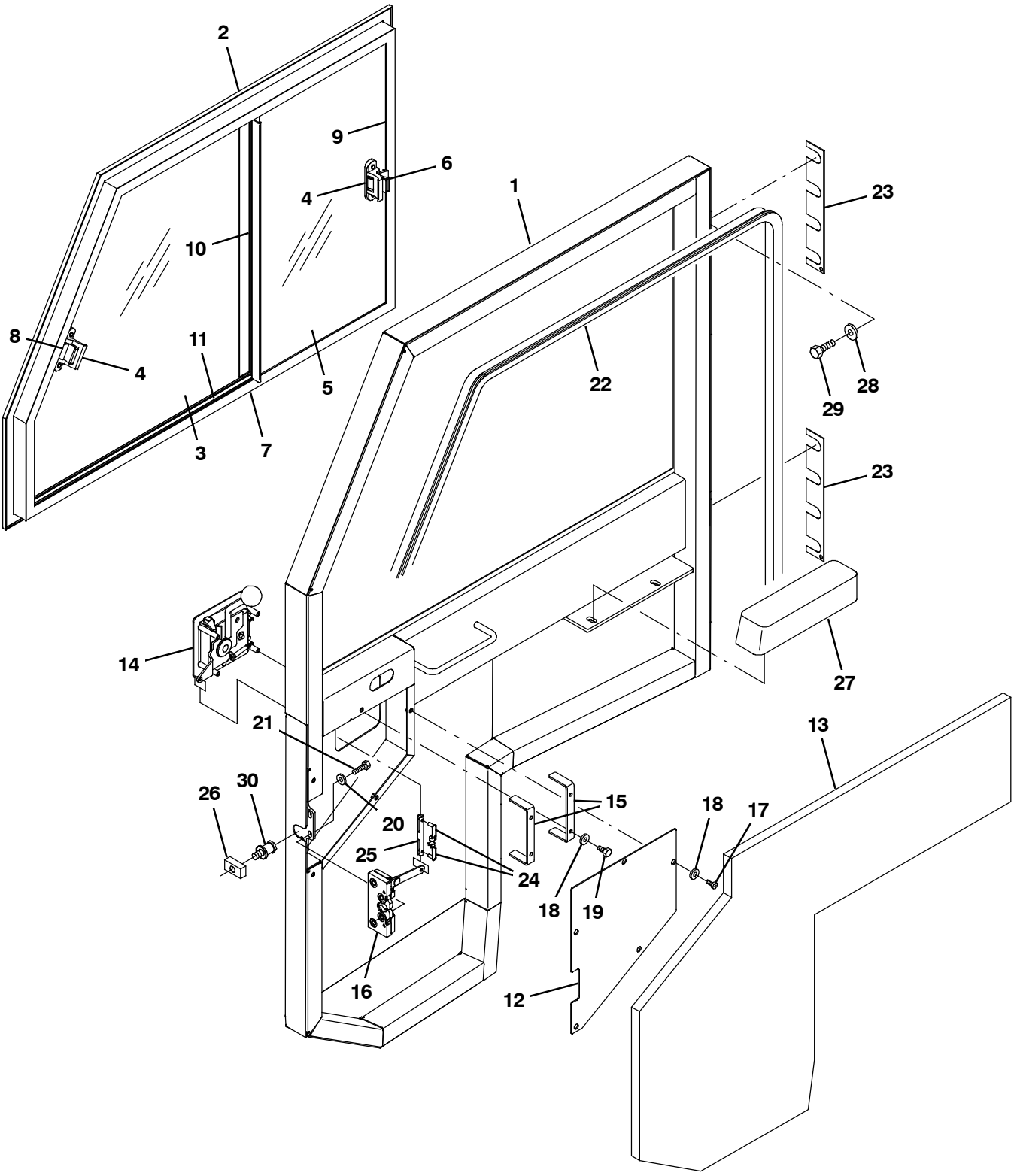

08784 - ALL

Fig. 28 - Cab Door Assembly (000000- 008088)

NOTE: The Cab Assembly, TENNANT Part Number 9007651 includes Fig. 27, Fig. 28, Fig. 30, and .Fig. 31

	Ref.	Part No.	Serial Number	Description	Qty.
▽		9009006	(000000- 008088)	Door Assy, Cab, Replmt [800]	1
▲	1	1057885	(000000- 008088)	Door Wldt, Cab	1
▲▽	2	1062708	(000000- 008088)	Pane Assy, Door, Cab, Rh Side	1
▲▲	3	1064893	(000000- 008088)	Pane, Glass, Door	1
▲▲	4	1068804	(000000- 008088)	Latch Assy, Wndw [800 Cab]	2
▲▲	5	1064894	(000000- 008088)	Pane, Glass, Door	1
▲▲	6	374294	(000000- 008088)	Latch, Keeper, Pane [J- dak]	1
▲▲	7	21313	(000000- 008088)	Frame, Pane, Door, Side	1
▲▲	8	374765	(000000- 008088)	Keeper, Latch, Pane	1
▲▲	9	1069298	(000000- 008088)	Seal Stop, Wndw	1
▲▲	10	1069309	(000000- 008088)	Seal, Wndw [Center Wipe]	2
▲▲	11	1069305	(000000- 008088)	Channel, Seal, Wndw	1
▲	12	1058309	(000000- 008088)	Cover, Latch Assy, Door	1
▲	13	1065909	(000000- 008088)	Insulation, Acstc, Door, Side	1
▲	14	1058254	(000000- 008088)	Latch Assy, Door	1
▲		21150	(000000- 008088)	Key Set	1
▲	15	1061447	(000000- 008088)	Bracket, Latch, Sppt	2
▲	16	1058256	(000000- 008088)	Lock Assy, Door	1
▲	17	06933	(000000- 008088)	Screw, Pan, Phl, M5 X 0.80 X 16, 4.8	5
▲	18	19066	(000000- 008088)	Washer, Flat, 0.25b 0.56d .05, Pl, 10	9
▲	19	42011	(000000- 008088)	Screw, Hex, 10- 24 X 0.50, Ss	4
▲	20	32483	(000000- 008088)	Washer, Flat, 0.25, Sae	3
▲	21	25046	(000000- 008088)	Screw, Hex, .25- 20 X 1.00, G5	3
▲	22	1030601	(000000- 008088)	Seal, Afmkt, Bulb, 90, 0.75d F/11ga 20ft	1
▲	23	1062143	(000000- 008088)	Plate, Shim	2
▲	24	1058258	(000000- 008088)	Clip, Retainer	2
▲	25	1058257	(000000- 008088)	Link, Connecting	1
	26	1061655	(000000- 008088)	Plate, Thrd	1
	27	311336	(000000- 008088)	Armrest, Black	1
	28	32492	(000000- 008088)	Washer, Flat, 0.38, Std	8
	29	06961	(000000- 008088)	Screw, Hex, M10 X 1.5	8
	30	58490	(000000- 008088)	Pin, Latch	1

Fig. 29 - Cab Door Assembly (008089-)

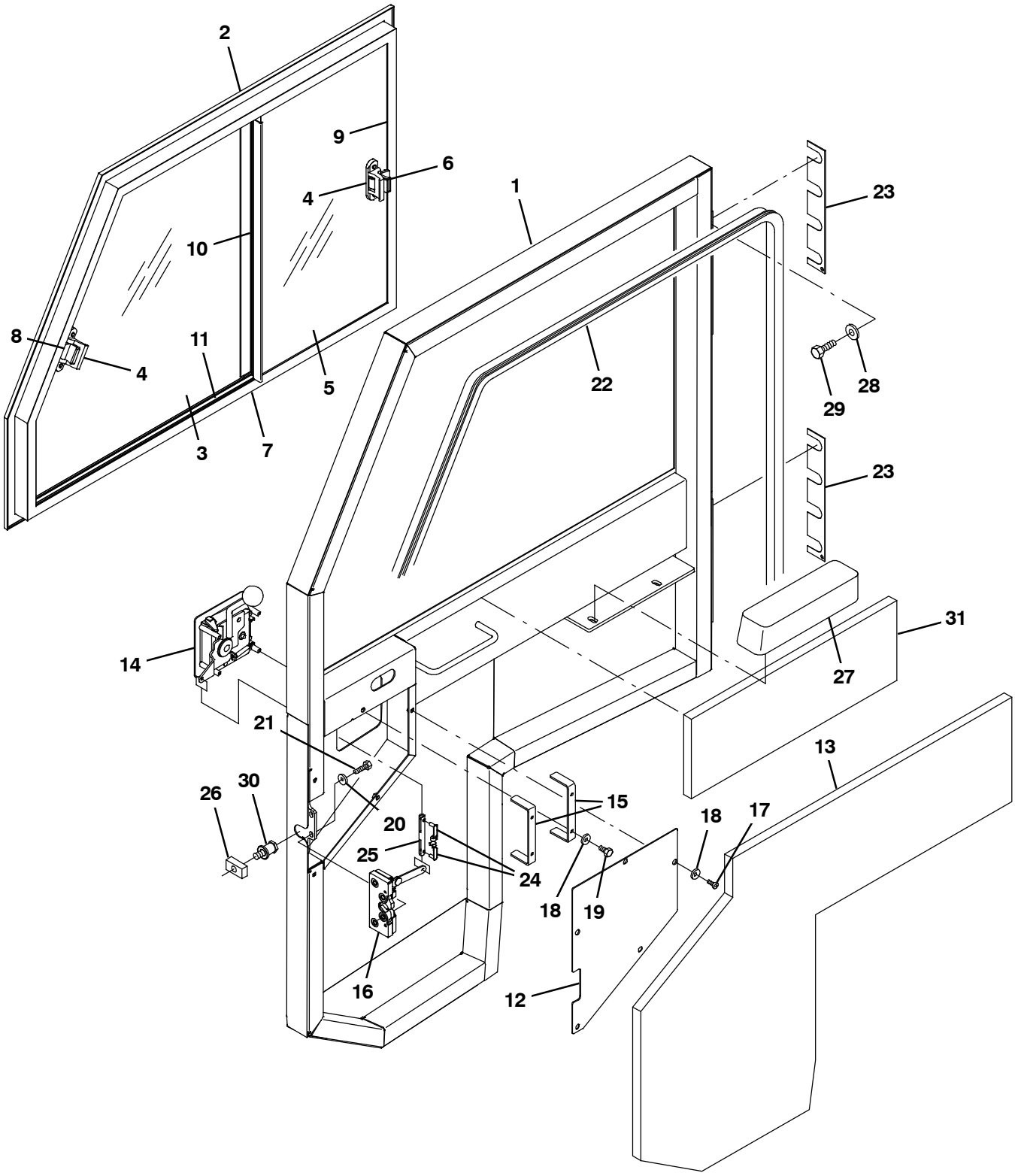

08784 - ALL

Fig. 29 - Cab Door Assembly (008089-)

NOTE: The Cab Assembly, TENNANT Part Number 9012887 includes Fig. 27, Fig. 29, Fig. 30, and .Fig. 31

	Ref.	Part No.	Serial Number	Description	Qty.
▽		9012899	(008089-)	Door Assy, Cab, Replmt [800gray]	1
▲	1	1073931	(008089-)	Door Wldt, Cab [800 Gray]	1
▲▽	2	1062708	(008089-)	Pane Assy, Door, Cab, Rh Side	1
▲▲	3	1064893	(008089-)	Pane, Glass, Door	1
▲▲	4	1068804	(008089-)	Latch Assy, Wndw [800 Cab]	2
▲▲	5	1064894	(008089-)	Pane, Glass, Door	1
▲▲	6	374294	(008089-)	Latch, Keeper, Pane [J- dak]	1
▲▲	7	21313	(008089-)	Frame, Pane, Door, Side	1
▲▲	8	374765	(008089-)	Keeper, Latch, Pane	1
▲▲	9	1069298	(008089-)	Seal Stop, Wndw	1
▲▲	10	1069309	(008089-)	Seal, Wndw [Center Wipe]	2
▲▲	11	1069305	(008089-)	Channel, Seal, Wndw	1
▲	12	1074539	(008089-)	Cover, Latch Assy, Door [800 Gray]	1
▲	13	1065909	(008089-)	Insulation, Acstc, Door, Side	1
▲	14	1058254	(008089-)	Latch Assy, Door	1
▲		21150	(008089-)	Key Set	1
▲	15	1061447	(008089-)	Bracket, Latch, Sppt	2
▲	16	1058256	(008089-)	Lock Assy, Door	1
▲	17	06933	(008089-)	Screw, Pan, Phl, M5 X 0.80 X 16, 4.8	5
▲	18	19066	(008089-)	Washer, Flat, 0.25b 0.56d .05, Pl, 10	9
▲	19	42011	(008089-)	Screw, Hex, 10- 24 X 0.50, Ss	4
▲	20	32483	(008089-)	Washer, Flat, 0.25, Sae	3
▲	21	25046	(008089-)	Screw, Hex, .25- 20 X 1.00, G5	3
▲	22	1030601	(008089-)	Seal, Afmkt, Bulb, 90, 0.75d F/11ga 20ft	1
▲	23	1062143	(008089-)	Plate, Shim	2
▲	24	1058258	(008089-)	Clip, Retainer	2
▲	25	1058257	(008089-)	Link, Connecting	1
	26	1061655	(008089-)	Plate, Thrd	1
	27	311336	(008089-)	Armrest, Black	1
	28	32492	(008089-)	Washer, Flat, 0.38, Std	8
	29	06961	(008089-)	Screw, Hex, M10 X 1.5	8
	30	58490	(008089-)	Pin, Latch	1
	31	1073737	(008089-)	Insulation, Acstc, 0.5, 05.5 X 18.9 Adh	1

Fig. 30 - Cab Insulation Group

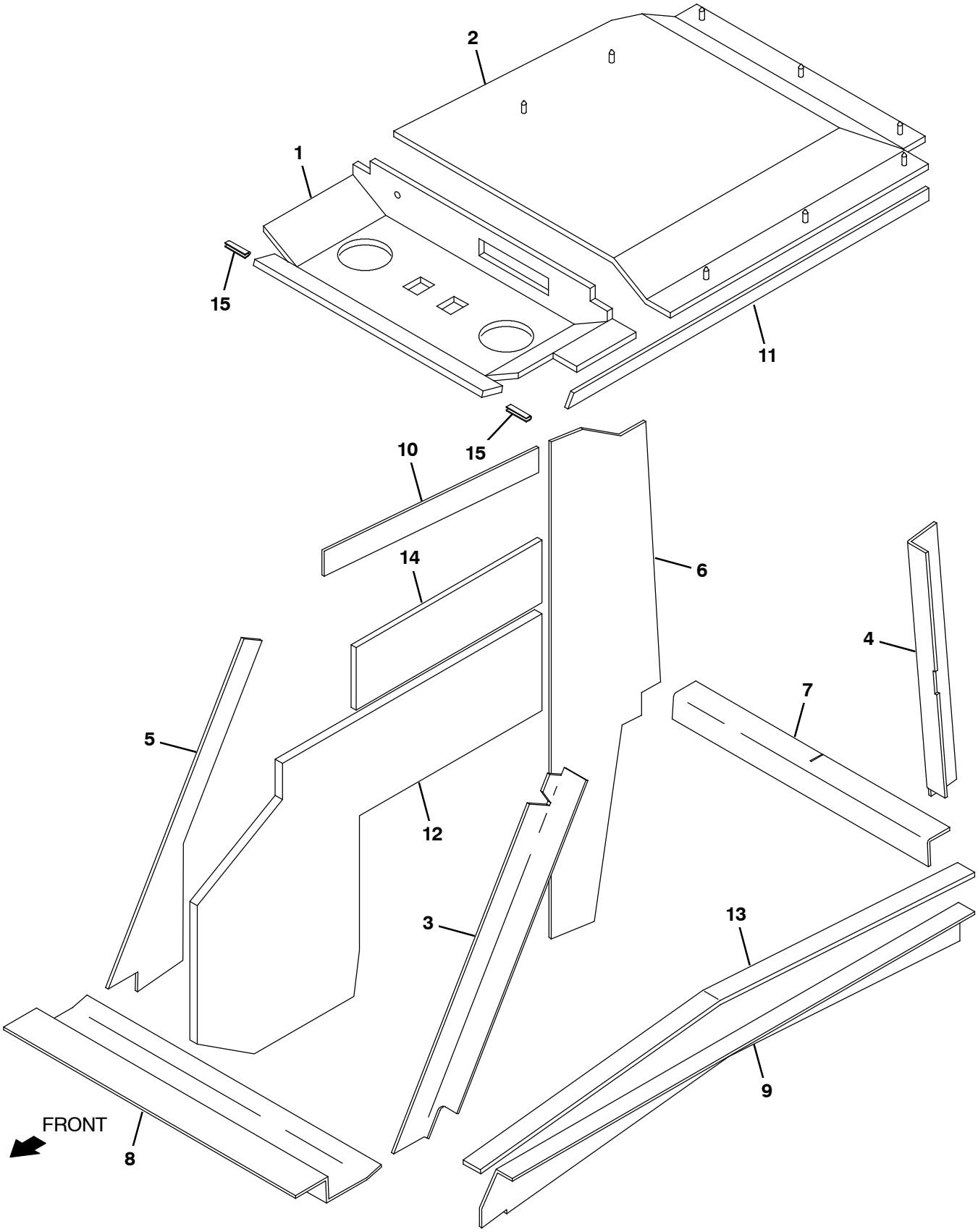

08953 - ALL

Fig. 30 - Cab Insulation Group

NOTE: The Cab Assembly, TENNANT Part Number 9007651 includes Fig. 27, Fig. 28, Fig. 30, and .Fig. 31

NOTE: The Cab Assembly, TENNANT Part Number 9012887 includes Fig. 27, Fig. 29, Fig. 30, and .Fig. 31

	Ref.	Part No.	Serial Number	Description	Qty.
▽		1074781	(000000-)	Insulation Kit, Cab [800]	1
▲	1	77800	(000000-)	Insulation, Acstc, Cab Front	1
▲	2	77801	(000000-)	Insulation, Acstc, Cab Rear	1
▲	3	77802	(000000-)	Insulation, Acstc, Cab, Leg, Front	1
▲	4	77803	(000000-)	Insulation, Acstc, Cab, Leg, Rear	1
▲	5	77804	(000000-)	Insulation, Acstc, Cab, Leg, Front	1
▲	6	77805	(000000-)	Insulation, Acstc, Cab, Leg, Rear	1
▲	7	77806	(000000-)	Insulation, Acstc, Cab, Proj, Rear	1
▲	8	77807	(000000-)	Insulation, Acstc, Cab, Proj, Front	1
▲	9	77808	(000000-)	Insulation, Acstc, Cab, Proj, Side	1
▲	10	77809	(000000-)	Insulation, Acstc, Cab, Proj, Upper	1
▲	11	1070055	(000000-)	Insulation, Acstc, Cab, Proj, Ls	1
▲	12	1065909	(000000-)	Insulation, Acstc, 0.8, 20.9 X 35.0 Ntch	1
▲	13	1073666	(000000-)	Insulation, Acstc, 0.5, 47.3 X 01.8 Adh	1
▲	14	1073737	(000000-)	Insulation, Acstc, 0.5, 05.5 X 18.9 Adh	1
	15	384156	(000000-)	Molding, Trim, Pvc, .18- .31 01.5l	2

Fig. 31 - Cab Wire Harness Group

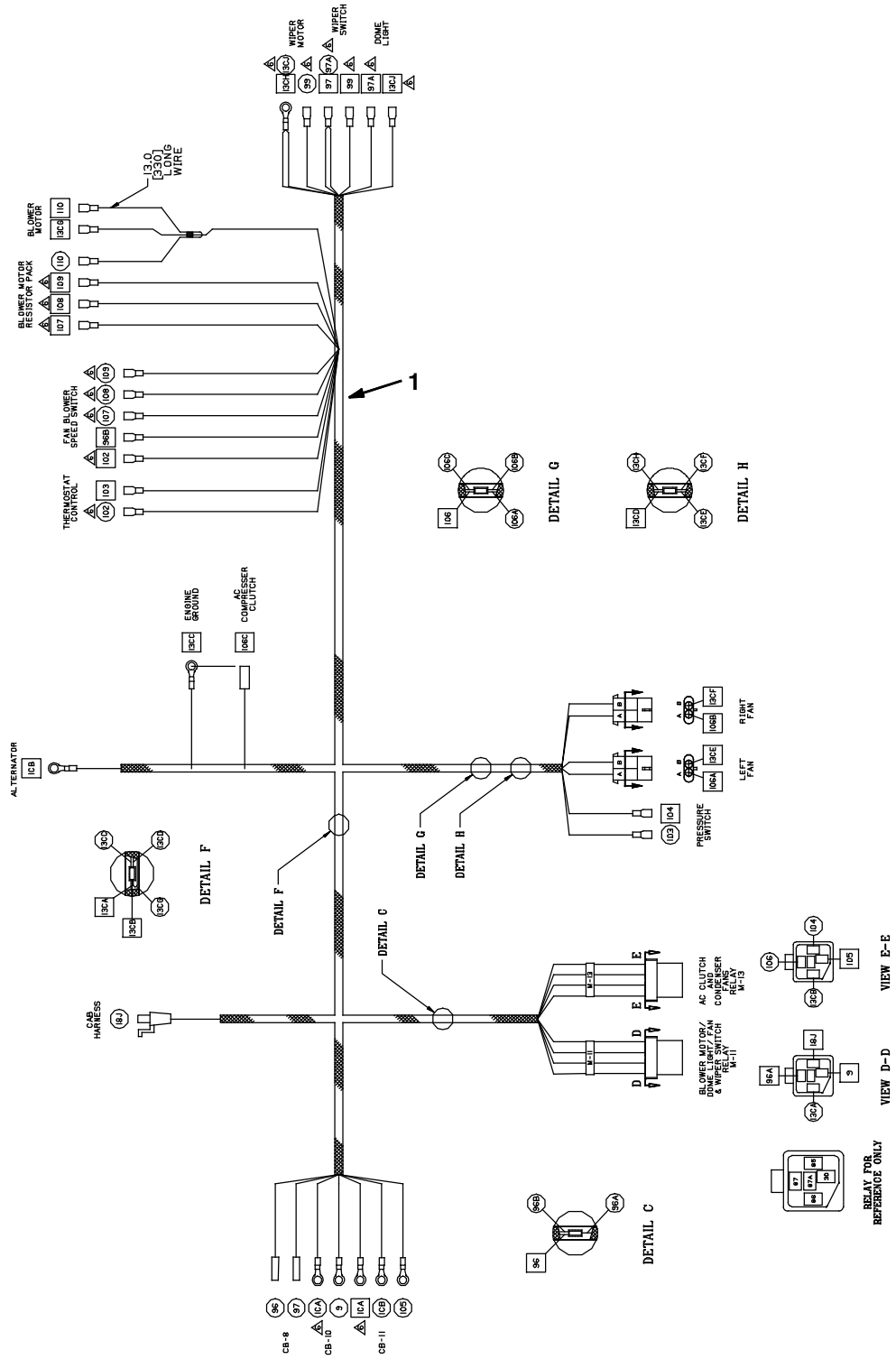

NOTE: The Cab Assembly, TENNANT Part Number 9007651 includes Fig. 27, Fig. 28, Fig. 30, and .Fig. 31

NOTE: The Cab Assembly, TENNANT Part Number 9012887 includes Fig. 27, Fig. 29, Fig. 30, and .Fig. 31

351143 - ALL

Ref.	Part No.	Serial Number	Description	Qty.
1	380577	(000000-)	Harness, Cab, 800/810	1

Fig. 32 - AC Condenser Box Breakdown, 380625 (000000-008088)

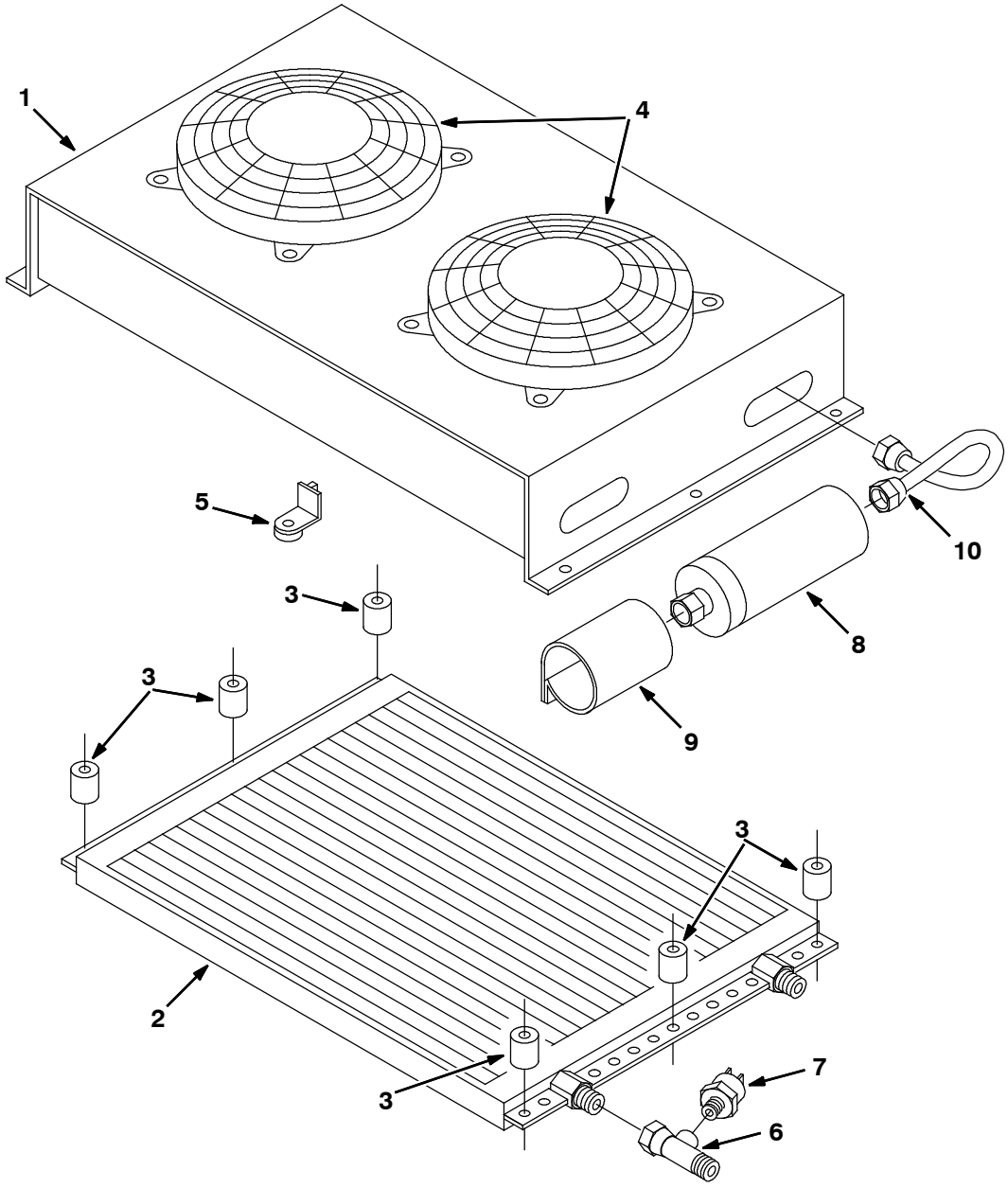

350830 - ALL

	Ref.	Part No.	Serial Number	Description	Qty.
▽		380625	(000000-008088)	Condenser Assy, A/C	1
▲	1	380666	(000000-008088)	Housing, Condenser	1
▲	2	380667	(000000-008088)	Coil, Condenser	1
▲	3	380668	(000000-008088)	Spacer, Condenser	6
▲	4	380669	(000000-008088)	Fan, Condenser	2
▲	5	380670	(000000-008088)	Foot, Fan	8
▲	6	380671	(000000-008088)	Ftg, Shrader	1
▲	7	393349	(000000-008088)	Switch, A/C [Binary]	1
▲	8	380627	(000000-008088)	Dryer, Ac	1
▲	9	380628	(000000-008088)	Bracket,A/C Dryer	1
▲	10	380626	(000000-008088)	Tube Asy,Cond/Dry	1

Fig. 33 - AC Condenser Box Breakdown, 9012898 (008089-)

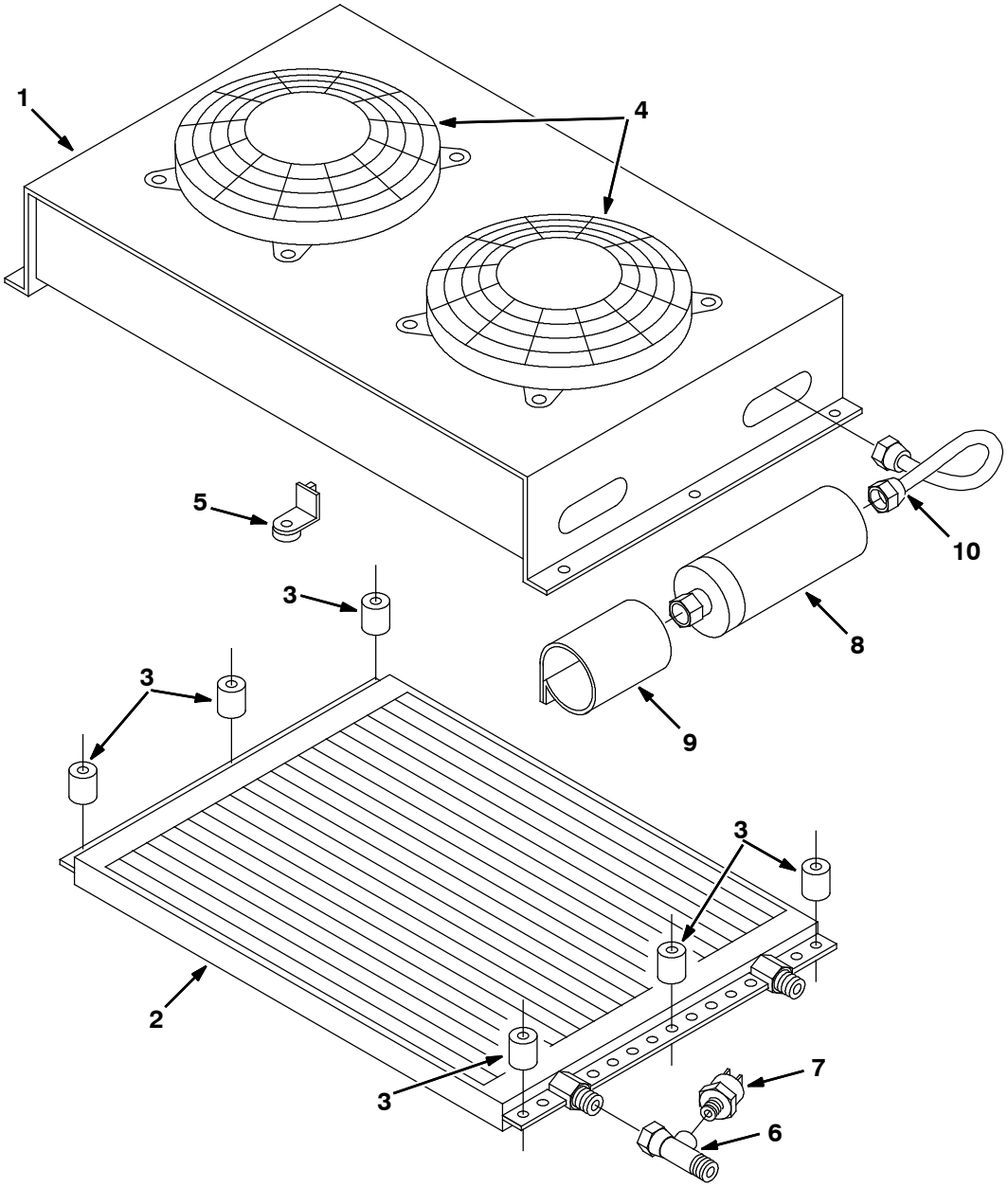

350830 - ALL

Fig. 33 - AC Condenser Box Breakdown, 9012898 (008089-)

	Ref.	Part No.	Serial Number	Description	Qty.
▽		9012898	(008089-)	Condenser, A/C, Roof [R134 Bd, Gray]	1
▲	1	1073906	(008089-)	Condenser, A/C [Badger Gray]	1
▲	2	380667	(008089-)	Coil, Condenser	1
▲	3	380668	(008089-)	Spacer, Condenser	6
▲	4	380669	(008089-)	Fan, Condenser	2
▲	5	380670	(008089-)	Foot, Fan	8
▲	6	380671	(008089-)	Ftg, Shrader	1
▲	7	393349	(008089-)	Switch, A/C [Binary]	1
▲	8	380627	(008089-)	Dryer, Ac	1
▲	9	380628	(008089-)	Bracket,A/C Dryer	1
▲	10	380626	(008089-)	Tube Asy,Cond/Dry	1

Fig. 34 - AC and Heater Box Breakdown, 380613 (000000-008088)

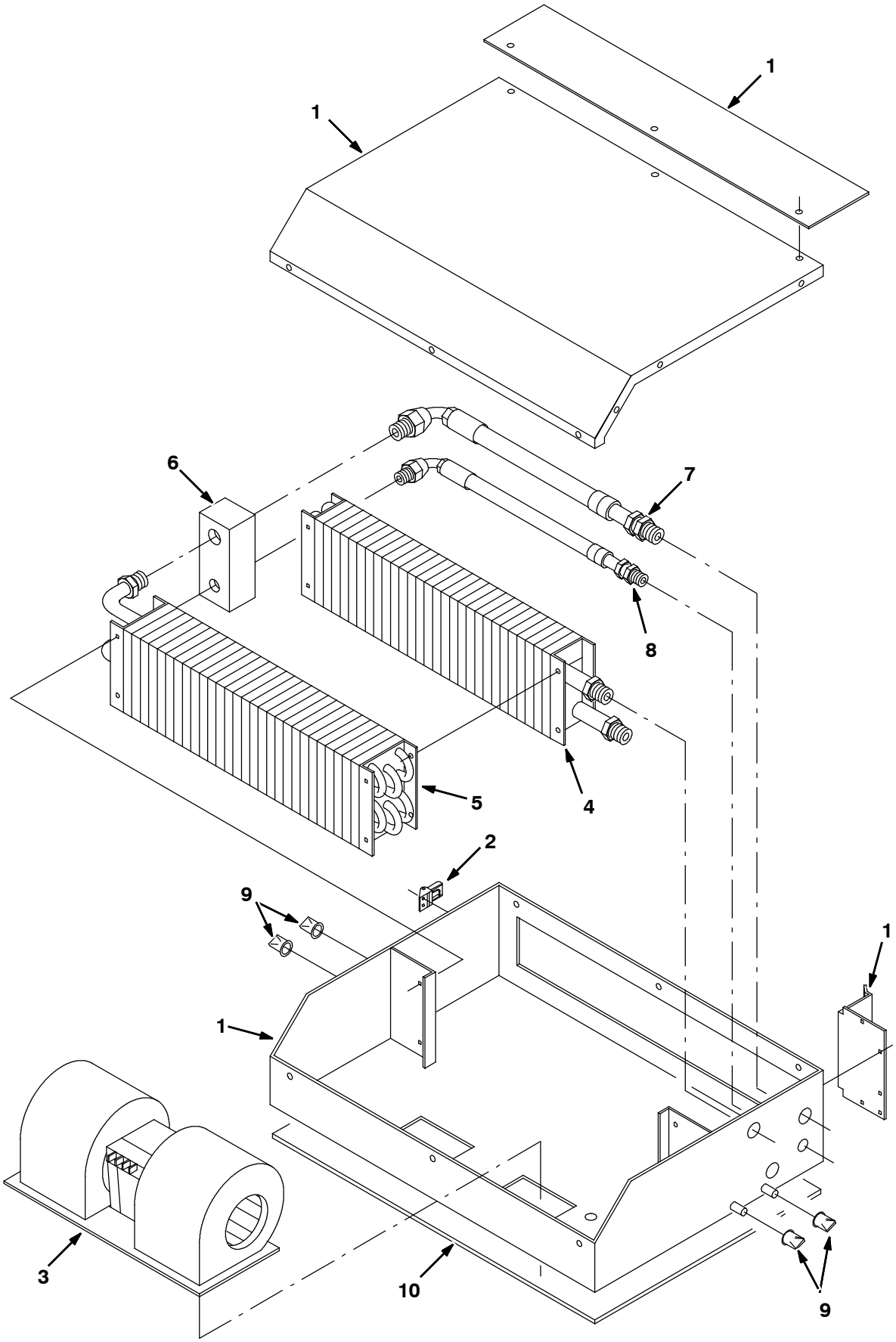

350826 - ALL

Fig. 34 - AC and Heater Box Breakdown, 380613 (000000- 008088)

	Ref.	Part No.	Serial Number	Description	Qty.
▽		380613	(000000- 008088)	Box Assy, Heat/Ac	1
▲	1	388407	(000000- 008088)	Housing Assembly	1
▲	2	87579	(000000- 008088)	Latch, Tension	1
▲	3	380649	(000000- 008088)	Blower, Heat/Ac	1
▲	4	380650	(000000- 008088)	Heater Coil	1
▲	5	380651	(000000- 008088)	Coil, Evaporator	1
▲	6	380652	(000000- 008088)	Valve, Expansion	1
▲	7	380578	(000000- 008088)	A/C Hose#10 134A	1
▲	8	380579	(000000- 008088)	A/C Hose #6 134A	1
▲	9	380659	(000000- 008088)	Duck Bill	4
▲	10	380616	(000000- 008088)	Gasket, Box/Cab	1

Fig. 35 - AC and Heater Box Breakdown, 1073904 (008089-)

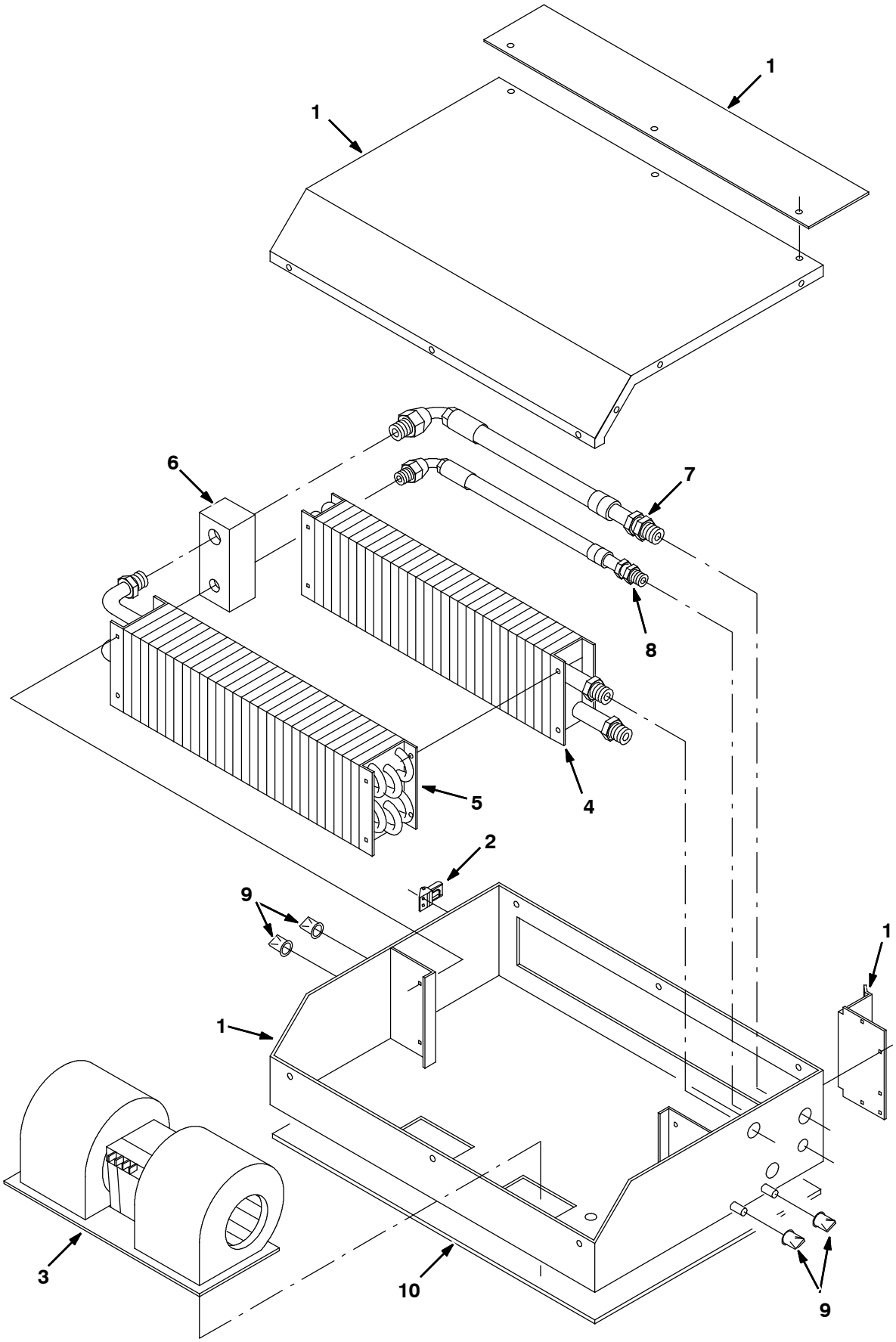

350826 - ALL

Fig. 35 - AC and Heater Box Breakdown, 1073904 (008089-)

	Ref.	Part No.	Serial Number	Description	Qty.
▽		1073904	(008089-)	Heater, W/ A/C [Badger, Gray]	1
▲	1	1073907	(008089-)	Housing, Heater [Badger, Gray]	1
▲	2	87579	(008089-)	Latch, Tension	1
▲	3	380649	(008089-)	Blower, Heat/Ac	1
▲	4	380650	(008089-)	Heater Coil	1
▲	5	380651	(008089-)	Coil, Evaporator	1
▲	6	380652	(008089-)	Valve, Expansion	1
▲	7	380578	(008089-)	A/C Hose#10 134A	1
▲	8	380579	(008089-)	A/C Hose #6 134A	1
▲	9	380659	(008089-)	Duck Bill	4
▲	10	380616	(008089-)	Gasket, Box/Cab	1

Fig. 36 - Heater Box Breakdown, 380614 (000000-008088)

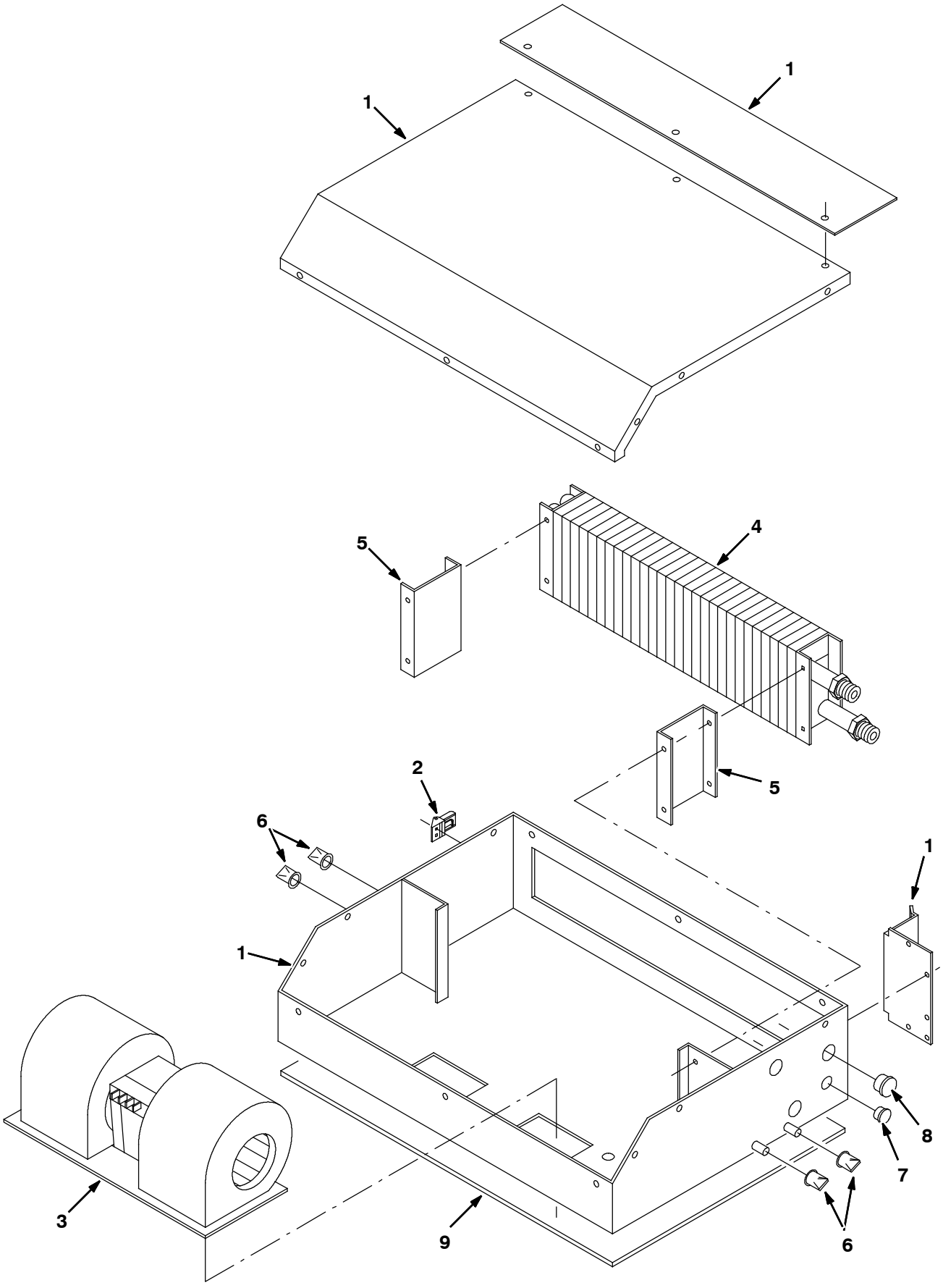

350828 - ALL

Fig. 36 - Heater Box Breakdown, 380614 (000000- 008088)

	Ref.	Part No.	Serial Number	Description	Qty.
▽		380614	(000000- 008088)	Box Assy, Heat	1
▲	1	388407	(000000- 008088)	Housing Assembly	1
▲	2	87579	(000000- 008088)	Latch, Tension	1
▲	3	380649	(000000- 008088)	Blower, Heat/Ac	1
▲	4	380650	(000000- 008088)	Heater Coil	1
▲	5	380660	(000000- 008088)	Brkt,Mtg,Htr Coil	2
▲	6	380659	(000000- 008088)	Duck Bill	4
▲	7	57167	(000000- 008088)	Plugbtn .62H .03- .12 Blacknyl	1
▲	8	82727	(000000- 008088)	Plugbtn .88H .03- .12 Blacknyl	1
▲	9	380616	(000000- 008088)	Gasket, Box/Cab	1

Fig. 37 - Heater Box Breakdown, 1073905 (008089-)

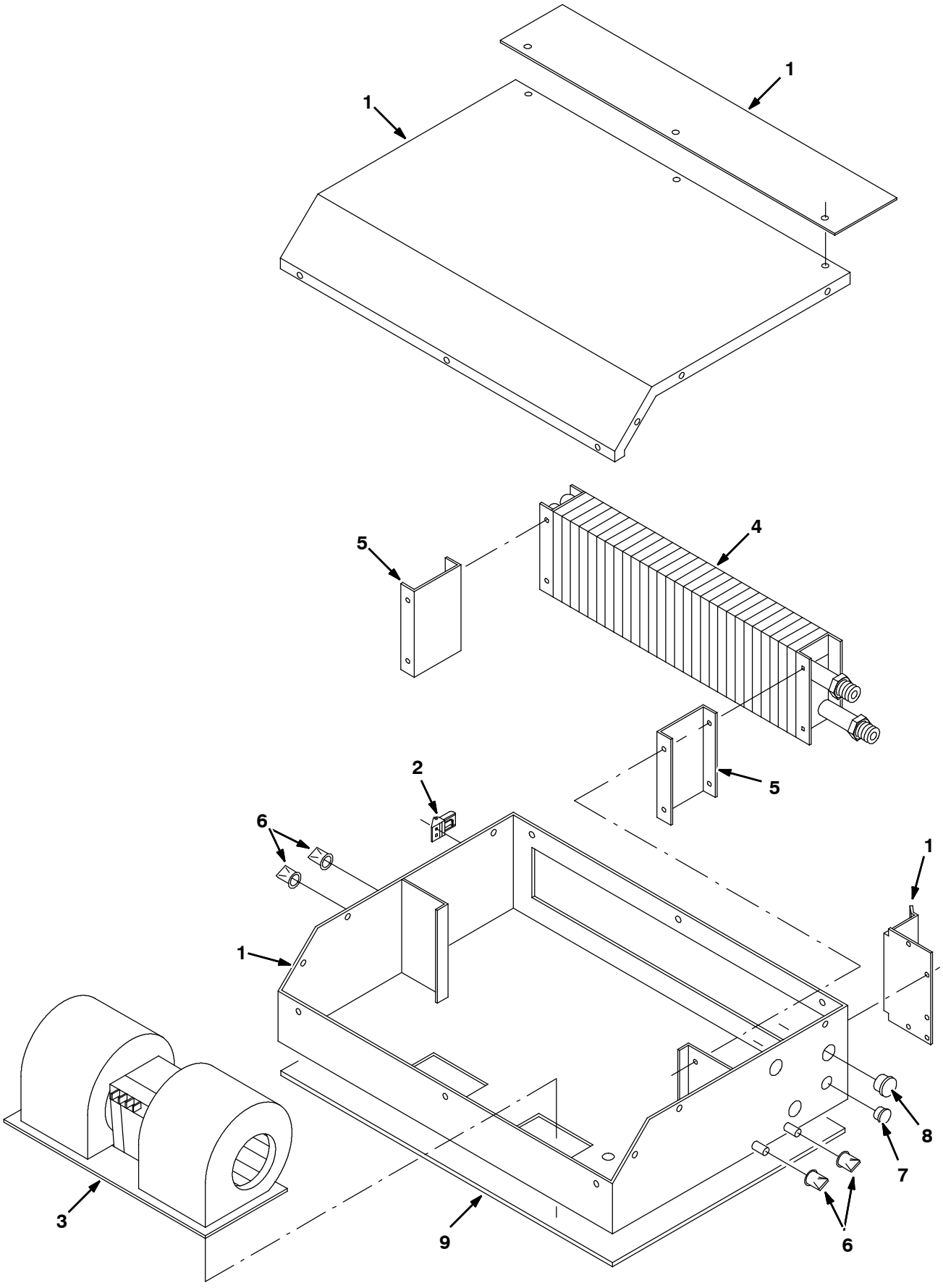

350828 - ALL

Fig. 37 - Heater Box Breakdown, 1073905 (008089-)

	Ref.	Part No.	Serial Number	Description	Qty.
▽		1073905	(008089-)	Heater [Badger, Gray]	1
▲	1	1073907	(008089-)	Housing, Heater [Badger, Gray]	1
▲	2	87579	(008089-)	Latch, Tension	1
▲	3	380649	(008089-)	Blower, Heat/Ac	1
▲	4	380650	(008089-)	Heater Coil	1
▲	5	380660	(008089-)	Brkt,Mtg,Htr Coil	2
▲	6	380659	(008089-)	Duck Bill	4
▲	7	57167	(008089-)	Plugbtn .62H .03- .12 Blacknyl	1
▲	8	82727	(008089-)	Plugbtn .88H .03- .12 Blacknyl	1
▲	9	380616	(008089-)	Gasket, Box/Cab	1

Fig. 38 - Brake Assy, Right Hand (R.h.) 77790

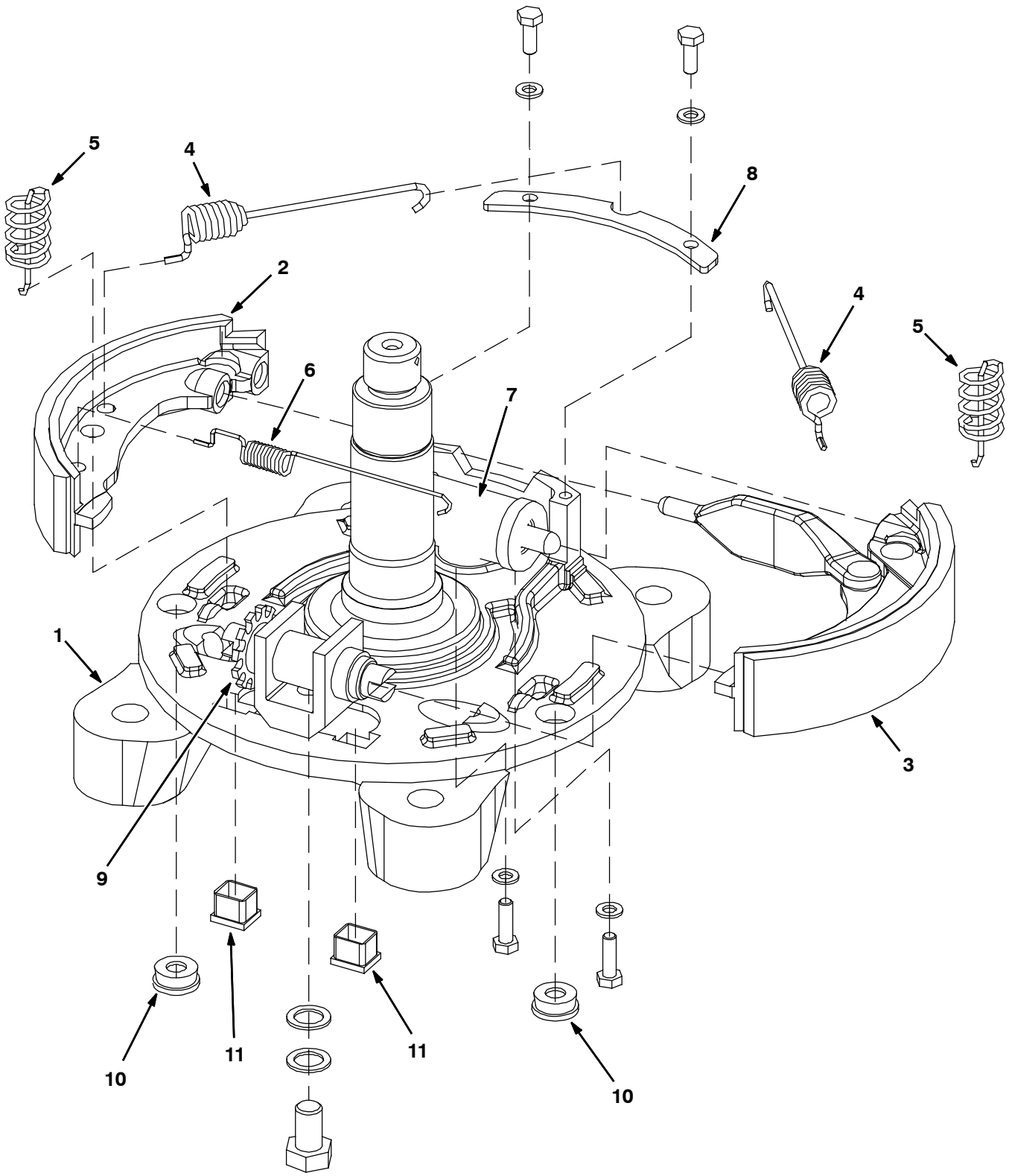

353623 - ALL

Fig. 38 - Brake Assy, Right Hand (R.h.) 77790

	Ref.	Part No.	Serial Number	Description	Qty.
▽		77790	(000000-)	Brake Assy, Drum, Hyd, 08.8d 1.6w Rh	1
▲	1	77768	(000000-)	Backing Plate Rh	1
▲	2	70613	(000000-)	Shoe, Brake	1
▲	3	70612	(000000-)	Shoe, Brake	1
▲	4	21728	(000000-)	Spring	2
▲	5	70617	(000000-)	Spring	2
▲	6	70618	(000000-)	Spring	1
▲	7	70609	(000000-)	Cylinder, Wheel, Brake	1
▲	8	70603	(000000-)	Clamp, Hold Down	1
▲	9	70615	(000000-)	Adjuster, Manual	1
▲	10	372950	(000000-)	Plug, Rbr, Rnd	2
▲	11	372951	(000000-)	Plug, Plstc, Sq	2

Fig. 39 - Brake Assy, Left Hand (L.h.) 77770

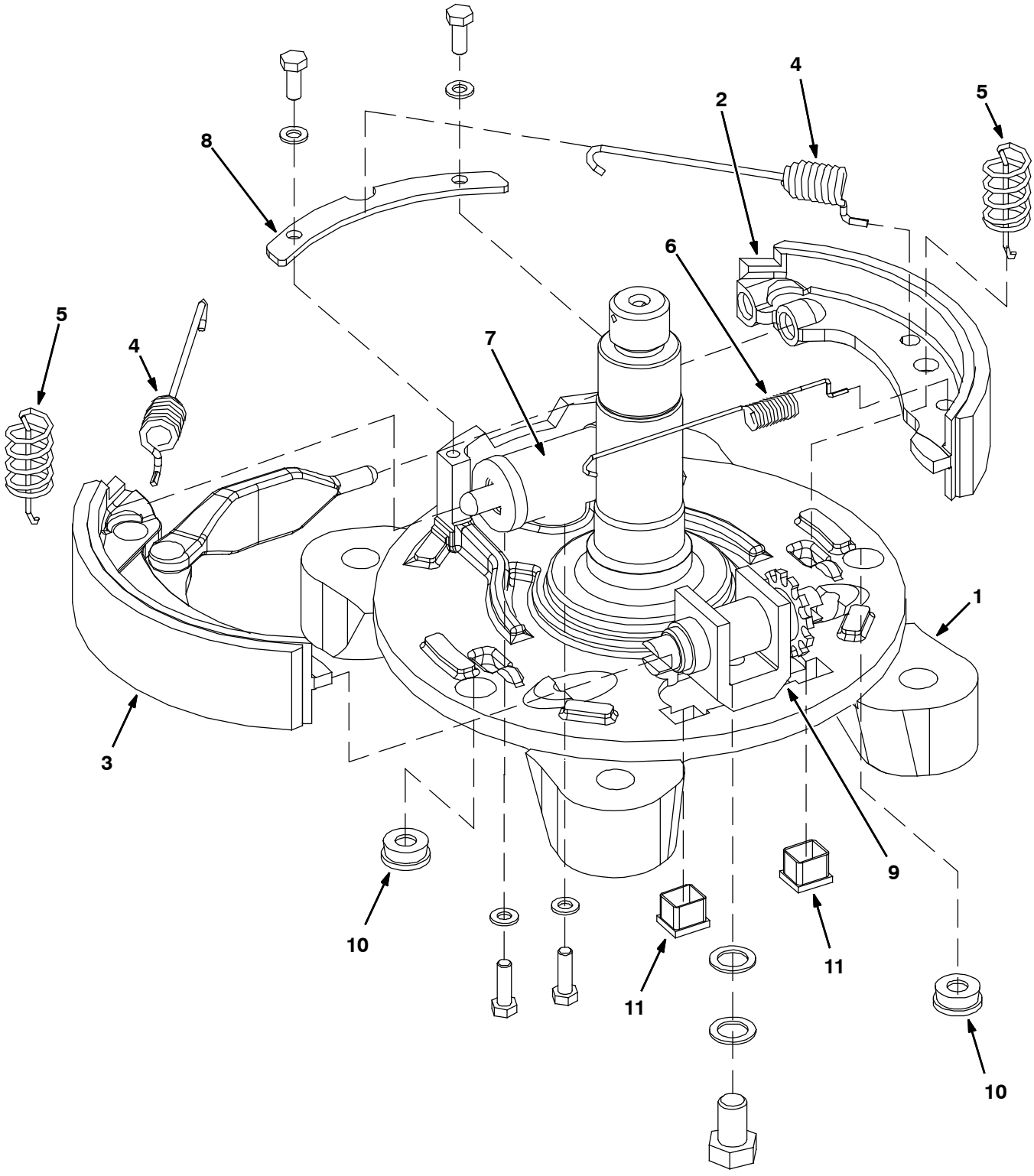

353624 - ALL

Fig. 39 - Brake Assy, Left Hand (L.h.) 77770

	Ref.	Part No.	Serial Number		Description	Qty.
▽		77770	(000000-	)	Brake Assy, Drum, Hyd, 08.0d 1.6w Lh	1
▲	1	77769	(000000-	)	Plate, Backing	1
▲	2	70613	(000000-	)	Shoe, Brake	1
▲	3	70611	(000000-	)	Shoe, Brake	1
▲	4	21728	(000000-	)	Spring	2
▲	5	70617	(000000-	)	Spring	2
▲	6	70618	(000000-	)	Spring	1
▲	7	70609	(000000-	)	Cylinder, Wheel, Brake	1
▲	8	70603	(000000-	)	Clamp, Hold Down	1
▲	9	70615	(000000-	)	Adjuster, Manual	1
▲	10	372950	(000000-	)	Plug, Rbr, Rnd	2
▲	11	372951	(000000-	)	Plug, Plstc, Sq	2

Fig. 40 - LPG EFI Breakdown, 371894

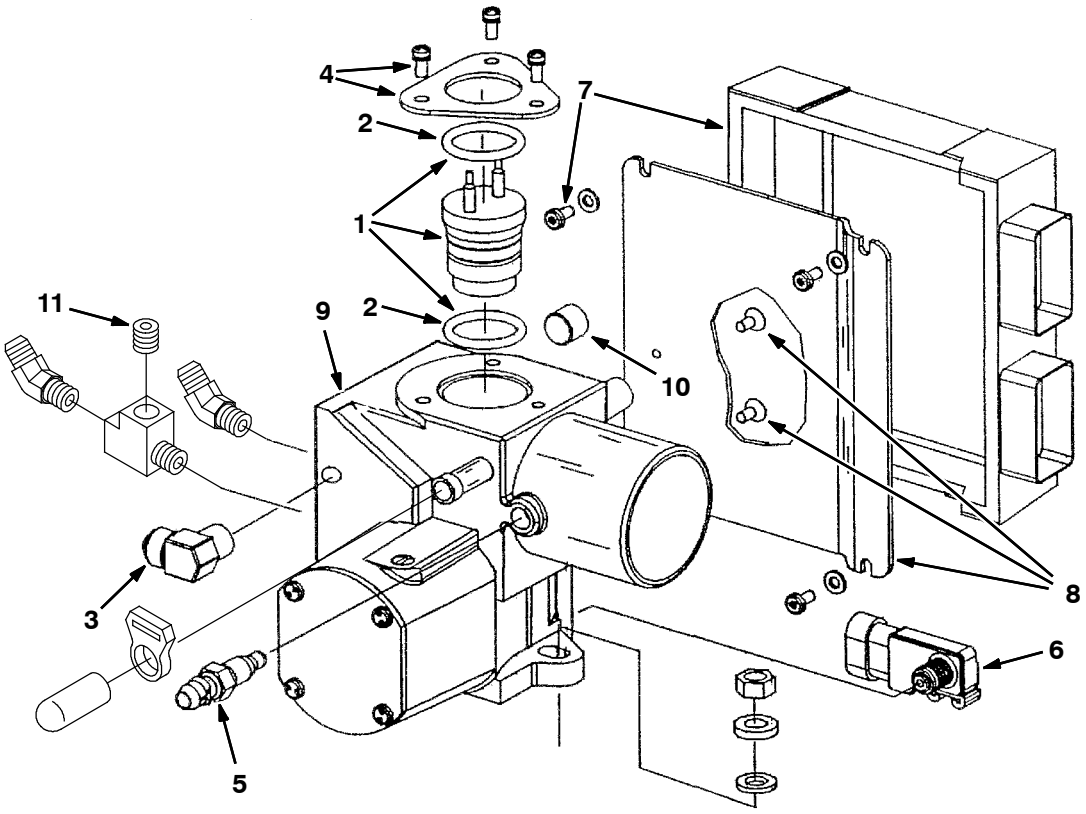

353893 - 800, LP

Fig. 40 - LPG EFI Breakdown, 371894

	Ref.	Part No.	Serial Number	Description	Qty.
▽		371894	(000000-)	Housing Assy, Throttle, Lpg, [With Ecu]	1
▲▽	1	1017270	(000000-)	Injector, Fuel, Lpg [3.0l Gm] 8410	1
▲▲	2	371665	(000000-)	Kit, Org, Injector, Top And Bottom, Lpg	1
▲	3	371666	(000000-)	Fitting, Fuel Inlet, Lpg	1
▲	4	371651	(000000-)	Plate, Injector Mtg, W/ Screw	1
▲	5	371653	(000000-)	Sensor, Temp	1
▲		371714	(000000-)	Kit, Connector, Coolant Sensor	1
▲		371715	(000000-)	Kit, Connector, Sensor, [Iat]	1
▲	6	371654	(000000-)	Sensor, Manifold Press	1
▲		371713	(000000-)	Kit, Connector, Sensor, [Map]	1
▲	7	9000823	(000000-)	Kit, Replmt, Controller	1
▲	8	391891	(000000-)	Plate, Mtg, W/ Screw, [Ecu], Lpg	1
▲	9	371669	(000000-)	Housing, Throttle, Lpg	1
▲		371718	(000000-)	Kit, Connector, Govnr	1
▲	10	371660	(000000-)	Fitting, Coolant Plug	1
▲	11	10552	(000000-)	Fitting, Pipe, Plug, Pm02 Soc Head	1

Fig. 41 - LPG EFI Breakdown, 371895

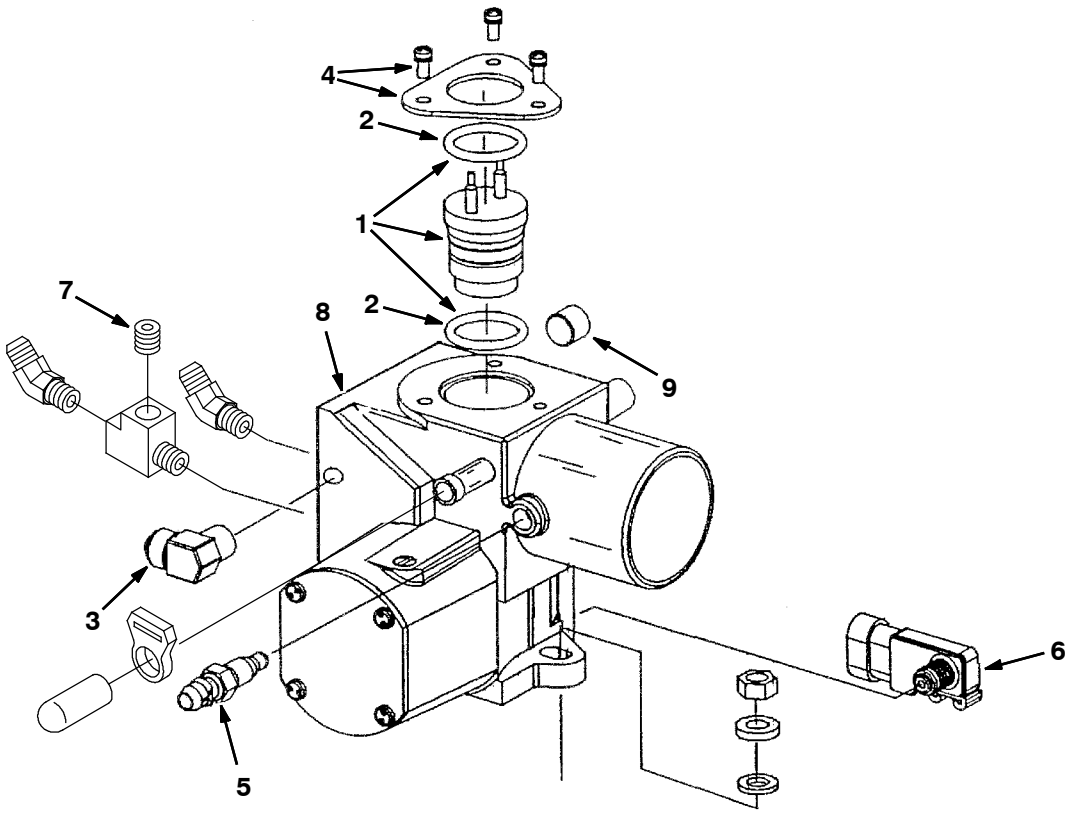

353893 - 800, LP

Fig. 41 - LPG EFI Breakdown, 371895

	Ref.	Part No.	Serial Number		Description	Qty.
▽		371895	(000000-	)	Housing Assy, Throttle, Lpg, [Without Ecu]	1
▲▽	1	1017270	(000000-	)	Injector, Fuel, Lpg [3.0l Gm] 8410	1
▲▲	2	371665	(000000-	)	Kit, Org, Injector, Top And Bottom, Lpg	1
▲	3	371666	(000000-	)	Fitting, Fuel Inlet, Lpg	1
▲	4	371651	(000000-	)	Plate, Injector Mtg, W/ Screw	1
▲	5	371653	(000000-	)	Sensor, Temp	1
▲		371714	(000000-	)	Kit, Connector, Coolant Sensor	1
▲		371715	(000000-	)	Kit, Connector, Sensor, [Iat]	1
▲	6	371654	(000000-	)	Sensor, Manifold Press	1
▲		371713	(000000-	)	Kit, Connector, Sensor, [Map]	1
▲	7	10552	(000000-	)	Fitting, Pipe, Plug, Pm02 Soc Head	1
▲	8	371669	(000000-	)	Housing, Throttle, Lpg	1
▲		371718	(000000-	)	Kit, Connector, Govnr	1
▲	9	371660	(000000-	)	Fitting, Coolant Plug	1

Fig. 42 - Gasoline EFI Breakdown, 371896

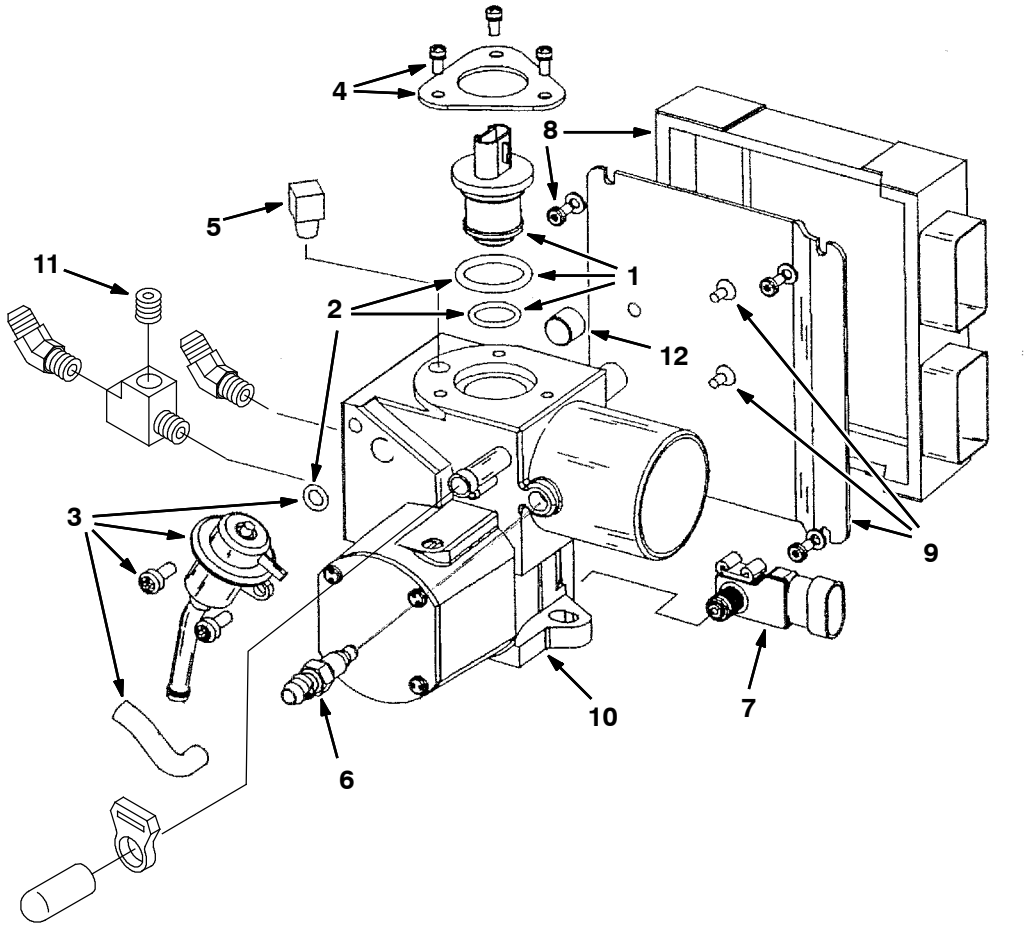

800, G

Fig. 42 - Gasoline EFI Breakdown, 371896

	Ref.	Part No.	Serial Number		Description	Qty.
▽		371896	(000000-	)	Housing Assy, Throttle, Gas, [With Ecu]	1
▲▽	1	371899	(000000-	)	Injector, Gas, W/ Top And Bottom Org	1
▲▲	2	371649	(000000-	)	Kit, Org, Injector And Reg, Gas	1
▲		371716	(000000-	)	Kit, Connector, Gas Injector	1
▲	3	371908	(000000-	)	Kit, Reg, Gas Press	1
▲	4	371651	(000000-	)	Plate, Injector Mtg, W/ Screw	1
▲	5	15555-2	(000000-	)	Fitting, Brs, E90, If05/Pm04	1
▲		371714	(000000-	)	Kit, Connector, Coolant Sensor	1
▲		371715	(000000-	)	Kit, Connector, Sensor, [Iat]	1
▲	6	371653	(000000-	)	Sensor, Temp	1
▲	7	371654	(000000-	)	Sensor, Manifold Press	1
▲	8	371901	(000000-	)	Control, Electonic, Gas	1
▲	9	391890	(000000-	)	Plate, Mtg, W/ Screw, [Ecu], Gas	1
▲	10	371902	(000000-	)	Housing, Throttle, Gas	1
▲		371718	(000000-	)	Kit, Connector, Govnr	1
▲	11	10552	(000000-	)	Fitting, Pipe, Plug, Pm02 Soc Head	1
▲	12	371660	(000000-	)	Fitting, Coolant Plug	1

Fig. 43 - Gasoline Electronic Fuel Ignition Breakdown, 371897

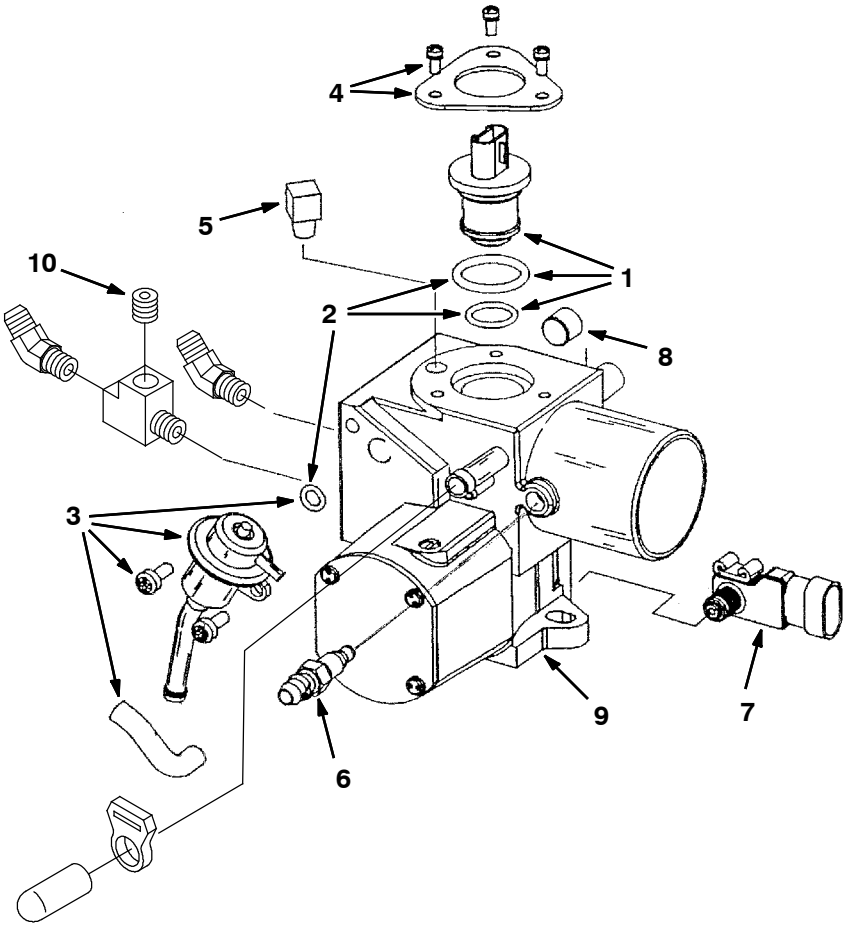

800, 810, G

Fig. 43 - Gasoline Electronic Fuel Ignition Breakdown, 371897

	Ref.	Part No.	Serial Number		Description	Qty.
▽		371897	(000000-	)	Housing Assy, Throttle, Gas, [Without Ecu]	1
▲▽	1	371899	(000000-	)	Injector, Gas, W/ Top And Bottom Org	1
▲▲	2	371649	(000000-	)	Kit, Org, Injector And Reg, Gas	1
▲		371716	(000000-	)	Kit, Connector, Gas Injector	1
▲	3	371908	(000000-	)	Kit, Reg, Gas Press	1
▲	4	371651	(000000-	)	Plate, Injector Mtg, W/ Screw	1
▲	5	15555- 2	(000000-	)	Fitting, Brs, E90, If05/Pm04	1
▲		371714	(000000-	)	Kit, Connector, Coolant Sensor	1
▲		371715	(000000-	)	Kit, Connector, Sensor, [Iat]	1
▲	6	371653	(000000-	)	Sensor, Temp	1
▲	7	371654	(000000-	)	Sensor, Manifold Press	1
▲	8	371660	(000000-	)	Fitting, Coolant Plug	1
▲	9	371902	(000000-	)	Housing, Throttle, Gas	1
▲		371718	(000000-	)	Kit, Connector, Govnr	1
▲	10	10552	(000000-	)	Fitting, Pipe, Plug, Pm02 Soc Head	1

Fig. 44 - Hydraulic Solenoid Valve Breakdown, 1049210

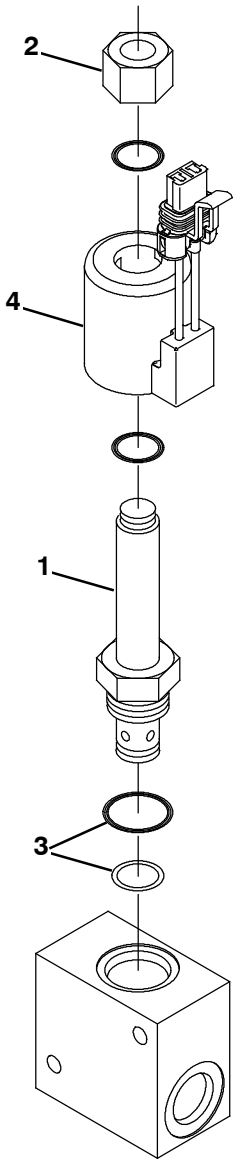

354903 - ALL

Fig. 44 - Hydraulic Solenoid Valve Breakdown, 1049210

	Ref.	Part No.	Serial Number		Description	Qty.
▽		1049210	(000000-	)	Valve, Cntrl, Hyd, Solenoid, 12vdc 12gpm	1
▲	1	1050812	(000000-	)	Stem, Valve, Hyd	1
▲	2	1050811	(000000-	)	Nut, Valve, Cartridge	1
▲	3	1050780	(000000-	)	Seal Kit, Cartridge	1
▲	4	1050809	(000000-	)	Solenoid, Valve, Hyd, 36vdc	1

Fig. 45 - Hydraulic Solenoid Valve Breakdown, 1049209

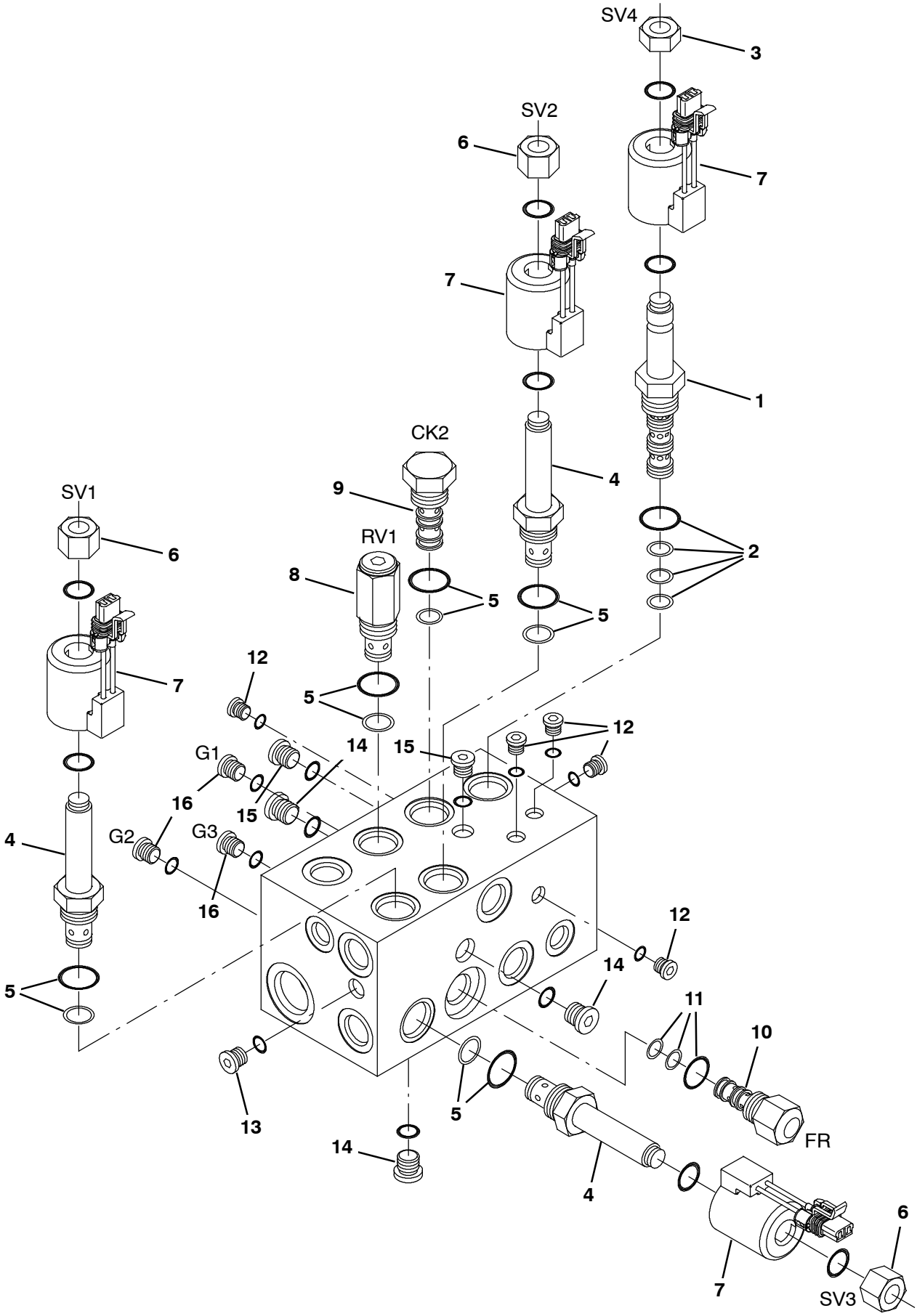

354896 - 800

Fig. 45 - Hydraulic Solenoid Valve Breakdown, 1049209

	Ref.	Part No.	Serial Number	Description	Qty.
▽		1049209	(000000-)	Valve, Cntrl, Hyd, Solenoid, 12vdc 08gpm	1
▲	1	1050861	(000000-)	Solenoid, Valve, Hyd	1
▲	2	1050870	(000000-)	Seal Kit, Cartridge	1
▲	3	373584	(000000-)	Nut, Valve, Cartridge	1
▲	4	1050812	(000000-)	Stem, Valve, Hyd	3
▲	5	1050780	(000000-)	Seal Kit, Cartridge	1
▲	6	373585	(000000-)	Nut, Valve, Cartridge	3
▲	7	1050809	(000000-)	Solenoid, Valve, Hyd, 36vdc	4
▲	8	1050862	(000000-)	Valve, Cartridge, Relief	1
▲	9	1050863	(000000-)	Valve, Cartridge, Check	1
▲	10	1050864	(000000-)	Valve, Cartridge, Flow Reg	1
▲	11	1050871	(000000-)	Seal Kit, Cartridge	1
▲	12	1050865	(000000-)	Fitting, Plug, Om02, Valve	5
▲	13	1050866	(000000-)	Fitting, Plug, Om04, Valve	1
▲	14	1050867	(000000-)	Fitting, Plug, Om06, Valve	3
▲	15	1050868	(000000-)	Fitting, Plug, Om05, Valve	2
▲	16	1050869	(000000-)	Fitting, Plug, Om04, Valve	3

Fig. 46 - Hydraulic Solenoid Valve Breakdown, 1049211

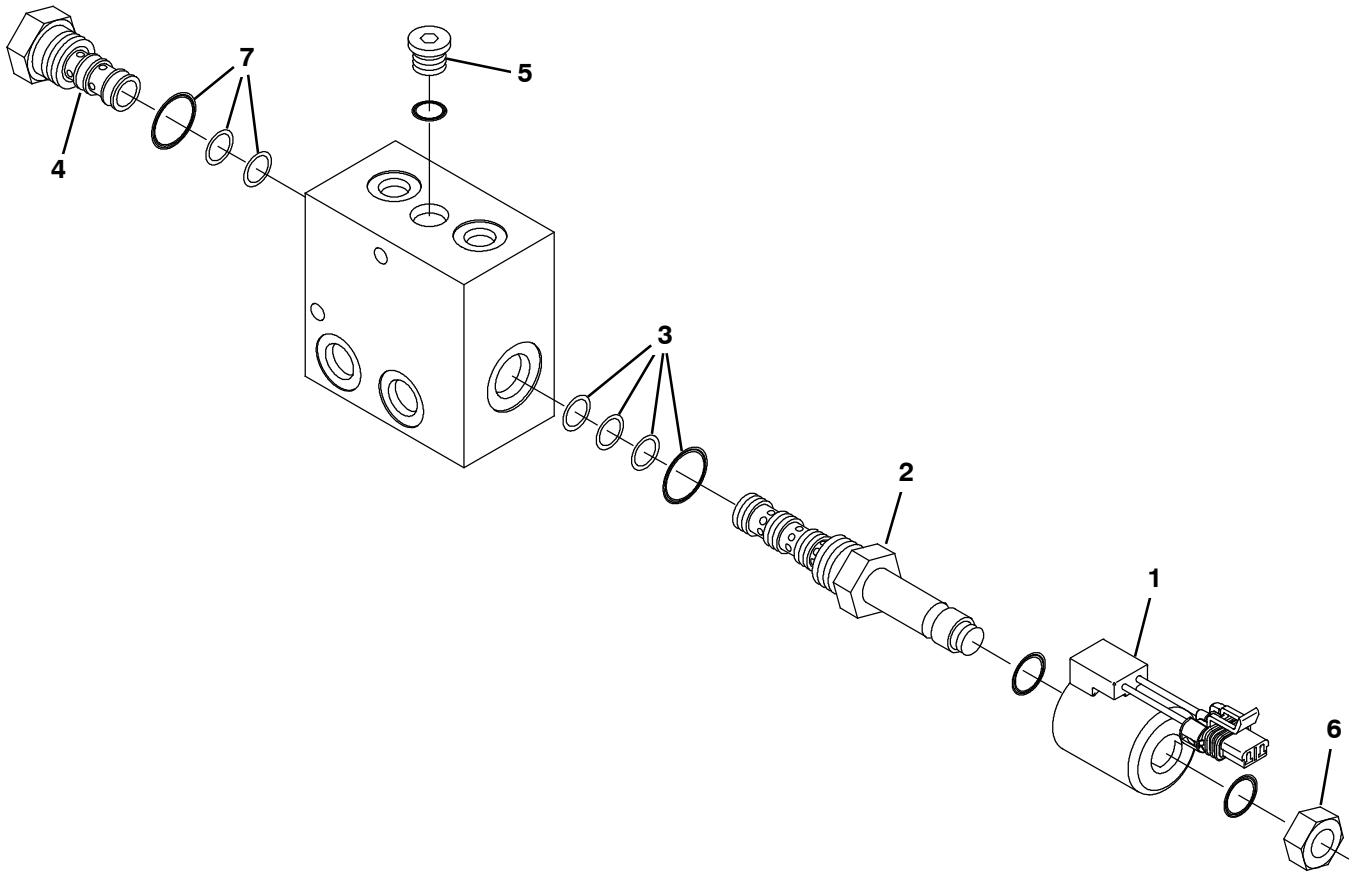

354900 - ALL

	Ref.	Part No.	Serial Number	Description	Qty.
▽		1049211	(000000-)	Valve, Cntrl, Hyd, Solenoid, 12vdc 06gpm	1
▲	1	1050809	(000000-)	Solenoid, Valve, Hyd, 36vdc	1
▲	2	1050861	(000000-)	Solenoid, Valve, Hyd	1
▲	3	1050870	(000000-)	Seal Kit, Cartridge	1
▲	4	1050872	(000000-)	Valve, Cartridge, Check	1
▲	5	1050873	(000000-)	Fitting, Plug, Om06, Valve	1
▲	6	1051078	(000000-)	Nut, Valve, Cartridge	1
▲	7	1051079	(000000-)	Seal Kit, Cartridge	1

SECTION 5

Contents **Page**

Fig. 1 - Engine Block Group 5-2
Fig. 2 - Gaskets Group 5-4
Fig. 3 - Cylinder Head Group 5-6
Fig. 4 - Cylinder Front Cover Group 5-7
Fig. 5 - Starter Breakdown 5-8
Fig. 6 - Oil Pan Group 5-10
Fig. 7 - Crankshaft Group 5-12
Fig. 8 - Manifolds Group 5-14
Fig. 9 - Flywheel Group 5-16
Fig. 10 - Camshaft And Sprocket Group 5-18
Fig. 11 - Valve And Rocker Arm Cover Group . . 5-20
Fig. 12 - Piston And Connecting Rod Group . . . 5-22
Fig. 13 - Water Pump, Thermostat and Fan Group 5-23
Fig. 14 - Ignition Group 5-24

Fig. 1 - Engine Block Group

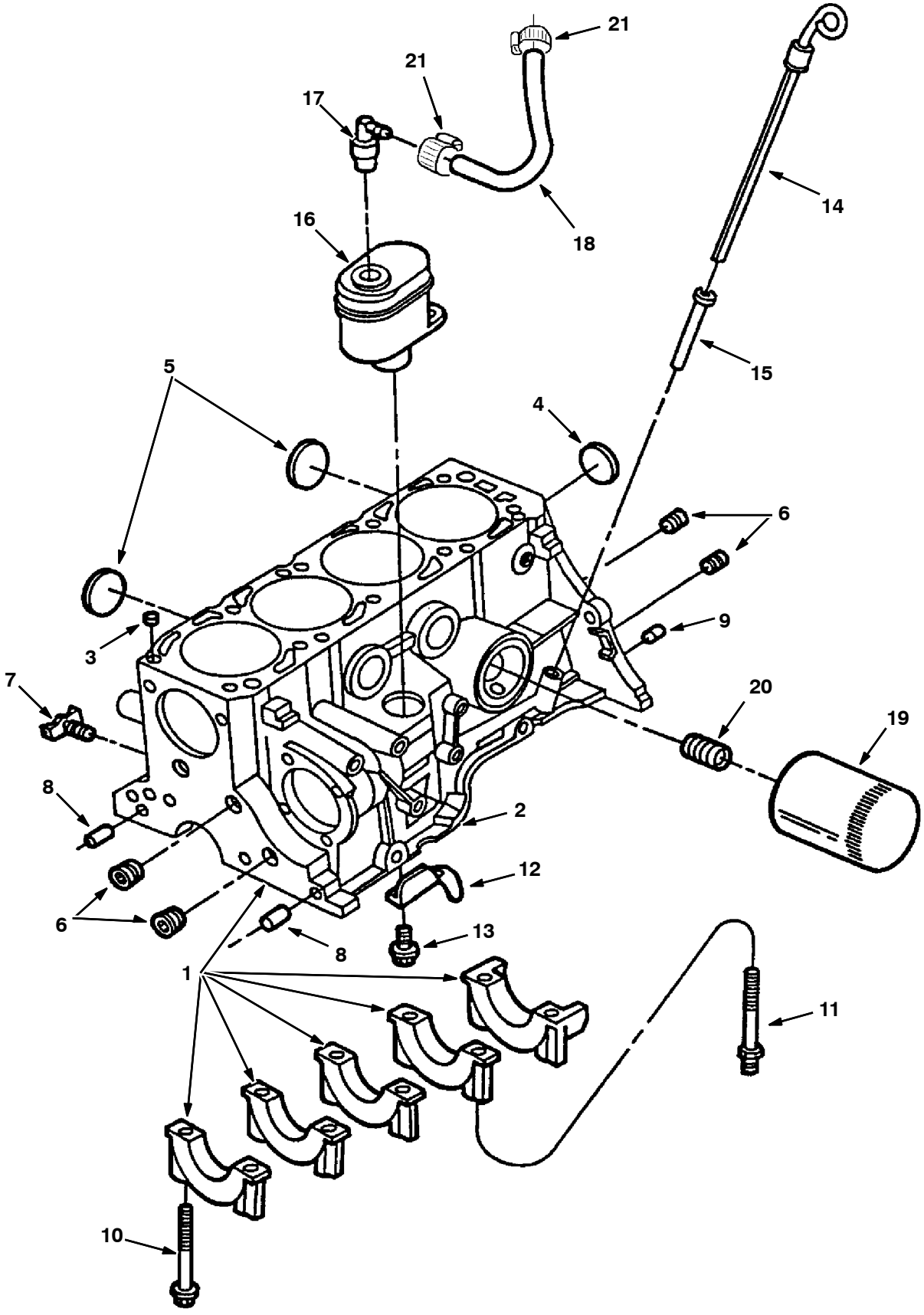

10525 - 800L, 8410, G, LP

Fig. 1 - Engine Block Group

	Ref.	Part No.	Description	Qty.
	1	84875	Cyl Block Assy (Short Block Assy)	1
▽	2	84876	Block Assy	1
▲	3	73958	Dowel	2
▲	4	73921	Plug- Std 2.078	1
▲	4	73920	Plug .06 O/S	-
▲	5	84877	Plug, 1.50 Cup	4
▲	6	73917	Plug 3/8 Npt	5
▲	6	36268	Plug 1/4 Npt	2
▲	7	54911- 32	Draincock,End.Block	1
▲	8	84878	Dowel,Frnt Cover	2
▲	9	73975	Dowel	2
▲	10	73950	Bolt M12	9
▲	11	74516	Stud M12	1
▲	12	84879	Baffle	1
	13	84880	Bolt, M6X16.5mm	2
	14	10723	Indicator,Oil	1
	15	10724	Short Tube	1
	16	84882	Separator	1
	17	84883	Pcv Vlv Asy	1
	18	84884	Hose	1
	19	39703- 2	Filter Element, Oil	1
	20	84962	Insert- Oilfilt	1
	21	54333	Clamp, Hose, Wormdrive	2

Fig. 2 - Gaskets Group

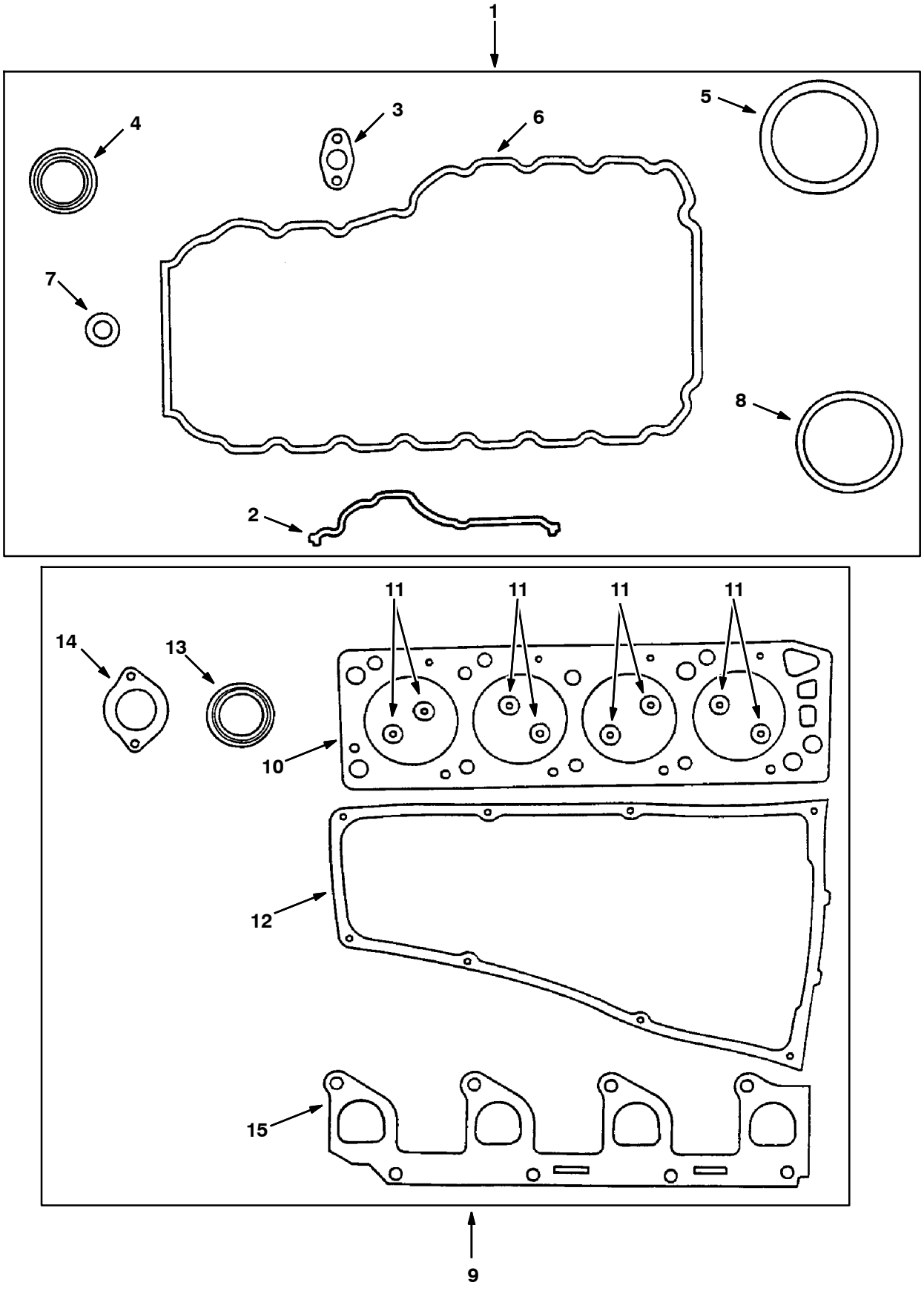

10444 - 800L, 8410, G, LP

Fig. 2 - Gaskets Group

	Ref.	Part No.	Description	Qty.
▽	1	84885	Gskt Kit,Lower	1
▲	2	84886	Gskt,Frnt Cvr	1
▲	3	84887	Gskt,Pmp/Putube	1
▲	4	60833	Oil Seal, Front	1
▲	5	84888	Seal, Rear	1
▲	6	84889	Gasket,Oil Pan	1
▲	7	37157	Gasket Oil	1
▲	8	84983	Gskt,Water Pump	1
▽	9	84891	Gskt Kit,Upper	1
▲	10	60806	Gasket, Head	1
▲	11	84892	Seal,Valve Stem	8
▲	12	84893	Gskt,Rockr Cvr	1
▲	13	60833	Oil Seal, Front	1
▲	14	74538	Gskt- Waterout	1
▲	15	84894	Gskt,In.Manfld	1

Fig. 3 - Cylinder Head Group

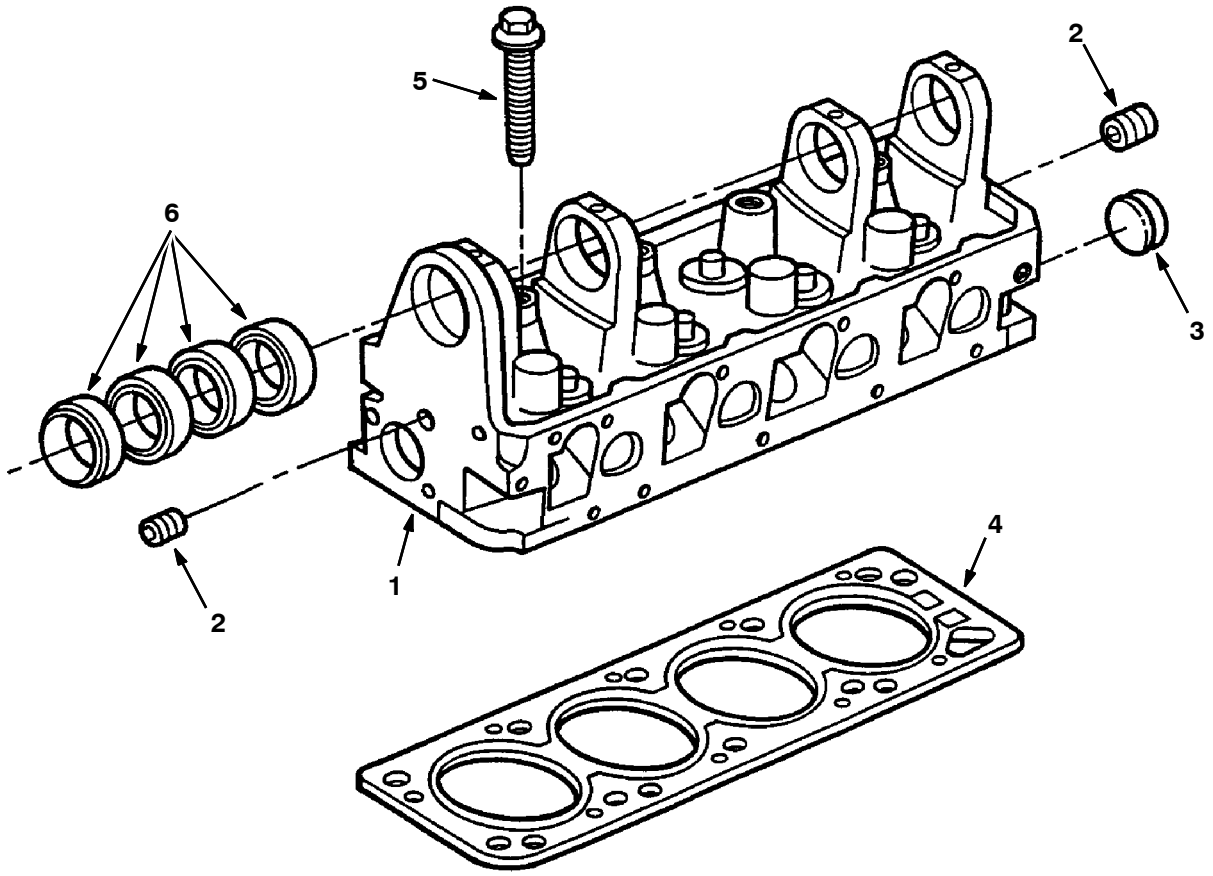

10445 - 800L, 8410, G, LP

Ref.	Part No.	Description	Qty.
1	84907	Head- W/O Valves	1
2	36268	Plug 1/4 Npt	2
3	84910	Plug,1.50 Cup	1
4	60806	Gasket, Head	1
5	73927	Bolt M12	10
6	60817	Bearing Cam,	4
6	73936	Bearing, .016 Camshaft	-

Fig. 4 - Cylinder Front Cover Group

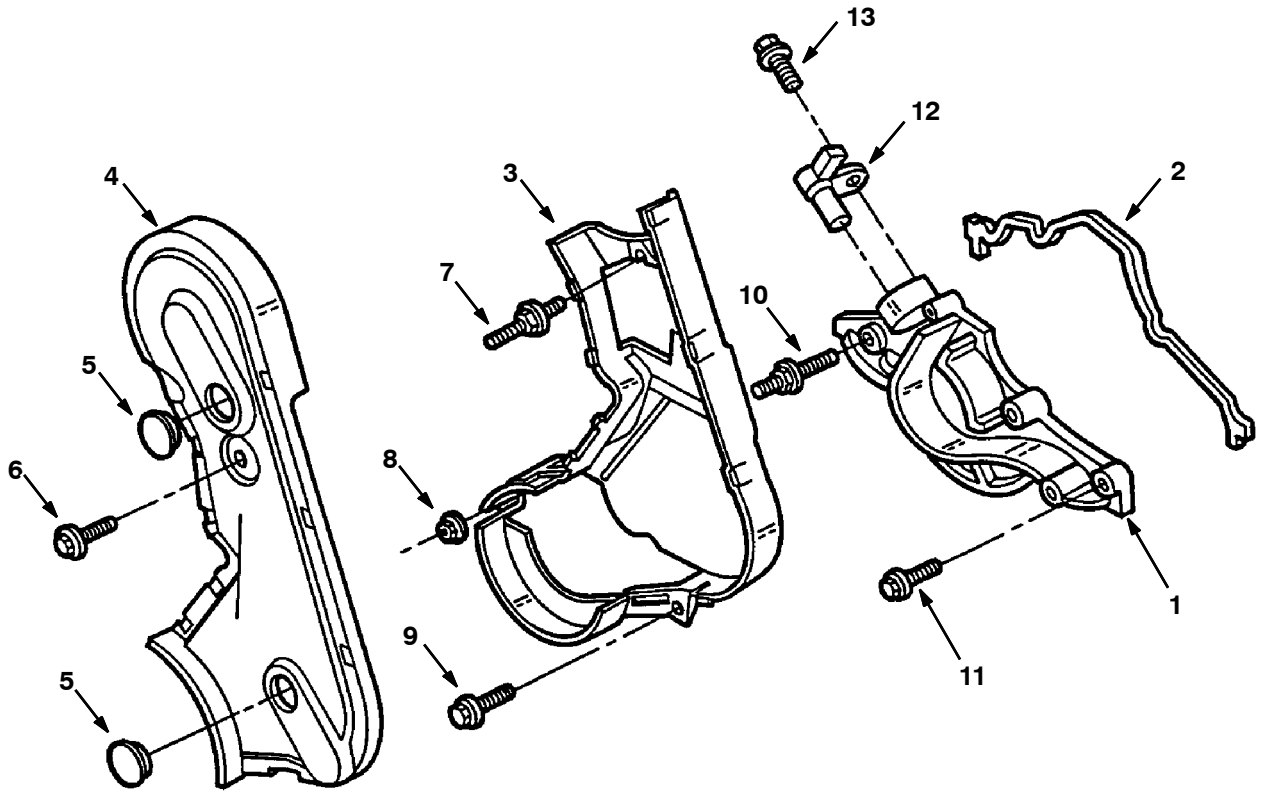

10446 - 800L, 8410, G, LP

Ref.	Part No.	Description	Qty.
1	84895	Lower Cover	1
2	84896	Gskt,Front Cvr	1
3	84897	Inner Cover	1
4	84898	Outer Cover	1
5	74536	Plug	2
6	84899	Bolt, M8 X 17 Schd	1
7	84900	Stud,M8X51.0mm	1
8	84901	Nut, M6	1
9	84902	Scr&Wsh,M6X22.5	1
10	84903	Stud,M6X61.8mm	1
11	84904	Bolt,M6X37.5mm	3
12	84905	Sensor,Crnksft	1
13	84906	Screw,M6X22.5mm	1

Fig. 5 - Starter Breakdown

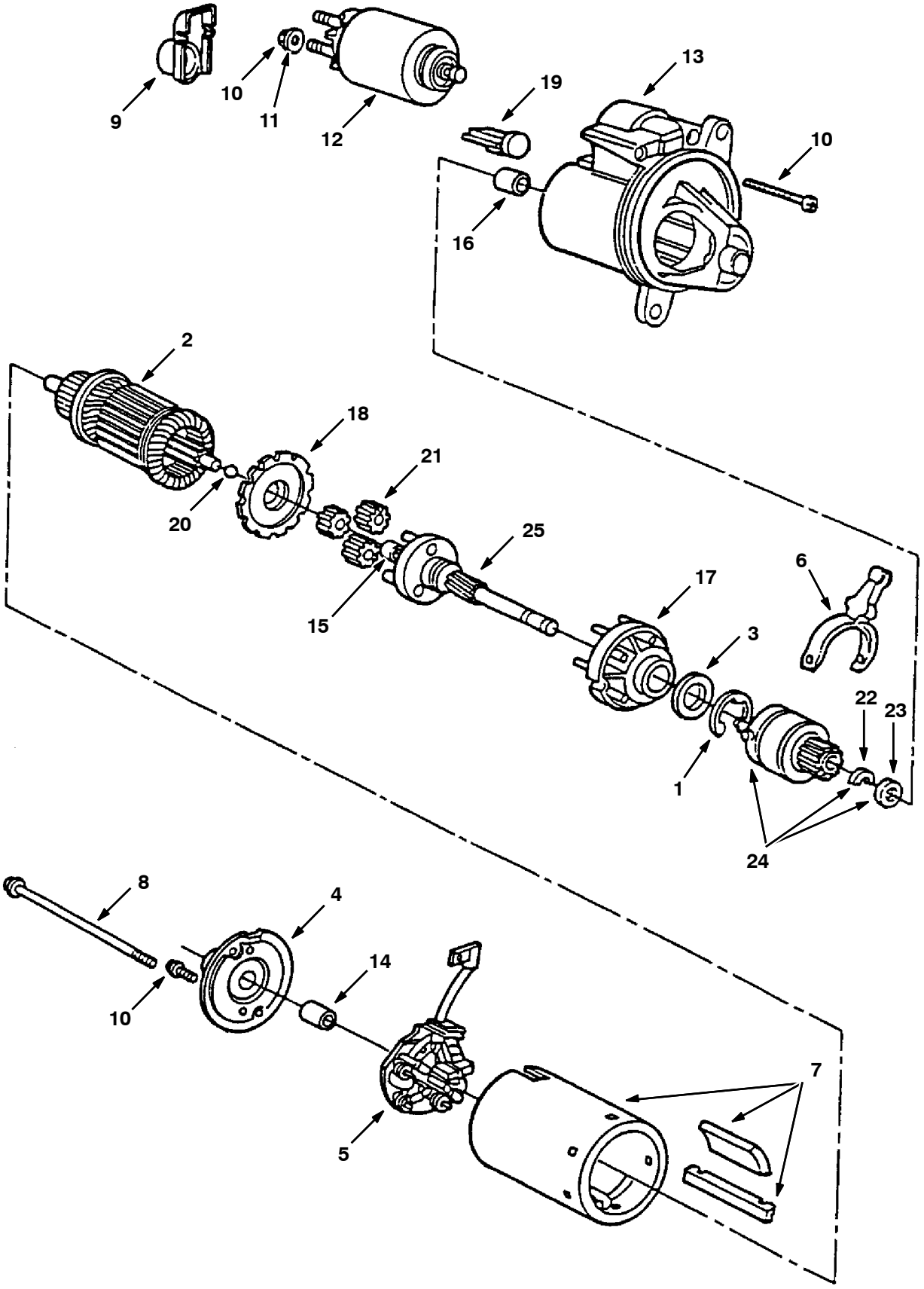

10523 - 800L, 8410, G, LP

Fig. 5 - Starter Breakdown

	Ref.	Part No.	Description	Qty.
▽		60938	Motor, Starting, Perm Mag, 12V	1
▲	1	79640	Retaining Ring	1
▲	2	84999	Armature	1
▲	3	79956	Washer	1
▲	4	79628	Plate & Brg	1
▲	5	79629	Brush Holder	1
▲	6	79630	Lever	1
▲	7	79631	Frame&Mag.As	1
▲	8	79632	Bolt- Thru	2
▲	9	79970	Term.Cover	1
▲▽	10	79633	Kit- Attaching	1
▲▲	11	79957	Nut&Washer,M8	1
▲	12	370829	Solenoid	1
▲	13	79634	Hsg W/Brg	1
▲	14	79635	Bearing	1
▲	15	79960	Planet Bearing	3
▲	16	79961	Bearing	1
▲	17	79962	Statnry Gear	1
▲	18	79963	Retnr.Gear	1
▲	19	79964	Seal	1
▲	20	79965	Arm.Thr.Ball	1
▲	21	79966	Gear Assy	3
▲	22	79636	Ring- Drv.Stop	1
▲	23	79967	Retainer	1
▲	24	79638	Drive Assy	1
▲	25	79969	Shft Asy,Output	1

Fig. 6 - Oil Pan Group

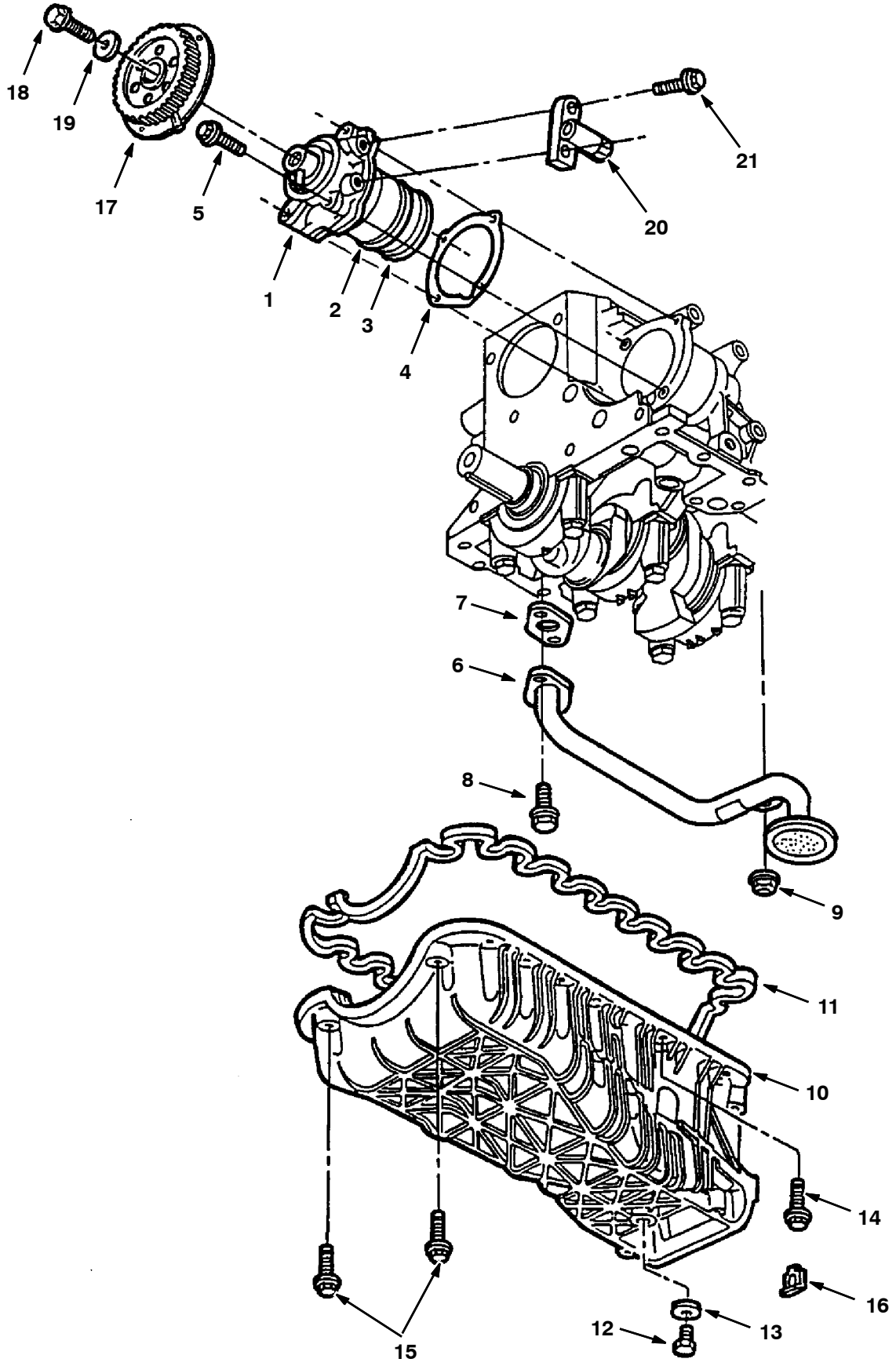

10522 - 800L, 8410, G, LP

Fig. 6 - Oil Pan Group

Ref.	Part No.	Description	Qty.
1	84963	Oil Pump	1
2	84964	O- Ring,2.375	1
3	84965	O- Ring- 2.250	1
4	84966	Gskt,Oilpmp/Blk	1
5	84967	Bolt,M6X47.5mm	4
6	84968	Oil Pickup Tube	1
7	84969	Gskt,Pu Tube	1
8	84970	Bolt,M8X20.0mm	2
9	84971	Nut,M10	1
10	84972	Oil Pan Assy	1
11	84889	Gasket,Oil Pan	1
12	37127	Oil Plug	1
13	37157	Gasket Oil	1
14	84973	Bolt,M6X27.5mm	16
15	84974	Bolt,M6X52.5mm	2
16	84975	Oil Pan Spacer	-
16	84976	Oil Pan Spacer	-
16	84977	Oil Pan Spacer	-
17	84978	Oil Pmp Sprkt	1
18	84979	Bolt,M10X40.0mm	1
19	74561	Washer	1
20	84980	Camsft.Sensor	1
21	84981	Bolt,M5X20.0M	2

Fig. 7 - Crankshaft Group

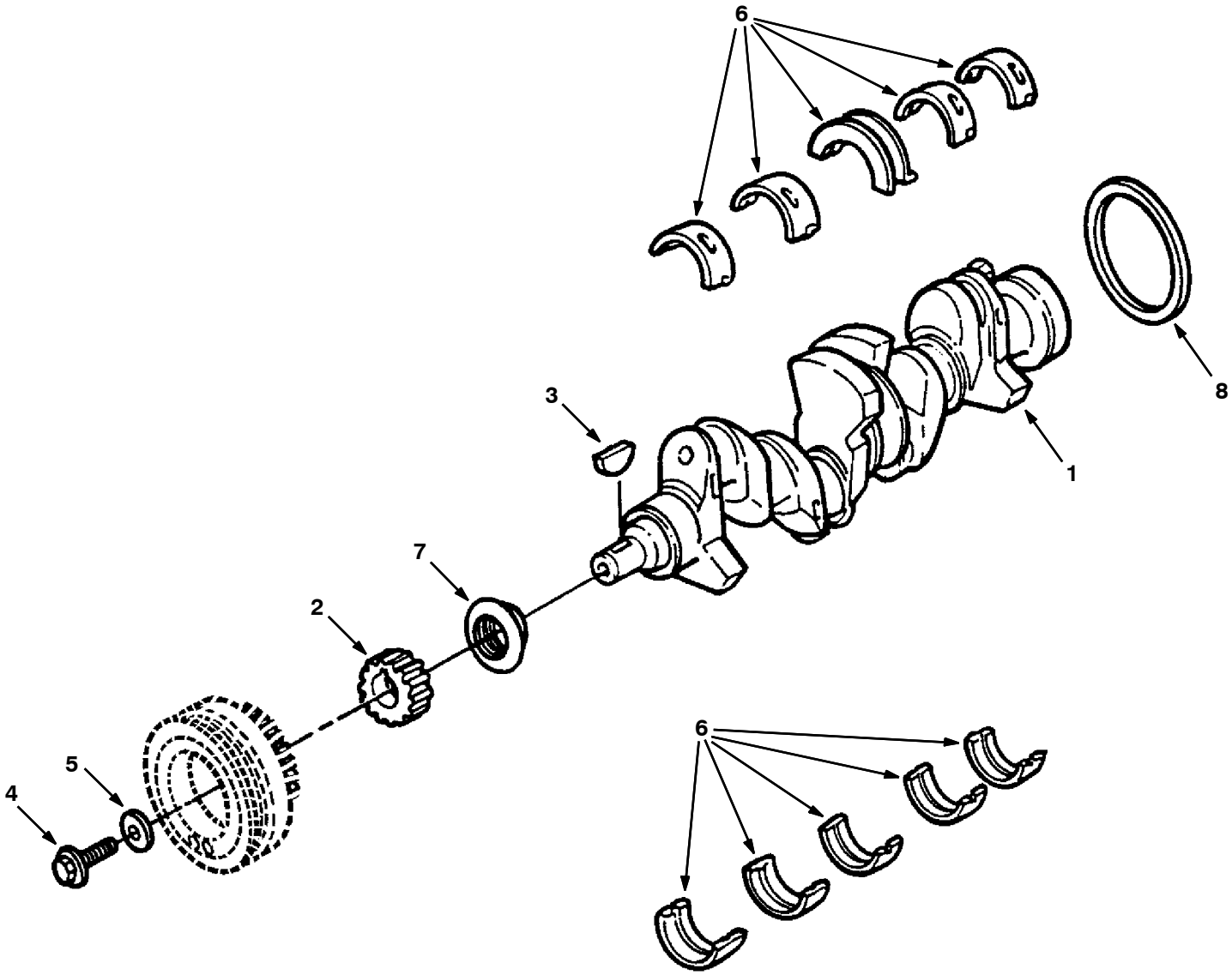

10526 - 800L, 8410, G, LP

Fig. 7 - Crankshaft Group

Ref.	Part No.	Description	Qty.
1	84923	Crankshaft Asy	1
2	84924	Crnksft Sprckt	1
3	84925	Crnkshaft Key	1
4	84926	Bolt,M14X55.0M	1
5	84927	Wash M15 1.53Od	1
6	1051175	Bearing Kit, Cshft, Std[F2.3/2.5l]	4
6	1051167	Bearing Kit, Cshft, .040[F2.3/2.5l]	-
6	1051174	Bearing Kit, Cshft, .010[F2.3/2.5l]	-
6	1051173	Bearing Kit, Cshft, .020[F2.3/2.5l]	-
6	1051172	Bearing Kit, Cshft, .030[F2.3/2.5l]	-
7	60833	Oil Seal, Front	1
8	84947	Crnksft Seal- Rear	1

Fig. 8 - Manifolds Group

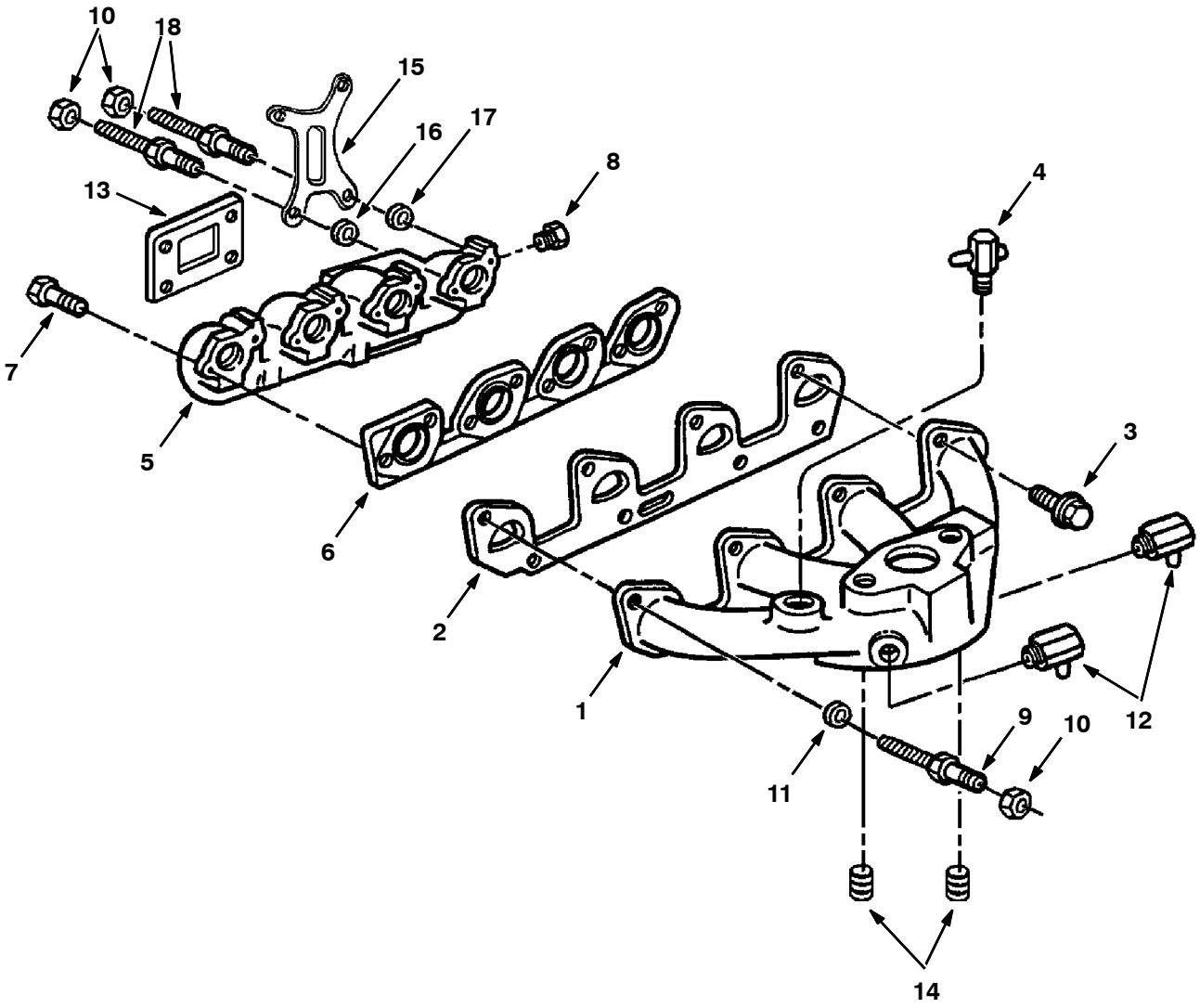

10529 - 800L, 8410, G, LP

Fig. 8 - Manifolds Group

Ref.	Part No.	Description	Qty.
1	84990	Int.Manifold	1
2	84991	Gskt,Int.Mnfld	1
3	84992	Bolt,M8X25.0mm	7
4	74527	Vac.Fitting	1
5	74509	Exh.Manifold	1
6	84995	Gskt,Exh.Mnfld	1
7	84996	Bolt,M10X55.0M	6
8	84997	Plug, 1/2Npt	1
9	79972	Stud	1
10	79973	Nut M8- 1.25	3
11	79974	Spacer	1
12	84985	Elbow,90 deg	2
13	36048	Gasket, Exh. Flange	1
14	73917	Plug 3/8 NPT	2
15	79976	Lifting Eye	1
16	21792	Spacer	1
17	21793	Spacer	1
18	21794	Stud	2

Fig. 9 - Flywheel Group

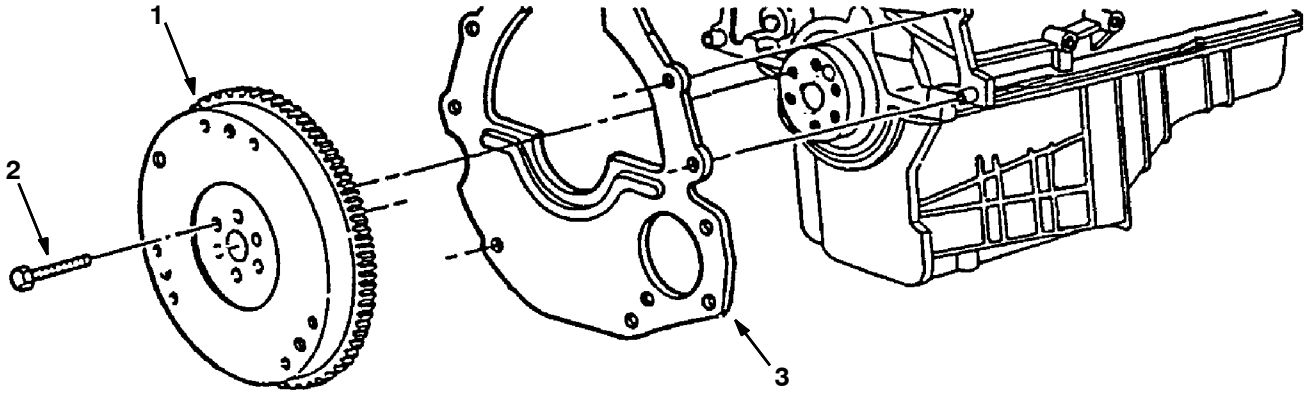

10527 - 800L, 8410, G, LP

Fig. 9 - Flywheel Group

Ref.	Part No.	Description	Qty.
1	370103	Replm Kit, Flywheel	1
	370102	Flywheel	1
	84659	Flywheel Ring Gear	1
2	64038	Bolt	12
3	83669	Rear Plate	12

Fig. 10 - Camshaft And Sprocket Group

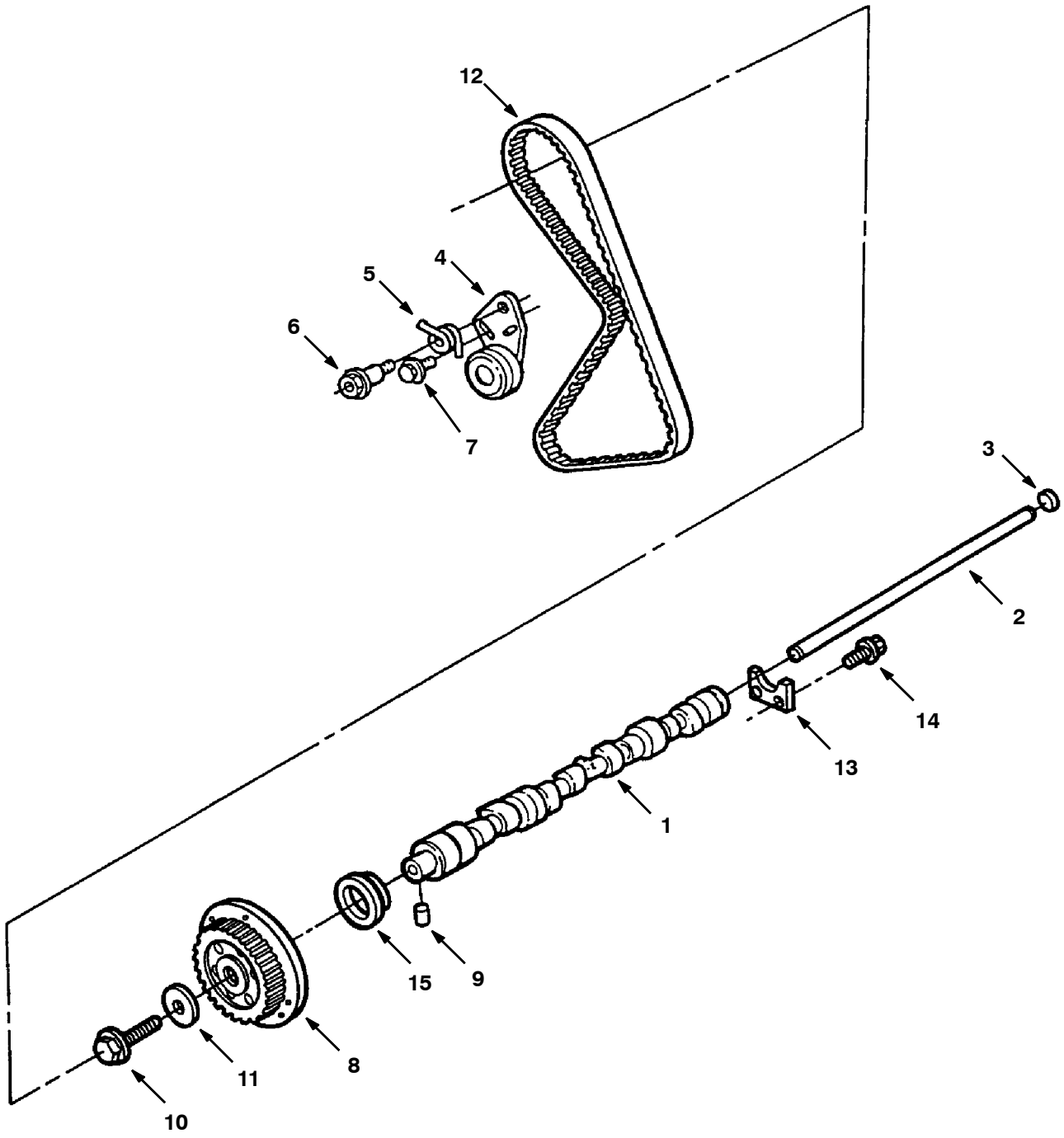

10520 - 800L, 8410, G, LP

Fig. 10 - Camshaft And Sprocket Group

Ref.	Part No.	Description	Qty.
1	84915	Camshaft	1
2	84916	Rod	1
3	84917	Plug	1
4	73967	Tensioner, Arm	1
5	73970	Spring, Tension	1
6	84919	Bolt,Tens.Sprn	1
7	74552	Bolt	1
8	84978	Camshft Sprckt	1
9	84921	Pin, 1/4X.32	1
10	74545	Bolt M12X45	1
11	73937	Washer	1
12	84936	Timing Belt	1
13	73954	Plate	1
14	74548	Scr&Wash M6	2
15	60833	Oil Seal, Front	1

Fig. 11 - Valve And Rocker Arm Cover Group

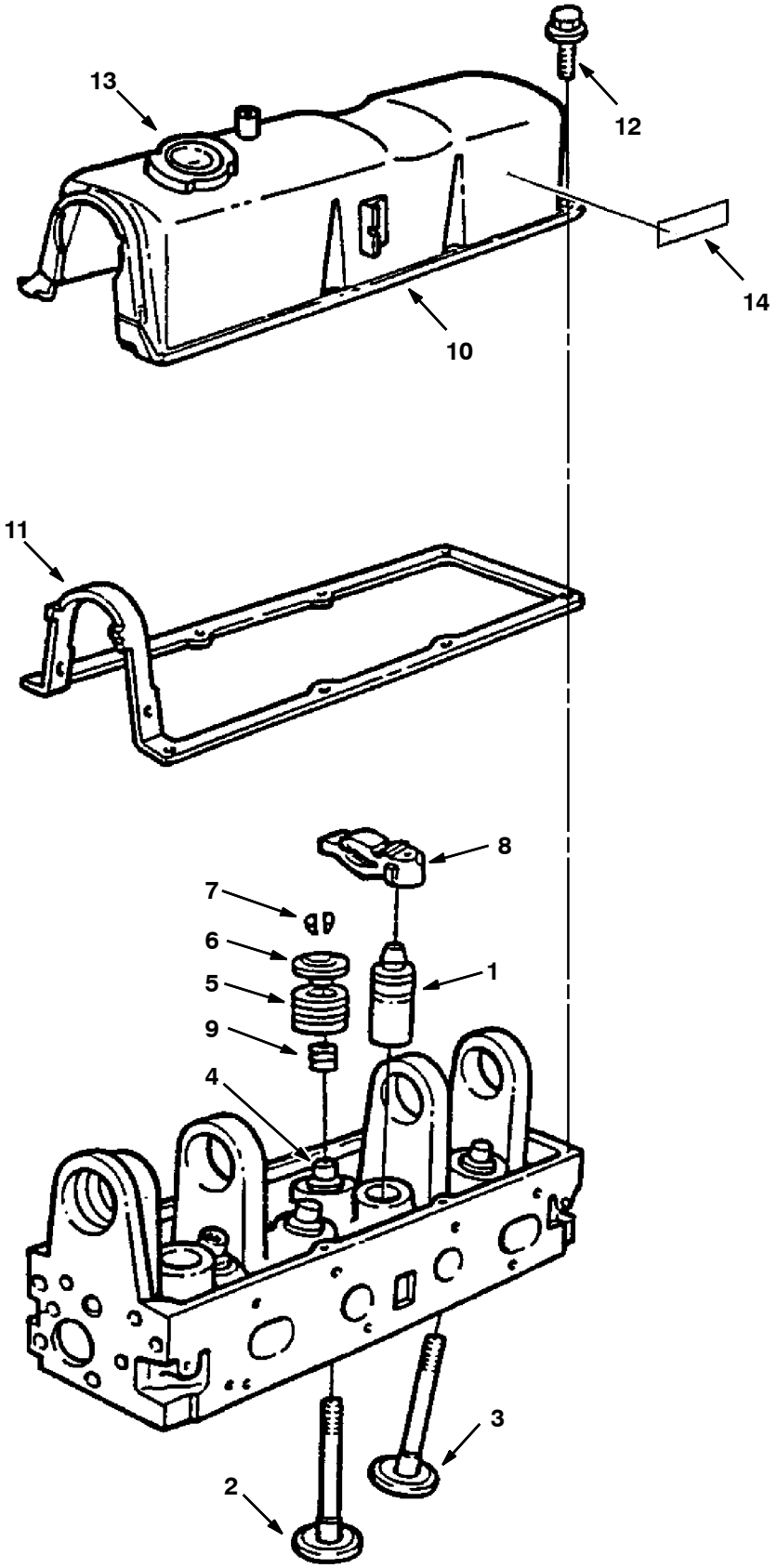

10521 - 800L, 8410, G, LP

Fig. 11 - Valves And Rocker Arm Cover Group

Ref.	Part No.	Description	Qty.
1	84950	Tap.Assy- Valve	8
2	84951	Std.Exh.Valve	4
3	84952	Std.Int.Valve	4
4	84953	Valve Guide Bushing	-
5	84954	Valve Spring	8
6	84955	Valve Spring Retainer	8
7	84956	Valve Spring Key	16
8	84957	Valve Rocker Arm	8
9	84958	Valve Stem Seal	8
10	370876	Valve Rocker Arm Cover	1
11	73995	Gasket,Rocker Cover	1
12	84961	Scr&Wsh,M6X15.0M	8
13	60836	Breather Cap	1
14	36164	Warning Label, Starter	1

Fig. 12 - Piston And Connecting Rod Group

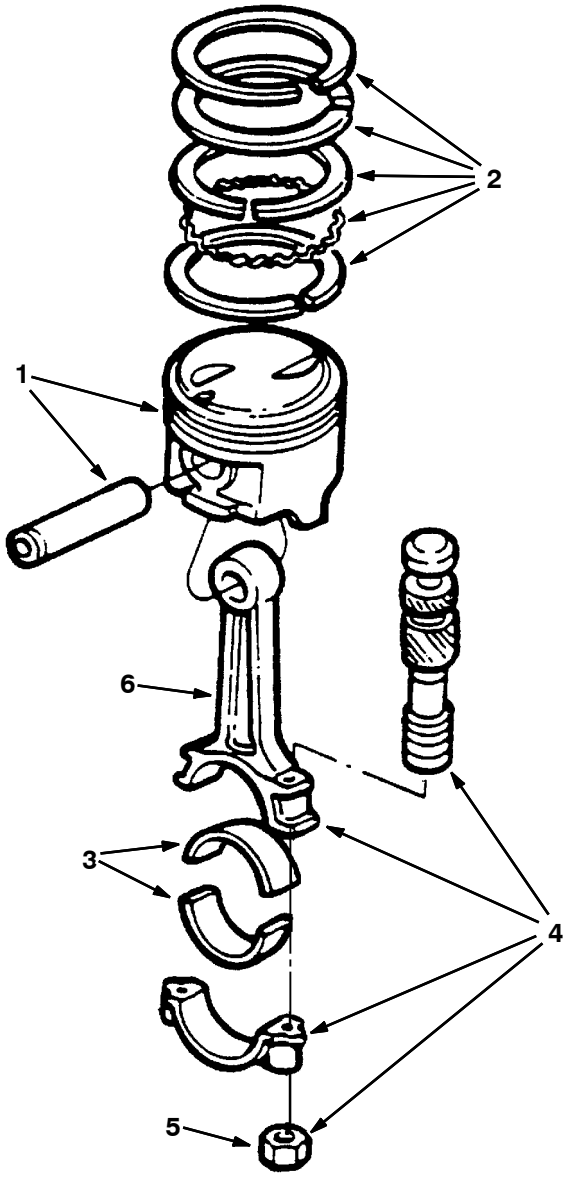

10447 - 800L, 8410, G, LP

	Ref.	Part No.	Description	Qty.
	1	84911	Piston, Std.	4
	2	84913	Ring Set,Std.	2
	3	60812	Bearing	8
	3	73977	Brg- Conn.Rod	-
	3	73978	Brg- Conn.Rod	-
	3	73979	Brg- Conn.Rod	-
	3	73980	Brg- Conn.Rod	-
	3	73981	Brg- Conn.Rod	-
	3	73982	Brg- Conn.Rod	-
▽	4	84914	Connecting Rd	4
▲	5	60813	Nut, Conrod- 8	8
▲	6	60814	Bolt- Conrod- 4	8

Fig. 13 - Water Pump, Thermostat and Fan Group

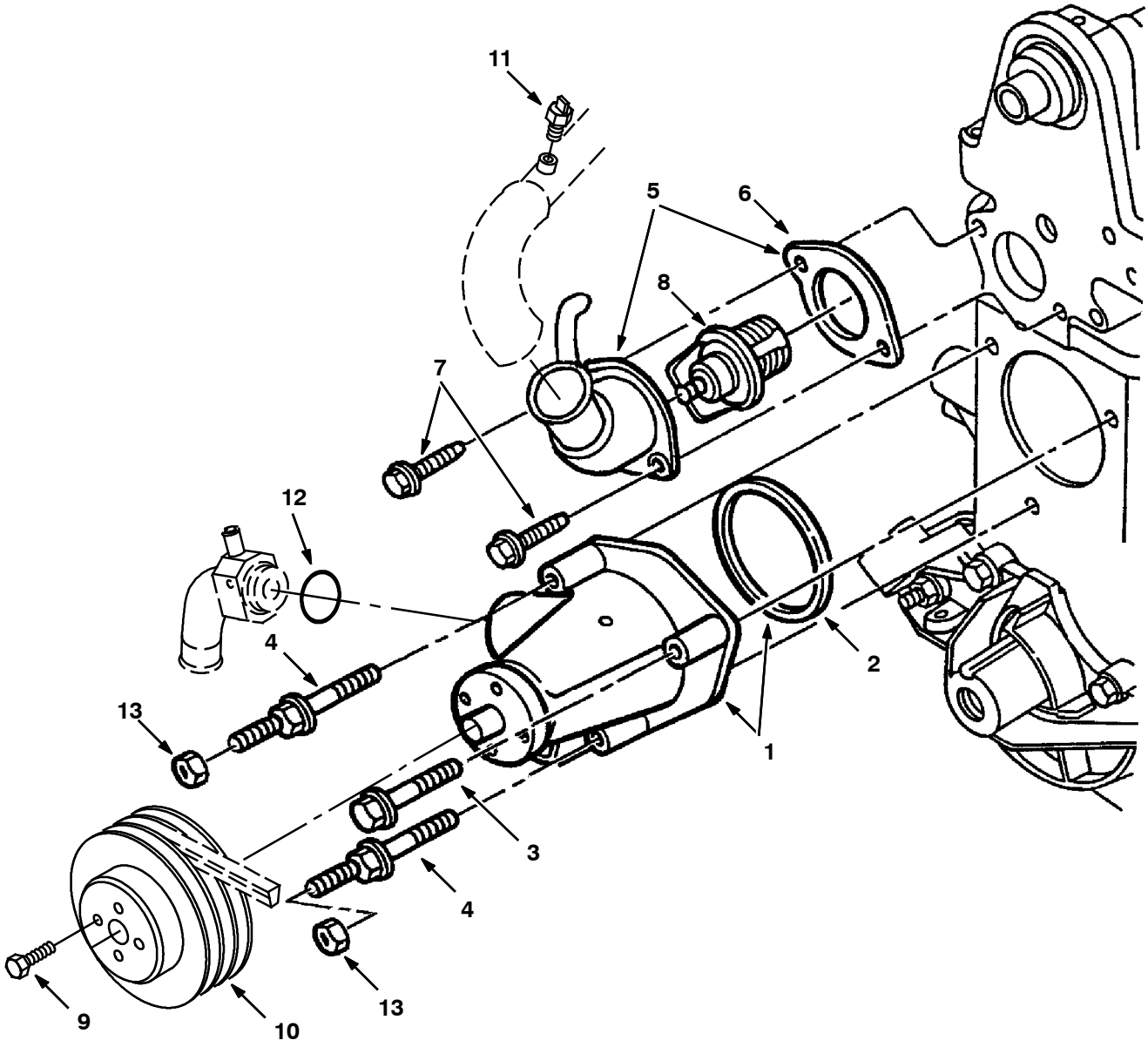

10528 - 800L, 8410, G, LP

	Ref.	Part No.	Description	Qty.
▽	1	84982	Water Pump	1
▲	2	84983	Gskt,Water Pump	1
	3	84984	Bolt,M8X53.0mm	1
	4	84998	Stud	2
▽	5	73996	Water Outlet	1
▲	6	74538	Gasket Water Outlet Connection	1
	7	84988	Bolt,M8X18.0M	2
	8	84987	Therm 190 W/Gsk	1
	9	84994	Bolt, M8X12.0mm	1
	10	36014	Sheave, Water Pump	1
	11	84989	Temperature sensor	1
	12	79975	O- Ring, Water Pump Adaptor	1
	13	84993	Locknut	2

Fig. 14 - Ignition Group

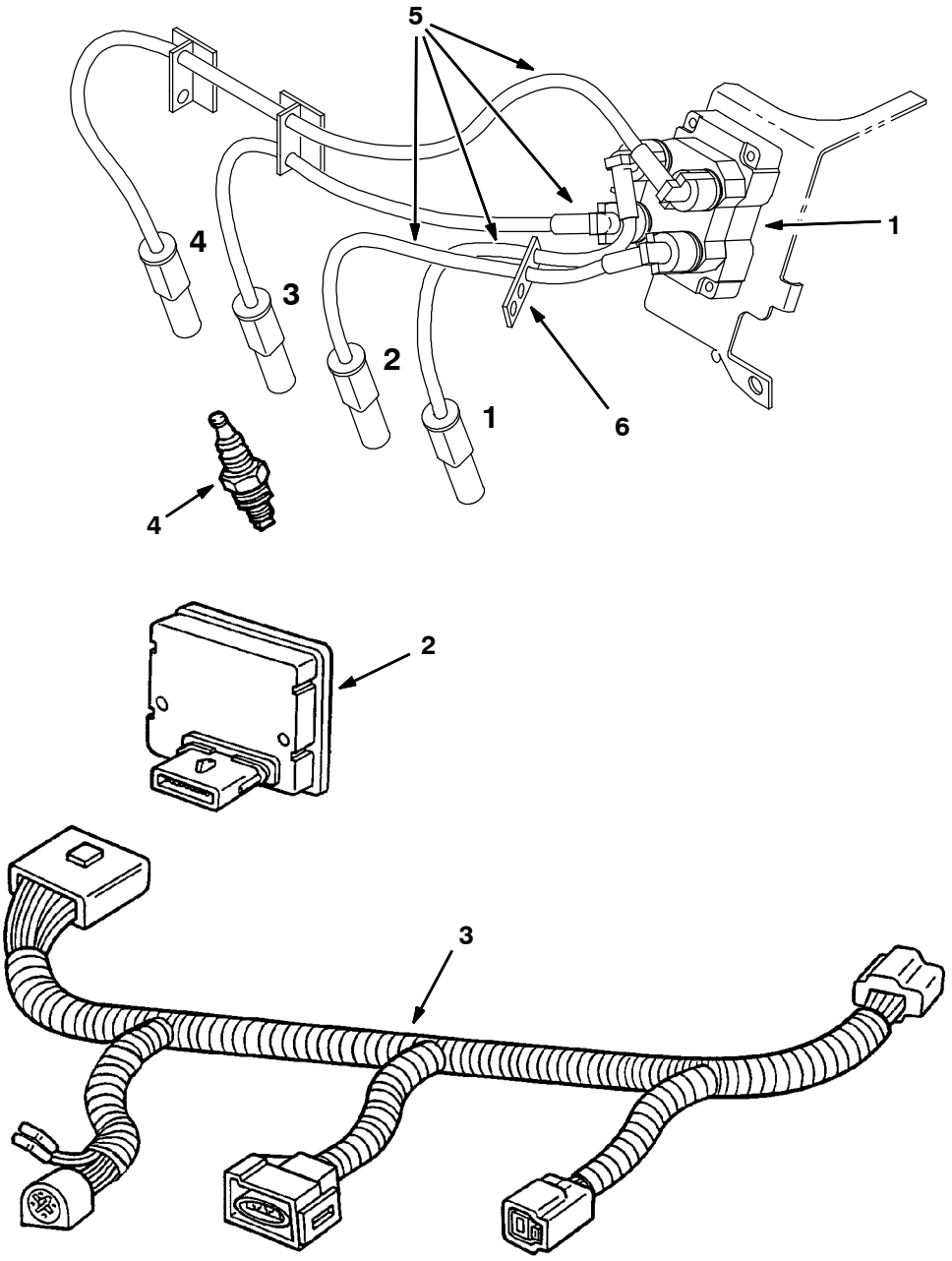

10524- 350562 - 800L, 8410, G, LP

Ref.	Part No.	Description	Qty.
1	83732	Ignition Coil	1
2	9003676	Module Kit, Ignition, Replmt [Ford 2.3l]	1
3	83707	Wire Harness	1
4	60846	Spark Plug	4
5	83677	Wire Asy,Spark Plug	1
6	84882	Separator	1

SECTION 6

Contents **Page**

Fig. 1 - Engine Block Group 6-2
Fig. 2 - Gaskets Group 6-4
Fig. 3 - Cylinder Head Group 6-6
Fig. 4 - Cylinder Front Cover Group 6-7
Fig. 5 - Starter Breakdown 6-8
Fig. 6 - Oil Pan Group 6-10
Fig. 7 - Crankshaft Group 6-12
Fig. 8 - Manifolds Group 6-14
Fig. 9 - Flywheel Group 6-16
Fig. 10 - Camshaft And Sprocket Group 6-18
Fig. 11 - Valve And Rocker Arm Cover Group . . 6-20
Fig. 12 - Piston And Connecting Rod Group . . . 6-22
Fig. 13 - Water Pump, Thermostat and Fan Group 6-23
Fig. 14 - Ignition Group 6-24

Fig. 1 - Engine Block Group

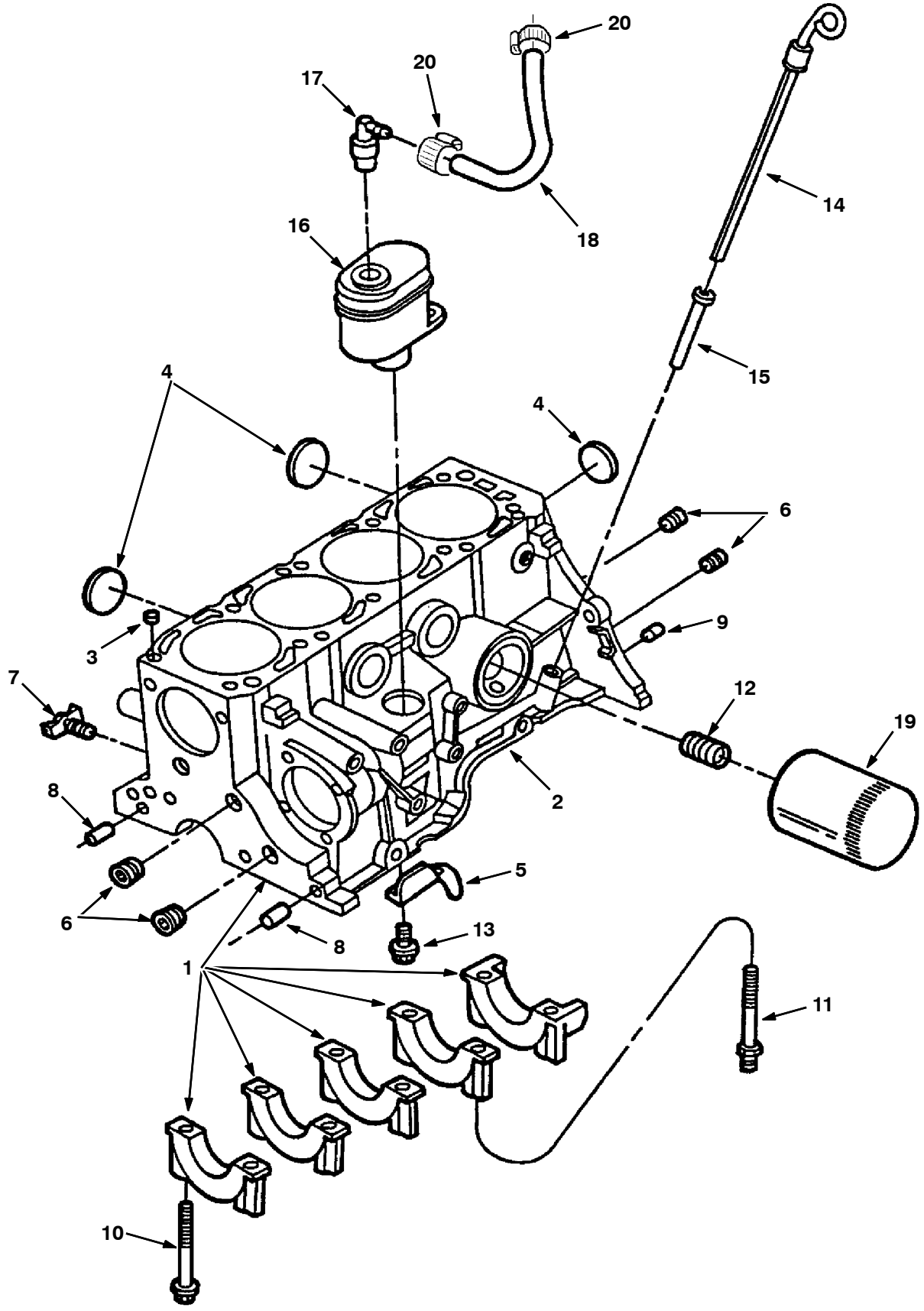

10525 - 800L, 8410, G, LP

Fig. 1 - Engine Block Group

	Ref.	Part No.	Description	Qty.
	1	370847	Cyl Block Assy (Short Block Assy)	1
V	2	370848	Block Assy	1
▲	3	73958	Dowel	2
▲	4	73921	Plug- Std 2.078	5
▲	4	73920	Plug .06 O/S	-
▲	5	84879	Baffle	1
▲	6	73917	Plug 3/8 Npt	5
▲	6	36268	Plug 1/4 Npt	2
▲	7	54911- 32	Draincock,End.Block	1
▲	8	84878	Dowel,Frnt Cover	2
▲	9	370873	Dowel	2
▲	10	73950	Bolt M12	9
▲	11	74516	Stud M12	1
	12	84962	Insert- Oilfilt	1
	13	84880	Bolt, M6X16.5mm	2
	14	370850	Indicator,Oil	1
	15	10724	Short Tube	1
	16	84882	Separator	1
	17	84883	Pcv Vlv Asy	1
	18	84884	Hose	1
	19	39703- 2	Filter Element, Oil	1
	20	54333	Clamp, Hose, Wormdrive	2

Fig. 2 - Gaskets Group

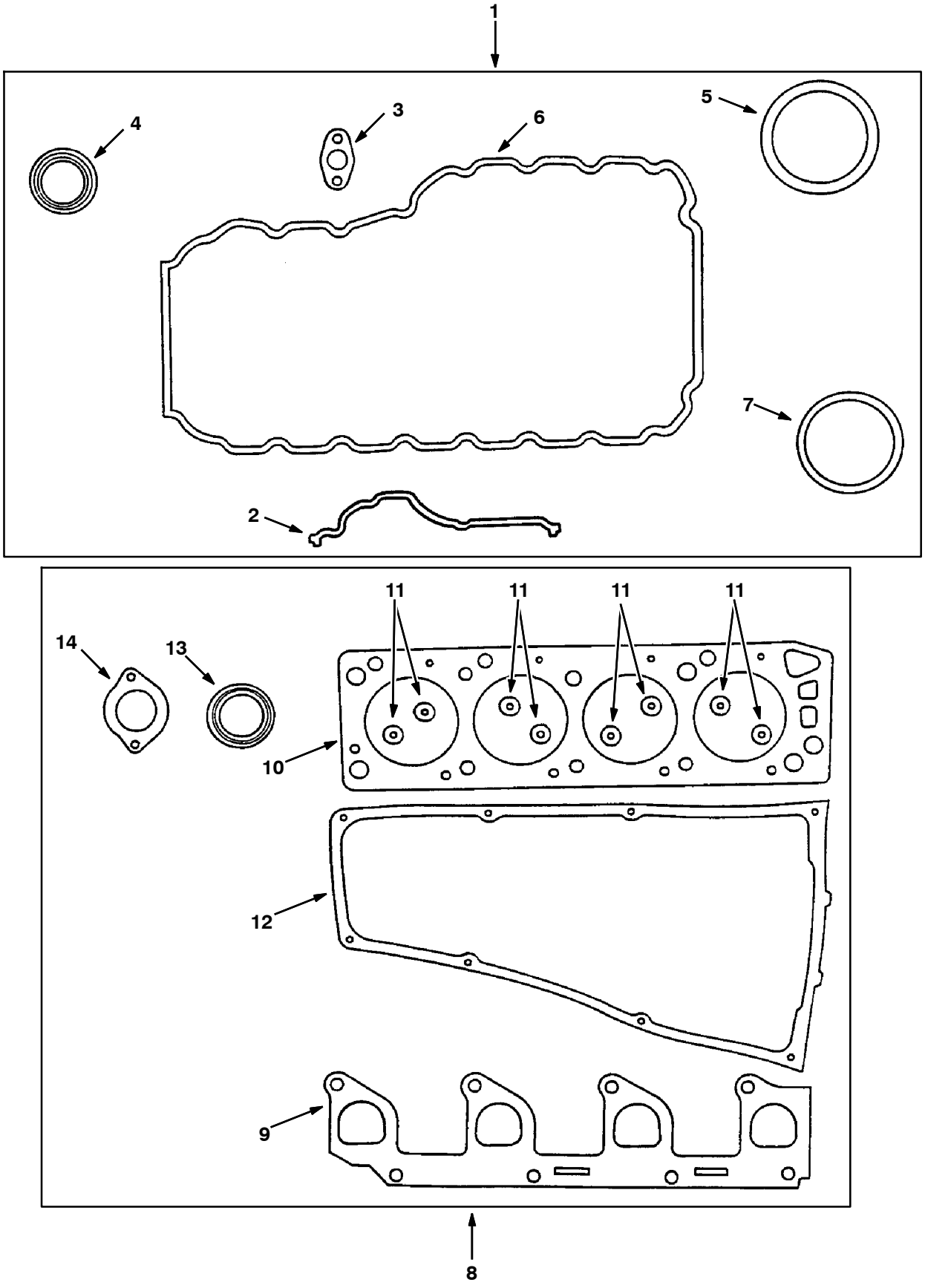

10444 - 800L, 8410, G, LP

Fig. 2 - Gaskets Group

	Ref.	Part No.	Description	Qty.
∇	1	370851	Gskt Kit,Lower	1
▲	2	84896	Gskt,Frnt Cvr	1
▲	3	84887	Gskt,Pmp/Putube	1
▲	4	60833	Oil Seal, Front	1
▲	5	60834	Seal, Rear	1
▲	6	84889	Gasket,Oil Pan	1
▲	7	84983	Gskt,Water Pump	1
∇	8	84891	Gskt Kit,Upper	1
▲	9	84991	Gskt,In.Manfld	1
▲	10	60806	Gasket, Head	1
▲	11	84958	Seal,Valve Stem	8
▲	12	73995	Gskt,Rockr Cvr	1
▲	13	60833	Oil Seal, Front	1
▲	14	74538	Gskt- Waterout	1

Fig. 3 - Cylinder Head Group

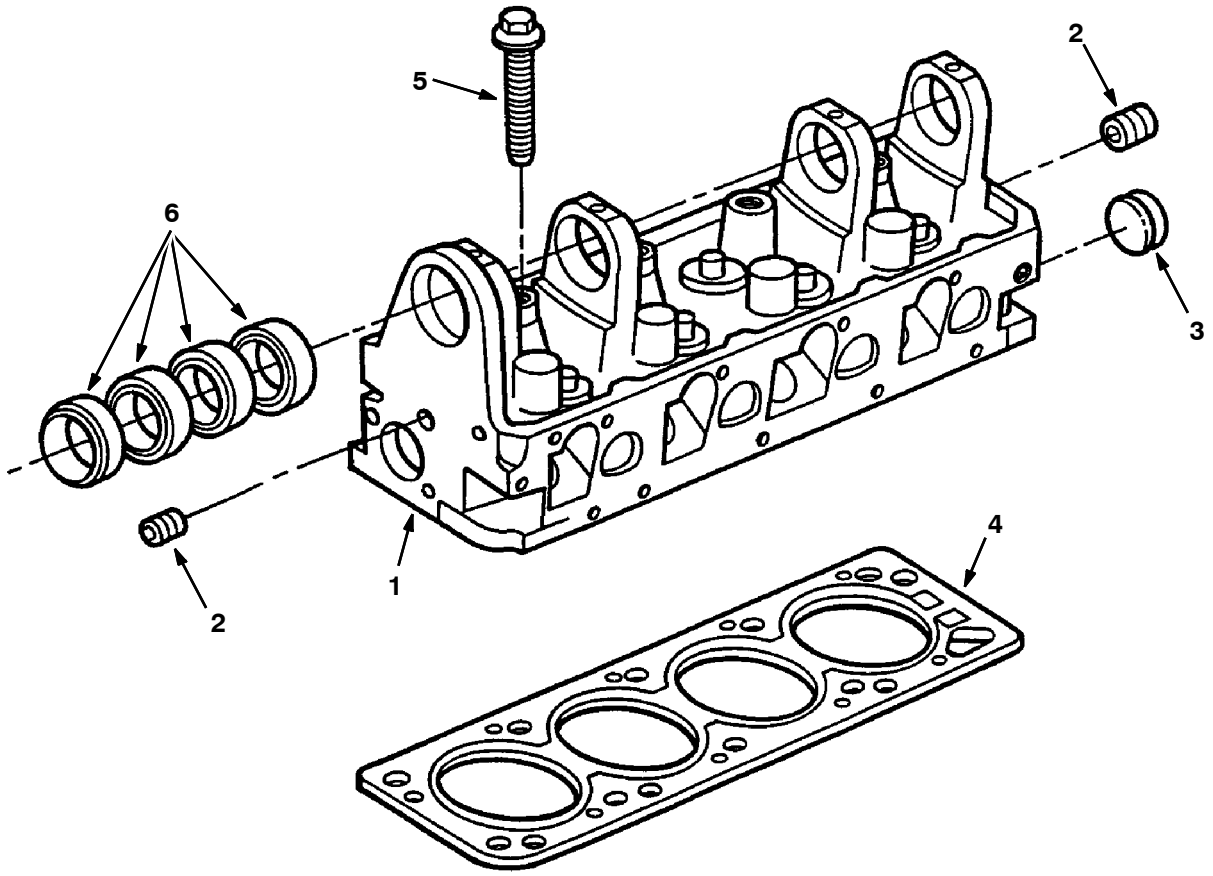

10445 - 800L, 8410, G, LP

Ref.	Part No.	Description	Qty.
1	84907	Head- W/O Valves	1
2	36268	Plug 1/4 Npt	2
3	84910	Plug,1.50 Cup	1
4	60806	Gasket, Head	1
5	73927	Bolt M12	10
6	60817	Bearing Cam,	4
6	73936	Bearing, .016 Camshaft	-

Fig. 4 - Cylinder Front Cover Group

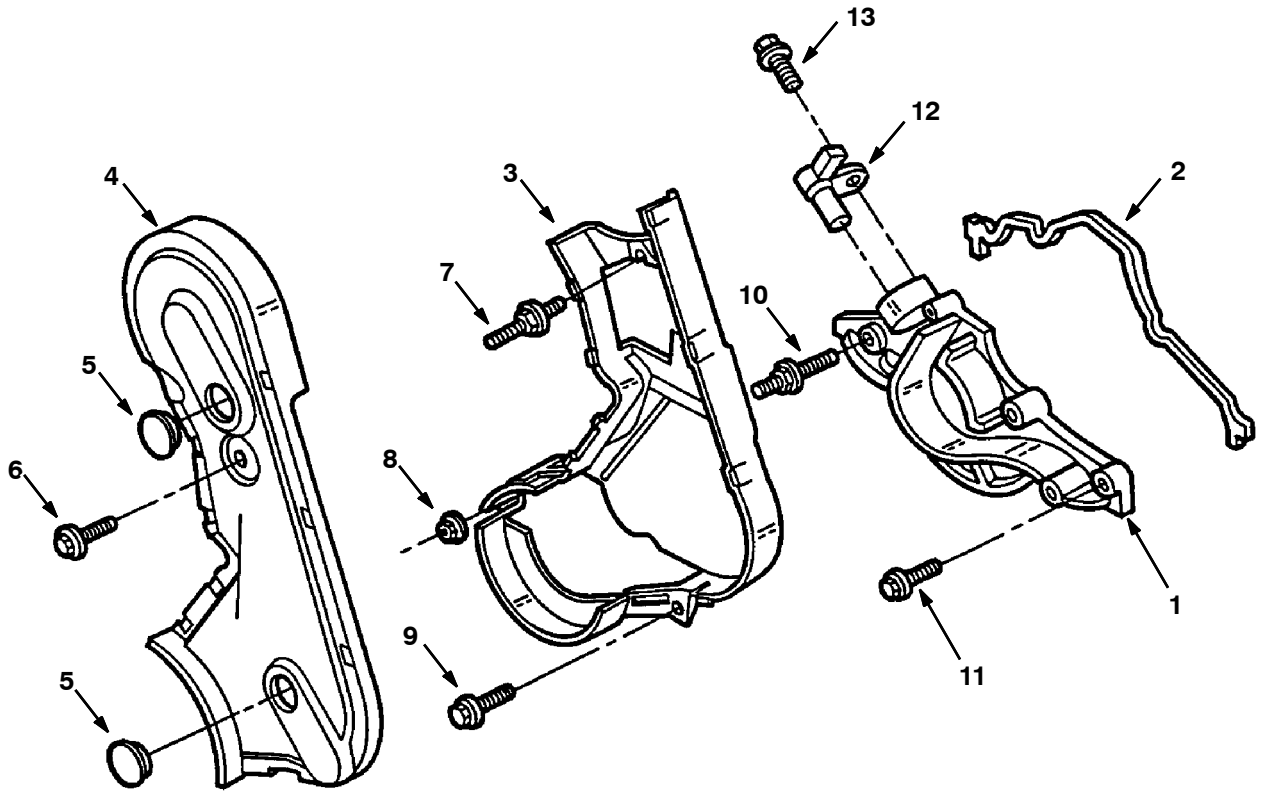

10446 - 800L, 8410, G, LP

Ref.	Part No.	Description	Qty.
1	84895	Lower Cover	1
2	84896	Gskt,Front Cvr	1
3	84897	Inner Cover	1
4	84898	Outer Cover	1
5	74536	Plug	2
6	84899	Bolt, M8 X 17 Schd	1
7	84900	Stud,M8X51.0mm	1
8	84901	Nut, M6	1
9	84902	Scr&Wsh,M6X22.5	1
10	84903	Stud,M6X61.8mm	1
11	84904	Bolt,M6X37.5mm	3
12	84905	Sensor,Crnksft	1
13	84906	Screw,M6X22.5mm	1

Fig. 5 - Starter Breakdown

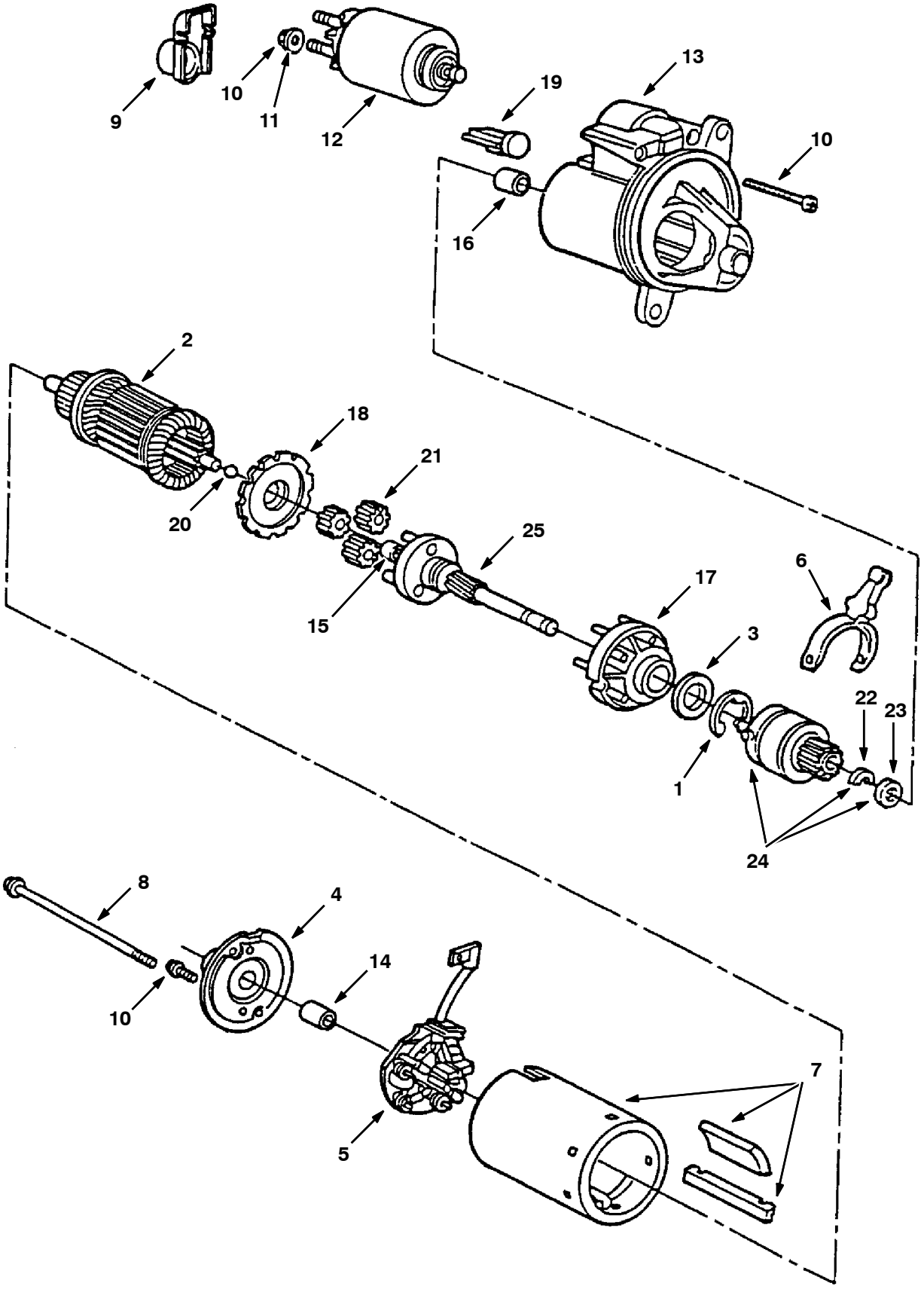

10523 - 800L, 8410, G, LP

Fig. 5 - Starter Breakdown

	Ref.	Part No.	Description	Qty.
∇		60938	Motor, Starting, Perm Mag, 12V	1
▲	1	79640	Retaining Ring	1
▲	2	84999	Armature	1
▲	3	79956	Washer	1
▲	4	79628	Plate & Brg	1
▲	5	79629	Brush Holder	1
▲	6	79630	Lever	1
▲	7	79631	Frame&Mag.As	1
▲	8	79632	Bolt- Thru	2
▲	9	79970	Term.Cover	1
▲∇	10	79633	Kit- Attaching	1
▲▲	11	79957	Nut&Washer,M8	1
▲	12	370829	Solenoid	1
▲	13	79634	Hsg W/Brg	1
▲	14	79635	Bearing	1
▲	15	79960	Planet Bearing	3
▲	16	79961	Bearing	1
▲	17	79962	Statnry Gear	1
▲	18	79963	Retnr.Gear	1
▲	19	79964	Seal	1
▲	20	79965	Arm.Thr.Ball	1
▲	21	79966	Gear Assy	3
▲	22	79636	Ring- Drv.Stop	1
▲	23	79967	Retainer	1
▲	24	79638	Drive Assy	1
▲	25	79969	Shft Asy,Output	1

Fig. 6 - Oil Pan Group

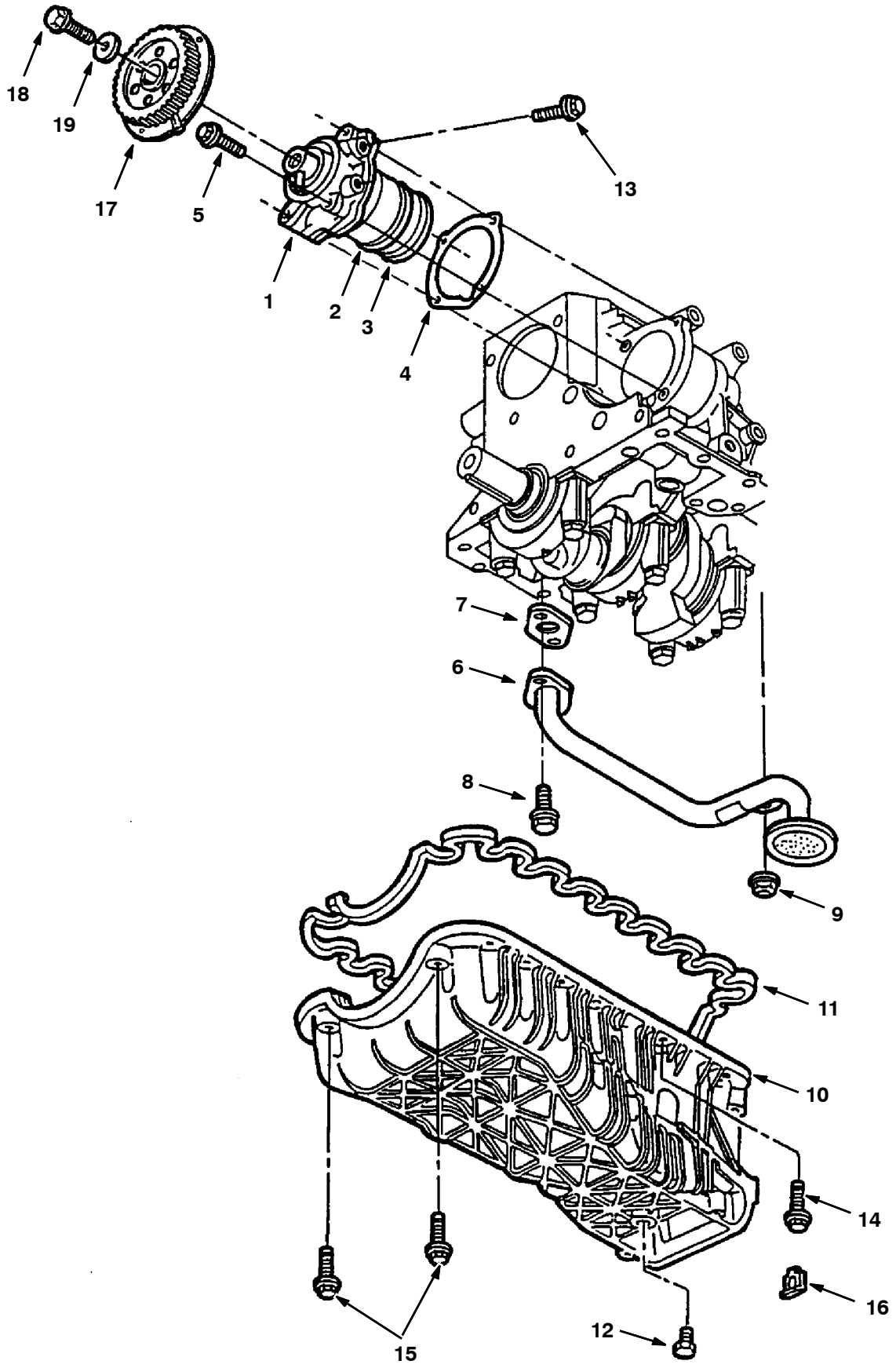

10522 - 800L, 8410, G, LP

Fig. 6 - Oil Pan Group

Ref.	Part No.	Description	Qty.
1	84963	Oil Pump	1
2	84964	O- Ring,2.375	1
3	84965	O- Ring- 2.250	1
4	84966	Gskt,Oilpmp/Blk	1
5	84967	Bolt,M6X47.5mm	4
6	370852	Oil Pickup Tube	1
7	84969	Gskt,Pu Tube	1
8	84970	Bolt,M8X20.0mm	2
9	84971	Nut,M10	1
10	370853	Oil Pan Assy	1
11	84889	Gasket,Oil Pan	1
12	370854	Oil Plug	1
13	84981	Bolt,M5X20.0M	2
14	84973	Bolt,M6X27.5mm	16
15	84974	Bolt,M6X52.5mm	2
16	84975	Oil Pan Spacer	-
16	84976	Oil Pan Spacer	-
16	84977	Oil Pan Spacer	-
17	84978	Oil Pmp Sprkt	1
18	84979	Bolt,M10X40.0mm	1
19	74561	Washer	1

Fig. 7 - Crankshaft Group

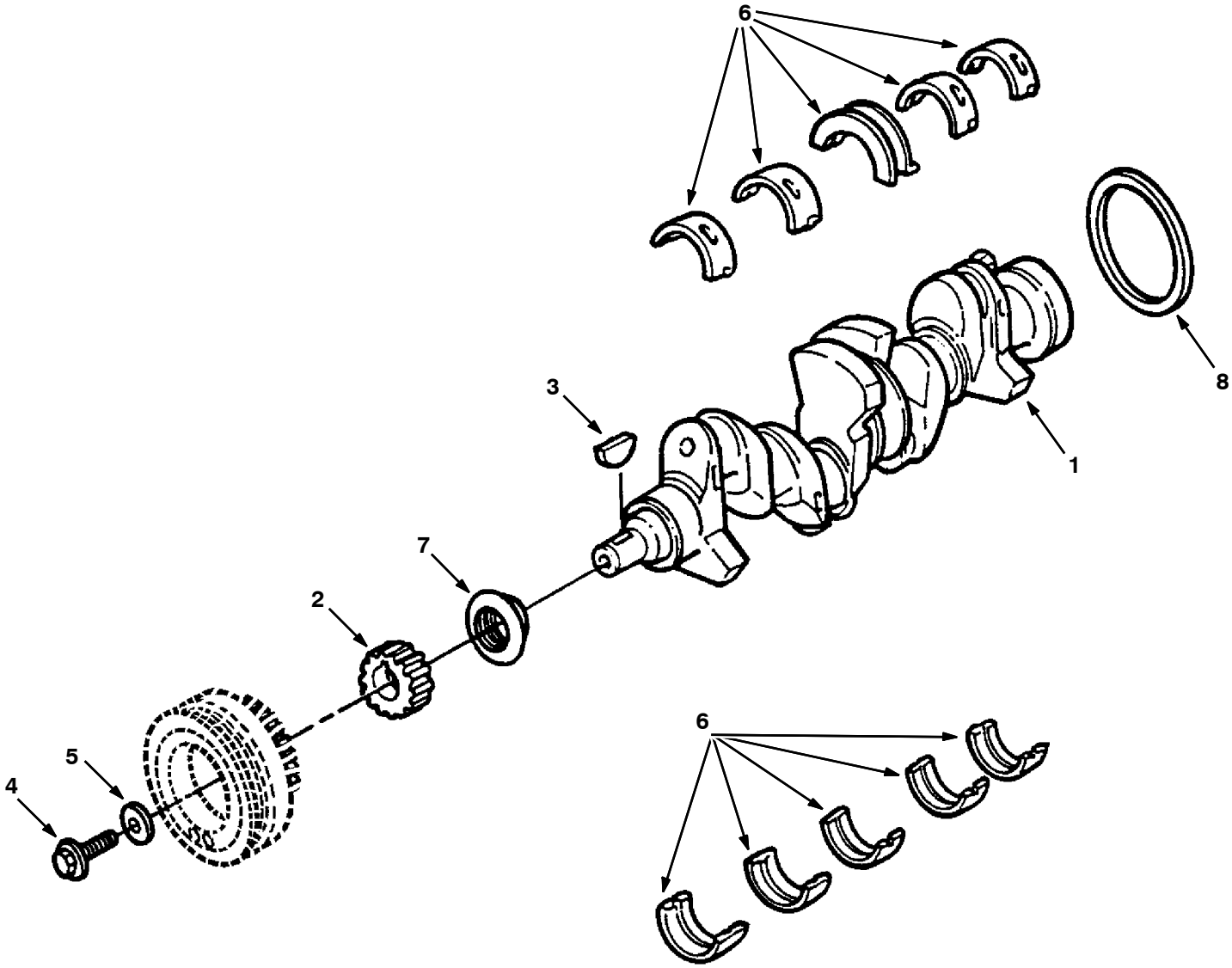

10526 - 800L, 8410, G, LP

Fig. 7 - Crankshaft Group

Ref.	Part No.	Description	Qty.
1	370855	Crankshaft Asy	1
2	84924	Crnksft Sprckt	1
3	84925	Crnkshaft Key	1
4	84926	Bolt,M14X55.0M	1
5	84927	Wash M15 1.53Od	1
6	1051175	Bearing Kit, Cshft, Std[F2.3/2.5l]	4
6	1051167	Bearing Kit, Cshft, .040[F2.3/2.5l]	-
6	1051174	Bearing Kit, Cshft, .010[F2.3/2.5l]	-
6	1051173	Bearing Kit, Cshft, .020[F2.3/2.5l]	-
6	1051172	Bearing Kit, Cshft, .030[F2.3/2.5l]	-
7	60833	Oil Seal, Front	1
8	60834	Crnksft Seal- Rear	1

Fig. 8 - Manifolds Group

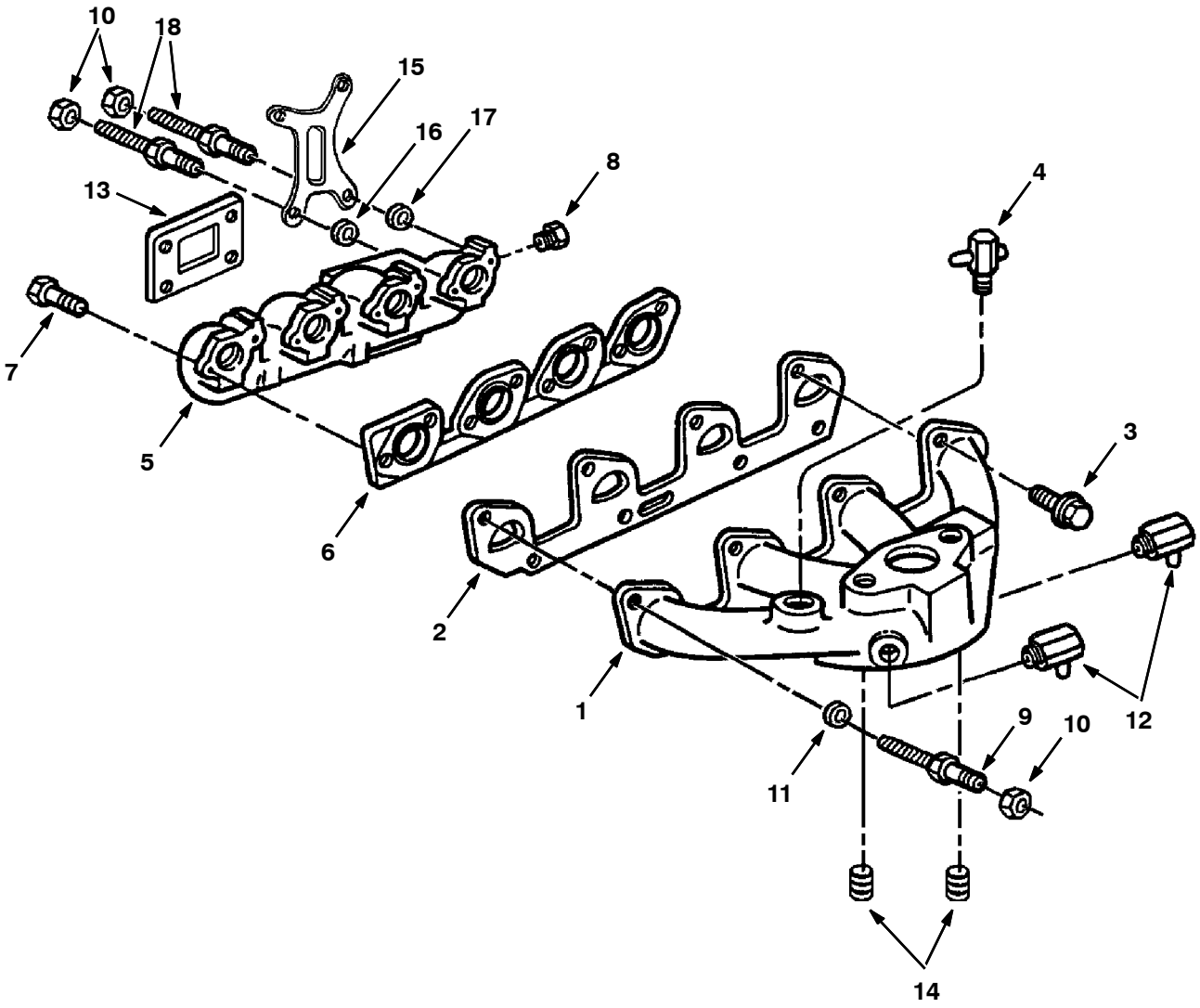

10529 - 800L, 8410, G, LP

Fig. 8 - Manifolds Group

Ref.	Part No.	Description	Qty.
1	84990	Int.Manifold	1
2	84991	Gskt,Int.Mnfld	1
3	84992	Bolt,M8X25.0mm	7
4	74527	Vac.Fitting	1
5	74509	Exh.Manifold	1
6	84995	Gskt,Exh.Mnfld	1
7	84996	Bolt,M10X55.0M	6
8	84997	Plug, 1/2Npt	1
9	79972	Stud	1
10	79973	Nut M8- 1.25	3
11	79974	Spacer	1
12	84985	Elbow,90 deg	2
13	36048	Gasket, Exh. Flange	1
14	73917	Plug 3/8 NPT	2
15	79976	Lifting Eye	1
16	21792	Spacer	1
17	21793	Spacer	1
18	21794	Stud	2

Fig. 9 - Flywheel Group

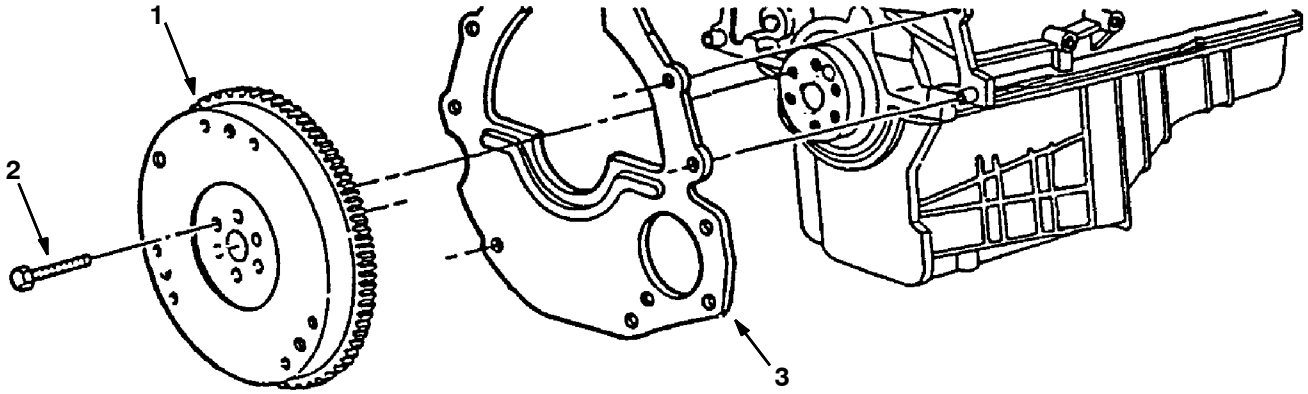

10527 - 800L, 8410, G, LP

Fig. 9 - Flywheel Group

	Ref.	Part No.	Description	Qty.
∇	1	370102	Flywheel	1
▲		84659	Gear, Ring [Fd]	1
	2	64038	Bolt,M10X58.0mm	6
	3	83669	Rear Plate	1

Fig. 10 - Camshaft And Sprocket Group

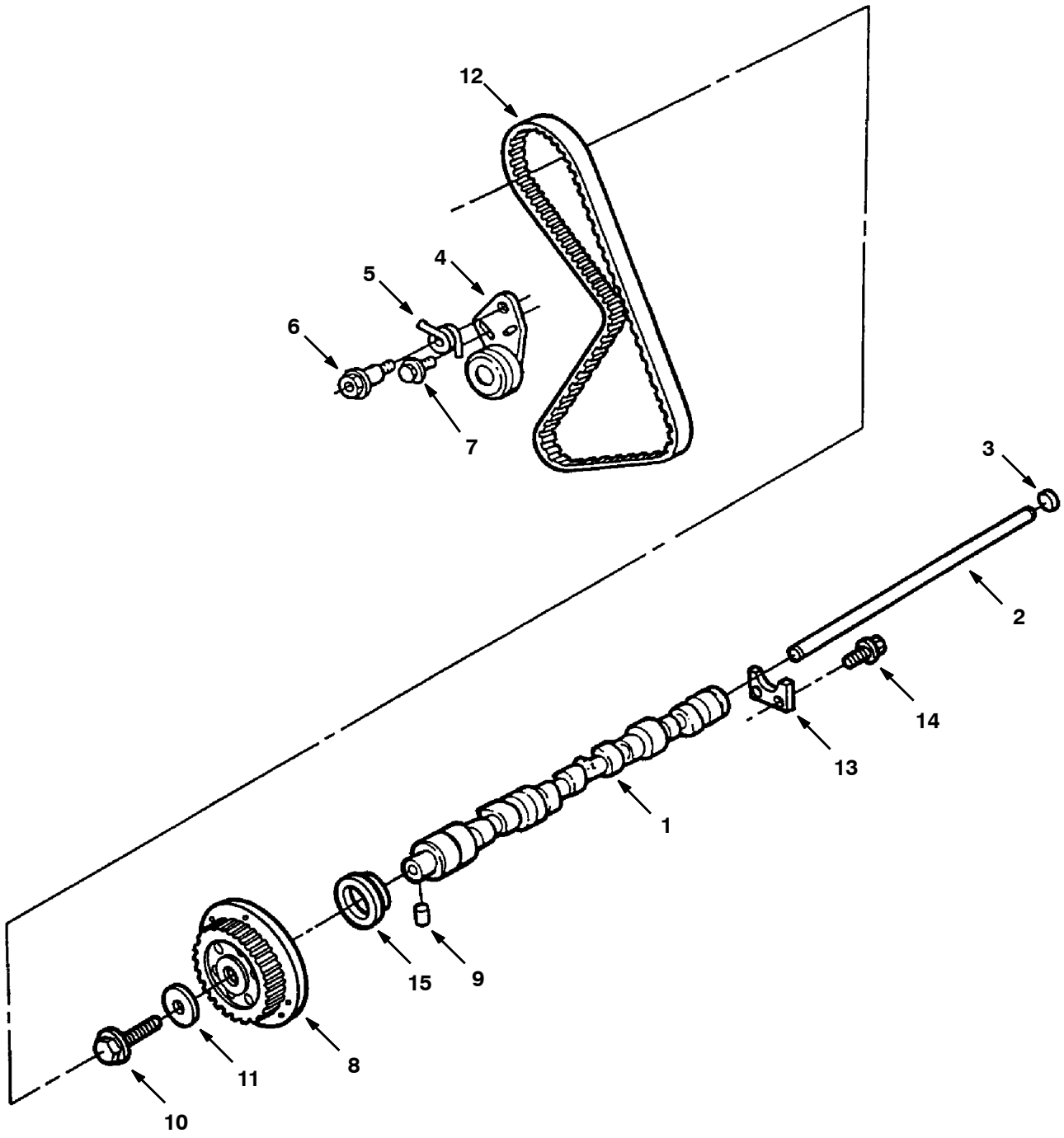

10520 - 800L, 8410, G, LP

Fig. 10 - Camshaft And Sprocket Group

Ref.	Part No.	Description	Qty.
1	84915	Camshaft	1
2	84916	Rod	1
3	84917	Plug	1
4	73967	Tensioner, Arm	1
5	73970	Spring, Tension	1
6	84919	Bolt,Tens.Sprn	1
7	74552	Bolt	1
8	84978	Camshft Sprckt	1
9	84921	Pin, 1/4X.32	1
10	74545	Bolt M12X45	1
11	73937	Washer	1
12	84936	Timing Belt	1
13	73954	Plate	1
14	74548	Scr&Wash M6	2
15	60833	Oil Seal, Front	1

Fig. 11 - Valve And Rocker Arm Cover Group

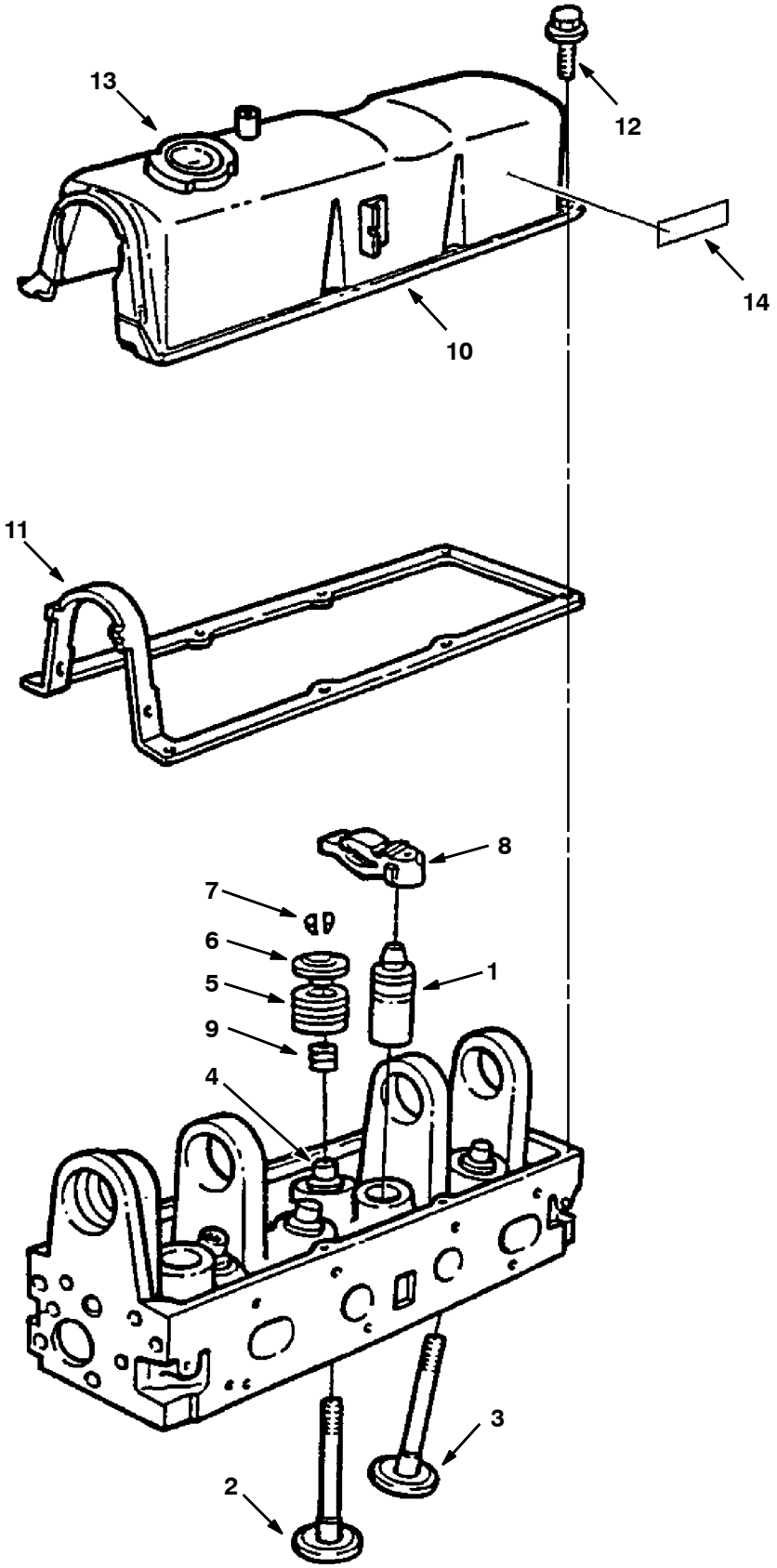

10521 - 800L, 8410, G, LP

Fig. 11 - Valves And Rocker Arm Cover Group

Ref.	Part No.	Description	Qty.
1	84950	Tap.Assy- Valve	8
2	84951	Std.Exh.Valve	4
3	84952	Std.Int.Valve	4
4	84953	Valve Guide Bushing	-
5	84954	Valve Spring	8
6	84955	Valve Spring Retainer	8
7	84956	Valve Spring Key	16
8	84957	Valve Rocker Arm	8
9	84958	Valve Stem Seal	8
10	370876	Valve Rocker Arm Cover	1
11	73995	Gasket,Rocker Cover	1
12	84961	Scr&Wsh,M6X15.0M	8
13	60836	Breather Cap	1
14	36164	Warning Label, Starter	1

Fig. 12 - Piston And Connecting Rod Group

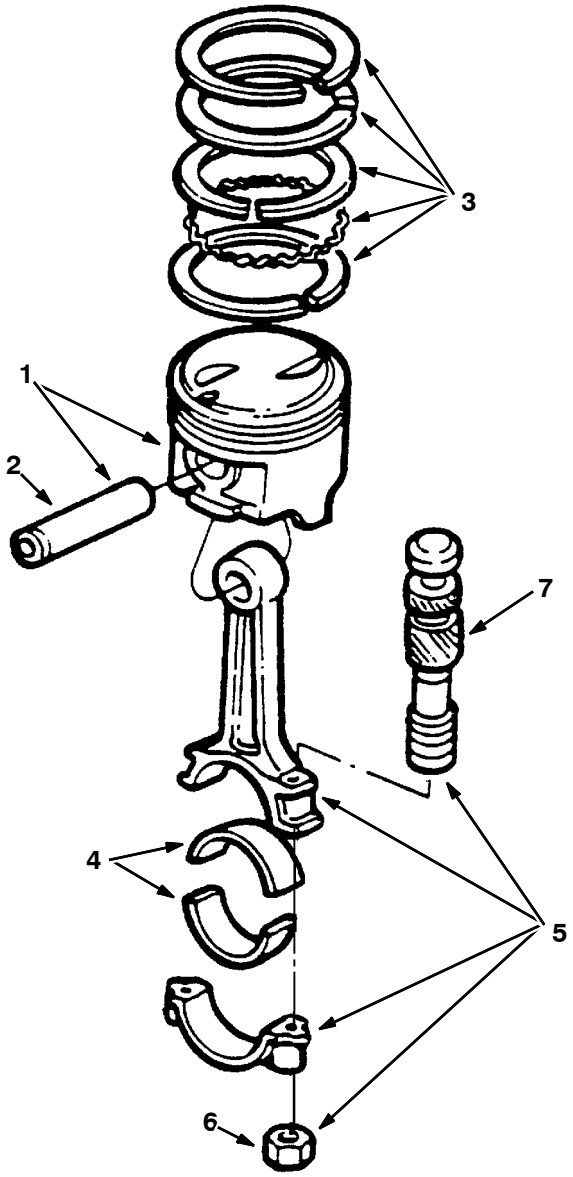

10447 - 800L, 8410, G, LP

	Ref.	Part No.	Description	Qty.
	1	370888	Piston, Std.	4
	2	370889	Piston Pin	4
	3	370890	Ring Set,Std.	2
	4	370891	Bearing	8
∇	5	370892	Connecting Rd	4
▲	6	60813	Nut, Conrod- 8	8
▲	7	60814	Bolt- Conrod- 4	8

Fig. 13 - Water Pump, Thermostat and Fan Group

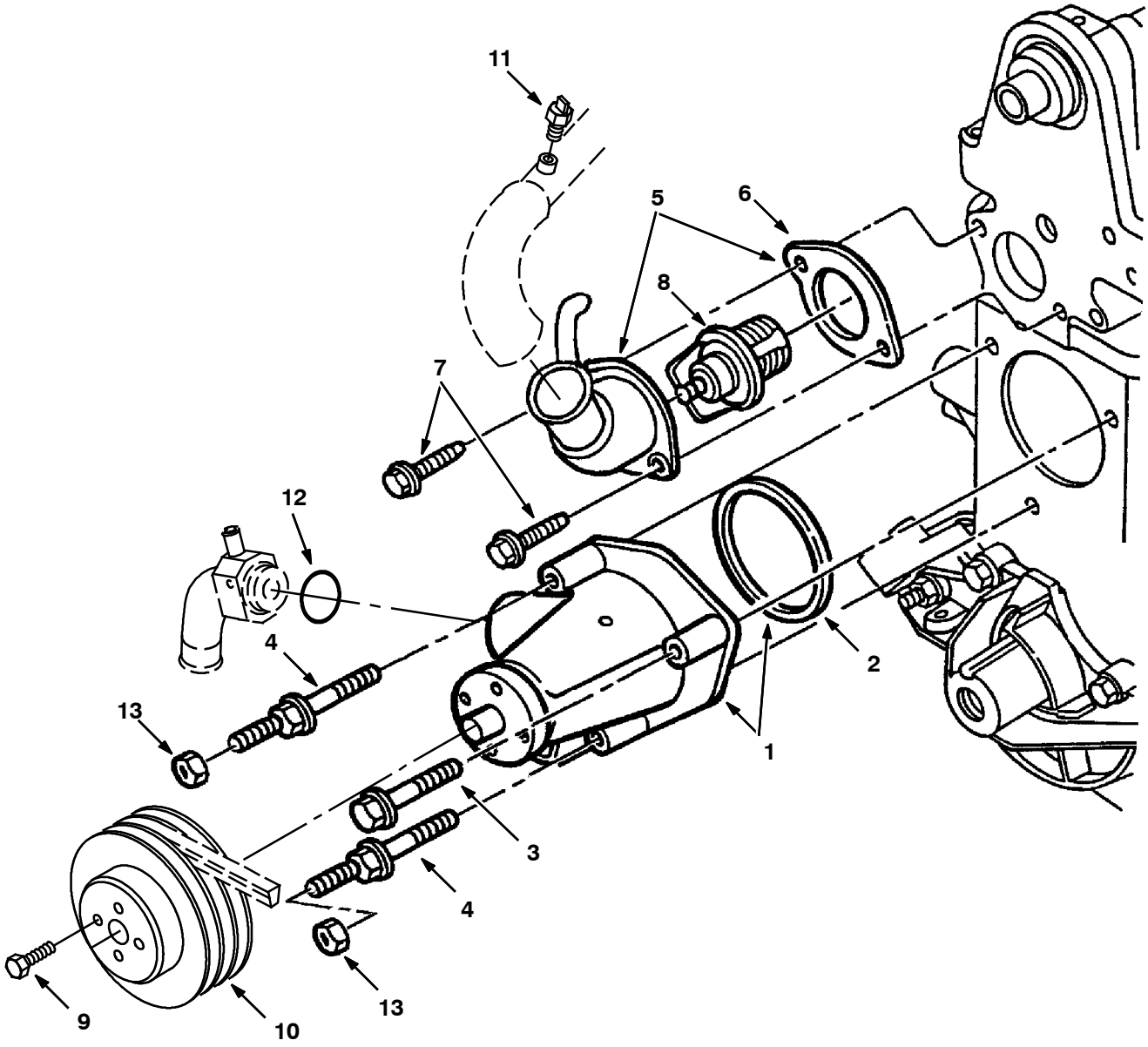

10528 - 800L, 8410, G, LP

	Ref.	Part No.	Description	Qty.
∇	1	84982	Water Pump	1
▲	2	84983	Gskt,Water Pump	1
	3	84984	Bolt,M8X53.0mm	1
	4	84998	Stud	2
∇	5	73996	Water Outlet	1
▲	6	74538	Gasket Water Outlet Connection	1
	7	84988	Bolt,M8X18.0M	2
	8	84987	Therm 190 W/Gsk	1
	9	84994	Bolt, M8X12.0mm	1
	10	36014	Sheave, Water Pump	1
	11	84989	Temperature sensor	1
	12	79975	O- Ring, Water Pump Adaptor	1
	13	84993	Locknut	2

Fig. 14 - Ignition Group

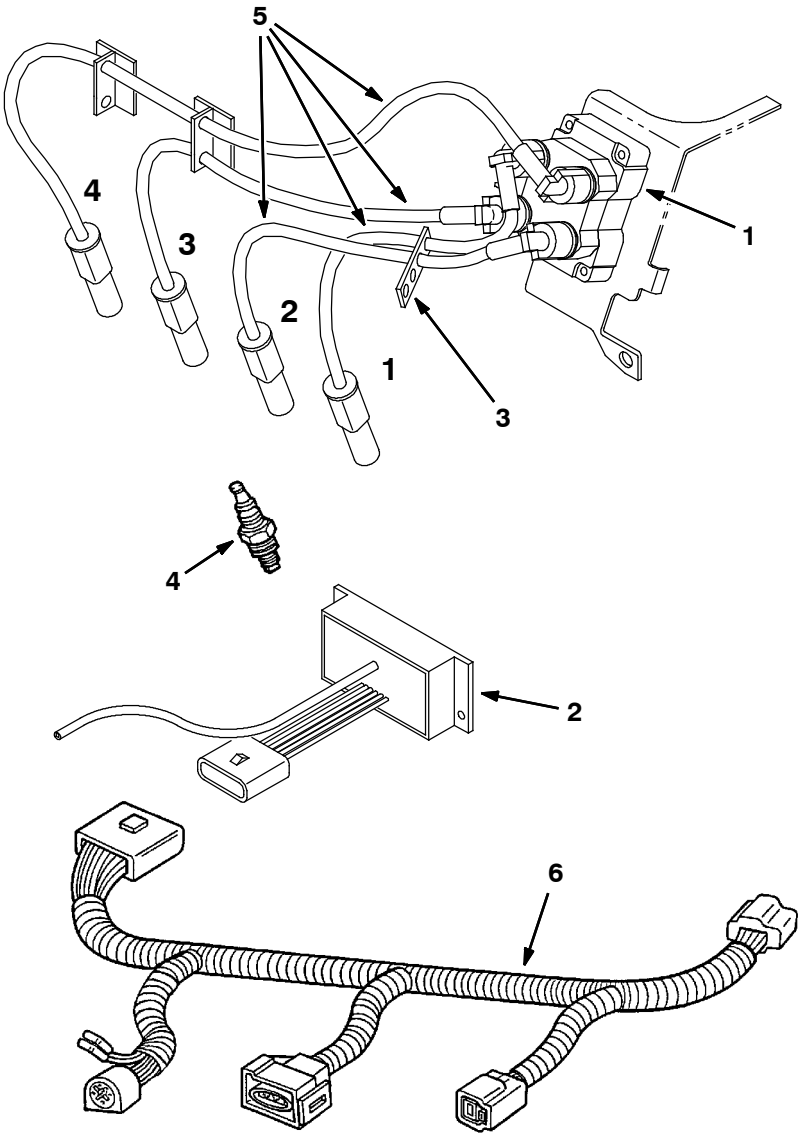

10524- 350562 - 800L, 8410, G, LP

Ref.	Part No.	Description	Qty.
1	83732	Ignition Coil	1
2	374274	Ignition Module Kit	1
3	84882	Separator	1
4	60846	Spark Plug	4
5	83677	Wire Asy,Spark Plug	1
6	370875	Harness, Wire, Eng	1

SECTION 7

Contents **Page**

Fig. 1 - Cylinder Head, Valves Group 7-2
Fig. 2 - Distributor and Ignition Group 7-4
Fig. 3 - Engine Block and Piston Group 7-6
Fig. 4 - Oil Pump and Oil Pan Group 7-8
Fig. 5 - Crankshaft Group 7-10
Fig. 6 - Camshaft and Water Pump Group 7-12

Fig. 1 - Cylinder Head, Valves Group

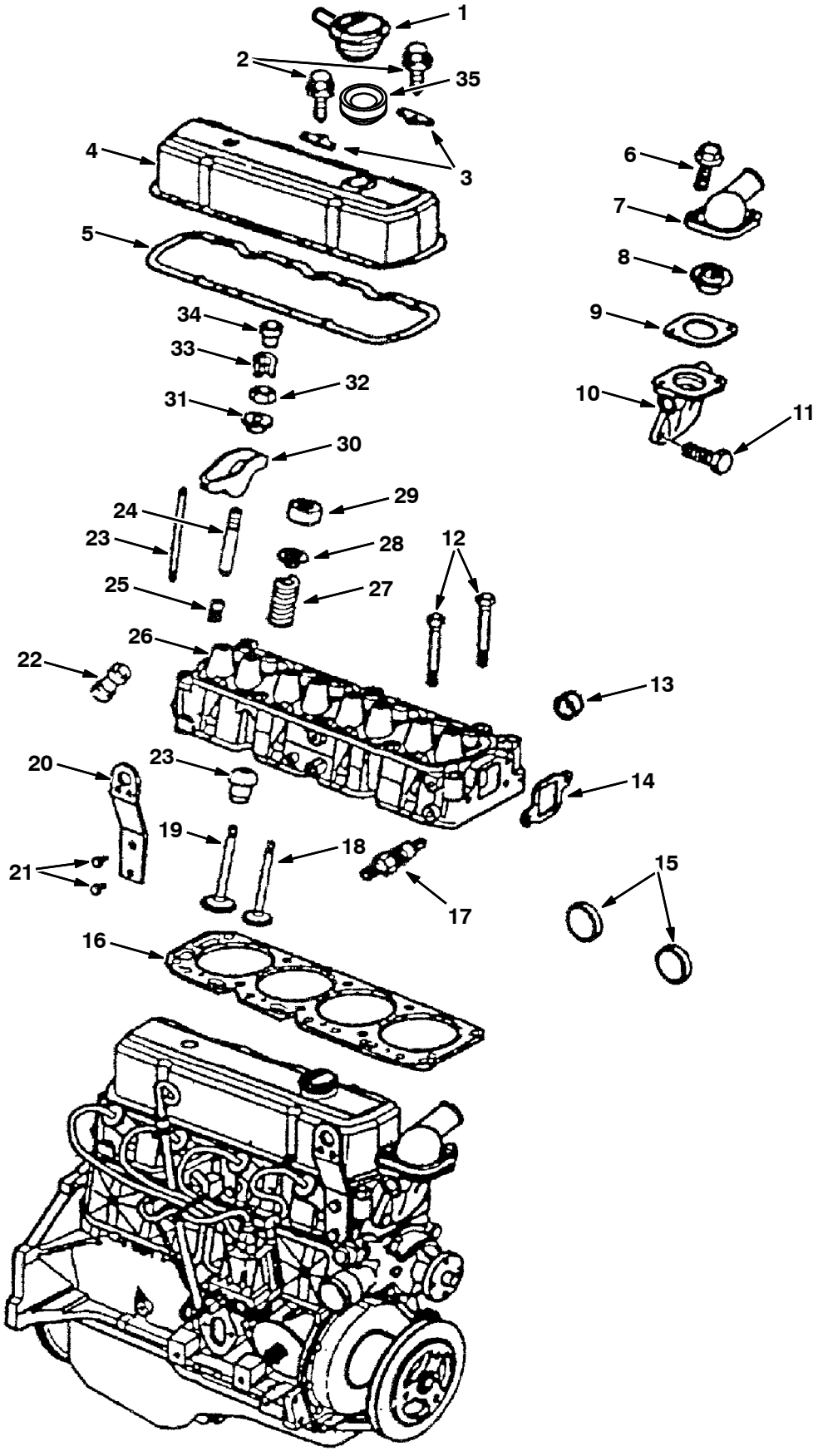

G, LP

Fig. 1 - Cylinder Head, Valves Group

Ref.	Part No.		Description	Qty.
1	393894		Cap, Oil Filler	1
2	393824		Bolt	-
3	393895		Reinforcement	-
4	393896		Cover	1
5	393897		Gasket	-
6	393898		Bolt	3
7	393899		Outlet For engine serial numbers (004937- 006999)	1
8	393900		Thermostat	1
9	393901		Gasket	1
10	393902		Housing	1
11	393898		Bolt	3
12	393903		Bolt	-
13	393904		Plug	2
14	393917		Gasket	1
15	393918		Plug	-
16	393933		Gasket	1
17	393934	[1]	Sparkplug [Gm 3.0]	4
17	9006586	[2]	Sparkplug [Gm 3.0]	4
18	393935		Valve, Exhaust	4
19	393936		Valve, Intake	4
20	393937		Bracket	1
21	393938		Bolt	8
22	393951		Lifter	8
23	393952		Rod	8
24	393953		Stud, .003” O.S.	8
24	393954		Stud, .013” O.S.	8
25	393955		Sealer	8
26	393956		Head	1
27	393957		Spring	8
28	393958		Cap, Valve Spring	8
29	393959		Shield	12
30	393960		Arm Kit	8
31	393961		Ball	8
32	393962		Nut	8
33	393963		Key	16
34	393964		Rotator	4
35	393993		Grommet, Breather, Oil	1

[1] Machine Serial number (004937- 006999)

[2] Machine Serial number (007000-)

Fig. 2 - Distributor and Ignition Group

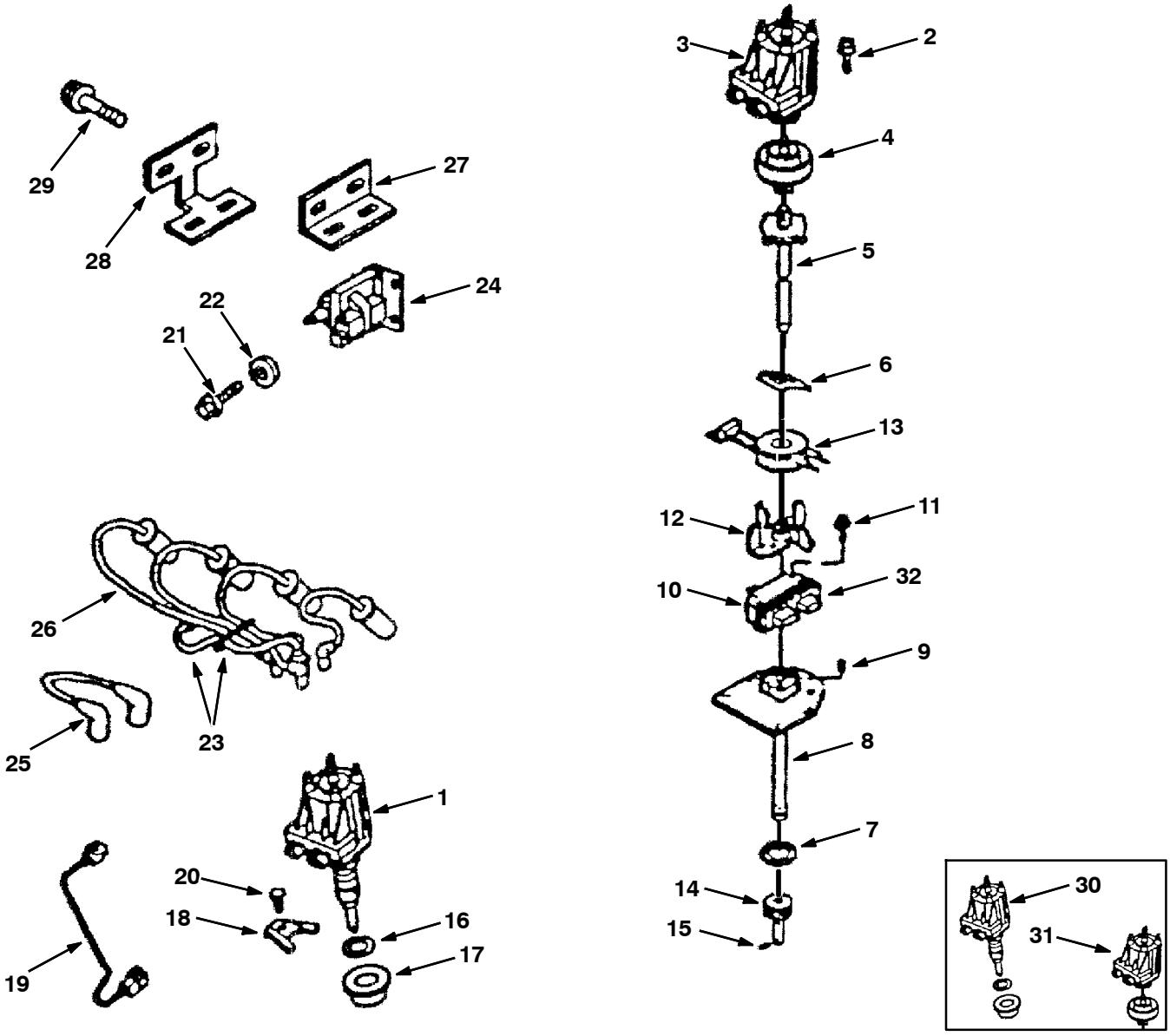

G, LP

Fig. 2 - Distributor and Ignition Group

	Ref.	Part No.		Description	Qty.
▽	1	9006584	[2]	Distributor	1
▲	2	393919		Bolt	2
▲	3	9006585	[2]	Cap, Distributor	1
▲	4	393921		Rotor	1
▲	5	393922		Shaft	1
▲	6	393923		Retainer	1
▲	7	393924		Sealer	1
▲	8	393925		Housing	1
▲	9	393926		Pin	1
▲	10	393927	[1]	Module, Distributor	1
▲	11	393928		Bolt	2
▲	12	393929		Pole Piece	1
▲	13	393930		Coil	1
▲	14	393931		Gear	1
▲	15	393932		Pin	1
	16	393940		Gasket	1
	17	393941		Washer	1
	18	393942		Clamp	1
	19	393943		Wire	1
	20	393898		Bolt	3
	21	393945		Bolt, (HFH3/8- 16x062 280 POR)	2
	22	393946		Washer	2
	23	393947		Retainer	-
	24	393948	[1]	Coil	1
	24	9006587	[2]	Coil	1
	25	393949	[1]	Wire	1
	25	9006588	[2]	Wire, Coil	1
	26	393950	[1]	Spark Plug Wires (Straight Boots)	1
	26	9006583	[2]	Wire Set, Sparkplug (90 Degree Boots)	1
	27	393965		Bracket, Top	1
	28	393966		Bracket, Bottom	1
	29	393967		Bolt	-
	30	393939	[1]	Distributor	1
	31	393920	[1]	Cap, Distributor	1
	32	9014941	[2]	Sensor, Distributor [Gm3.0L]	1

[1] Machine Serial number (004937- 006999)

[2] Machine Serial number (007000-)

Fig. 3 - Engine Block and Piston Group

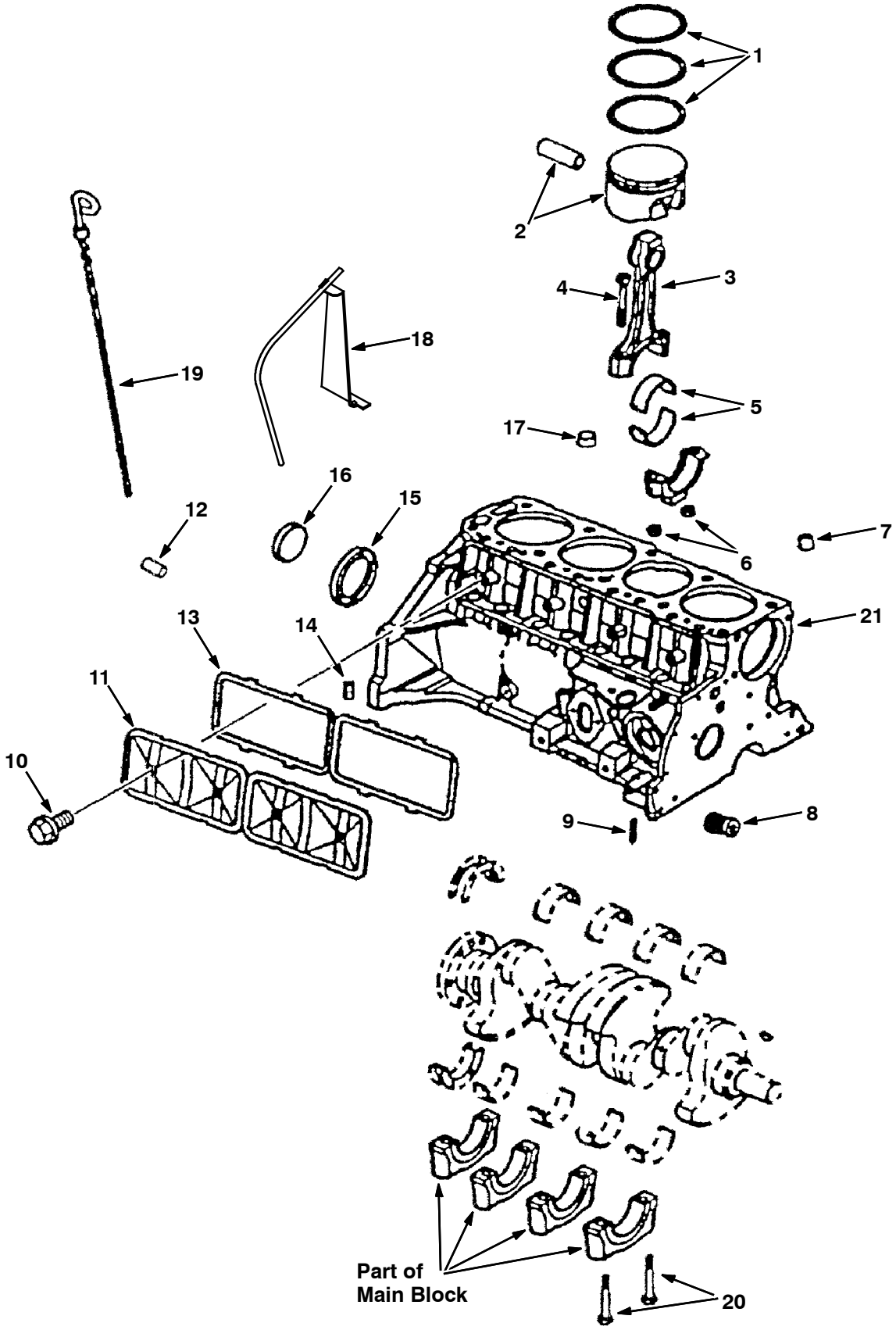

Fig. 3 - Engine Block and Piston Group

Ref.	Part No.	Description	Qty.
1	393806	Ring Kit, Std	4
1	393807	Ring Kit, .030” O.S.	4
2	393808	Piston, STD	4
2	393809	Piston, Hi- limit	4
2	393810	Piston, .020” O.S.	4
3	393811	Conn Rod	4
4	393812	Bolt	8
5	393813	Bearing Kit, Std	4
5	393814	Bearing Kit, .001 U.S.	4
6	393815	Nut, Conn Rod	8
7	393816	Bearing Kit	1
8	393832	Valve	1
9	393833	Pin	8
10	393882	Bolt	4
11	393883	Cover	1
12	393884	Pin	2
13	393662	Sealant, [Rtv], 03.35oz	-
13	393663	Sealant, [Rtv], 05.00oz	-
14	393886	Plug	1
15	393888	Plug	1
16	393889	Plug	-
17	393890	Plug	1
18	372464	Tube, Ds	1
19	372251	Dipstick	1
20	393872	Bolt	10
21	393887	Engine, Partial (Includes block, pistons, rods, crankshaft, bearings, rear seal gasket)	1

Fig. 4 - Oil Pump and Oil Pan Group

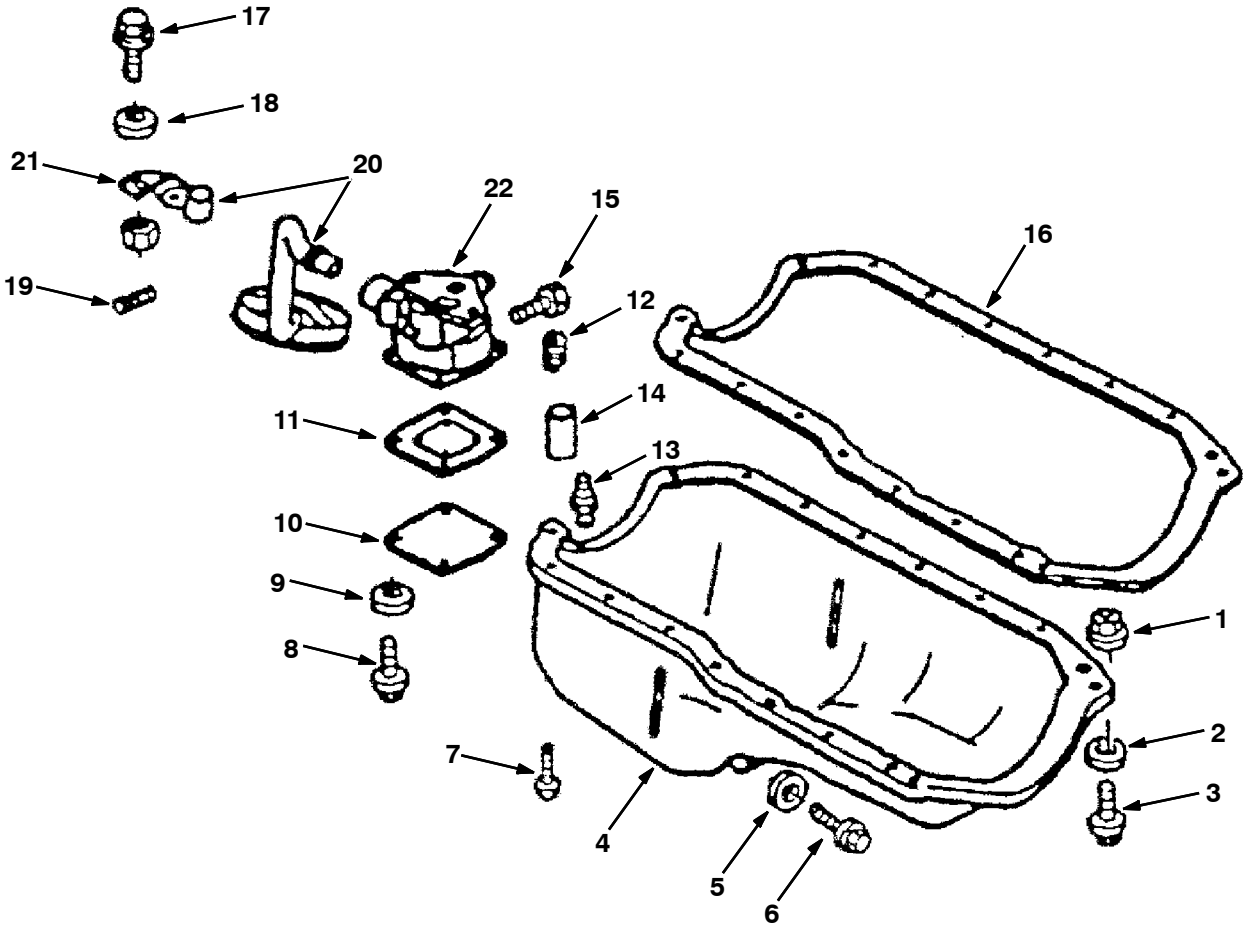

G, LP

Fig. 4 - Oil Pump and Oil Pan Group

	Ref.	Part No.	Description	Qty.
	1	393848	Nut	-
	2	393849	Washer	-
	3	393850	Bolt	-
▽	4	393853	Oil Pan	1
▲	5	393852	Gasket	1
▲	6	393851	Plug	1
	7	393824	Bolt (1/4- 20x1/2)	2
	7	393850	Bolt (1/4- 20x.62)	2
	7	393854	Bolt (5/16- 18x5/8)	12
	8	393855	Screw	4
	9	393849	Washer	4
	10	393856	Cover	1
	11	393857	Gasket	1
	12	393858	Spring	1
	13	393859	Plug	1
	14	393860	Valve	1
	15	393861	Bolt	3
	16	393862	Gasket	1
	17	393867	Bolt	-
	18	393868	Washer	-
	19	393869	Pin	1
	20	393871	Screen, w/Tube	1
▽	20	393870	Screen, w/Suction Pipe	1
▲	21	393865	Bracket	1
	22	393863	Pump	1

Fig. 5 - Crankshaft Group

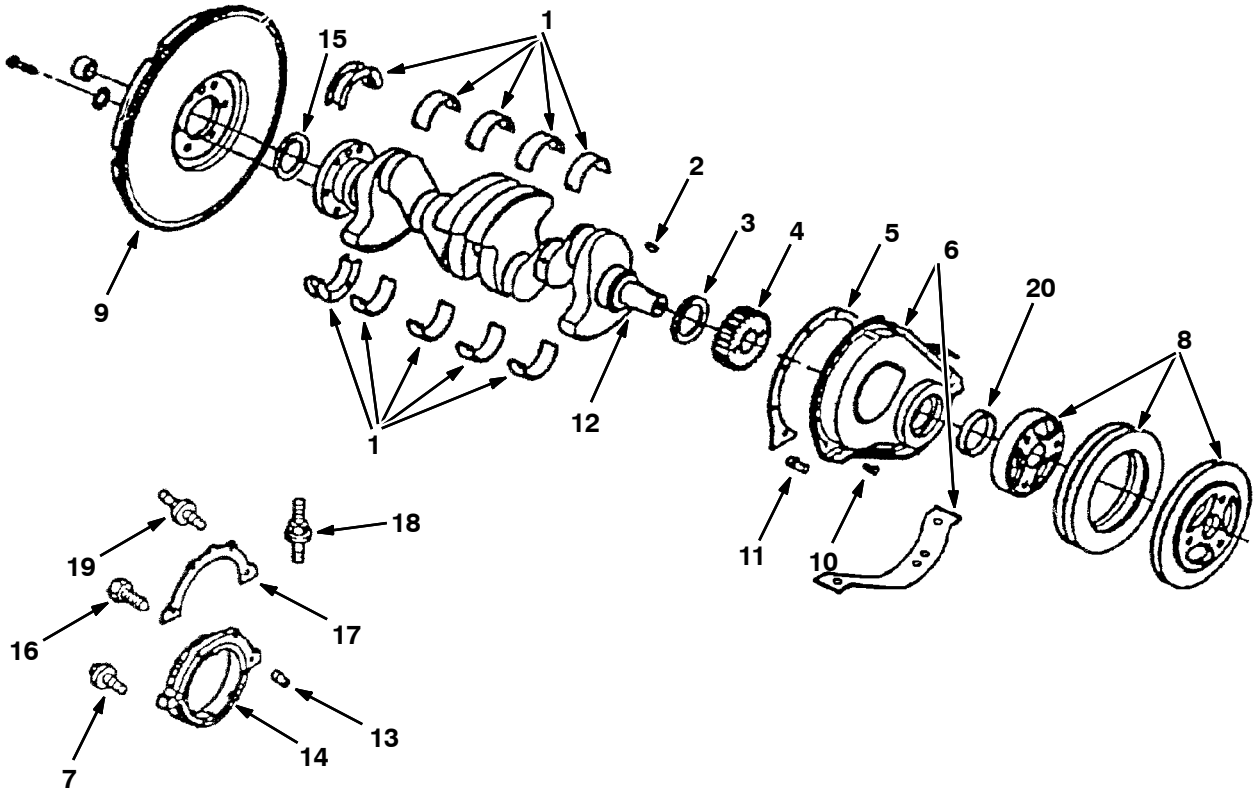

G, LP

Fig. 5 - Crankshaft Group

Ref.	Part No.	Description	Qty.
1	393837	Bearing Kit, Std #1, 2, 3, 4	4
1	393838	Bearing Kit, .001” #1, 2, 3, 4	4
1	393839	Bearing Kit, .010” #1, 2, 3, 4	1
1	393840	Bearing Kit, .020” #1, 2, 3, 4	1
1	393841	Bearing Kit, .030” #1, 2, 3, 4	1
1	393836	Bearing Kit, Std #5	4
1	393834	Bearing Kit, .001” #5	4
1	393835	Bearing Kit, .025” #5	4
2	393826	Key	1
3	393842	Seal	1
4	393843	Gear	1
5	393844	Gasket	1
6	393845	Cover	1
7	393875	Bolt	-
8	393846	Balancer	1
9	393881	Gear	1
10	393824	Bolt	8
11	393864	Nozzle	1
12	393866	Crankshaft	1
13	393873	Pin	1
14	393874	Housing	1
15	393880	Seal	1
16	393876	Bolt	-
17	393877	Gasket	1
18	393878	Stud	1
19	393879	Stud	2
20	9009657	Seal, Pulley, Shaft	1

Fig. 6 - Camshaft and Water Pump Group

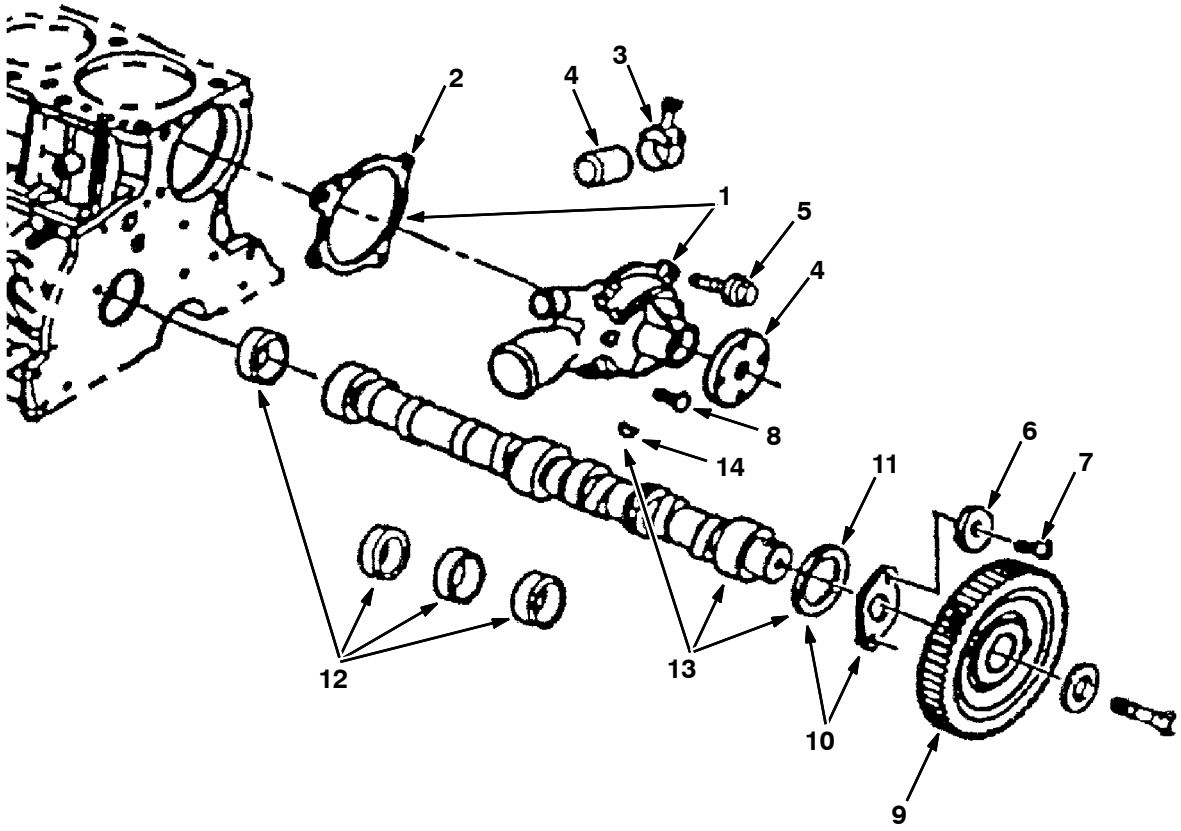

G, LP

	Ref.	Part No.	Description	Qty.
▽	1	393820	Water Pump	1
▲	2	393817	Gasket	1
	4	393818	Cap	1
	3	393819	Clamp	1
	5	393821	Bolt	1
	6	393822	Washer	1
	7	393823	Bolt (1/4- 20x1/12 Hex)	1
	7	393824	Bolt (1/4- 20x1/12)	3
	8	393825	Bolt (5/16- 18x1.5 Hex)	2
	9	393827	Gear	1
▽	10	393828	Plate Kit	1
▲	11	393829	Ring	3
	12	393830	Bearing Kit	1
▽	13	393831	Camshaft	2
▲	14	393826	Key	1

SECTION 8

CONTENTS **PAGE**

PART NUMBER TO PAGE NUMBER CROSS REFERENCE LIST 8-2
PART DESCRIPTION TO PAGE NUMBER CROSS REFERENCE LIST 8-20

PART NUMBER TO PAGE NUMBER CROSS REFERENCE LIST

Part Number	Page Number
MM337	3-114
00500-15	4-32
00954	4-34
00960	2-135, 2-137, 2-139, 4-35
01274	2-33
01685	2-29, 2-59, 3-57, 3-59
01686	2-37
01691	3-57, 3-59
01706	2-109
01987	2-159, 2-161
01999	3-49
02247	2-75, 2-135, 2-137, 2-139
02506-6	3-104
02549	2-159
02712	2-187
02850	3-31
02892	2-191
02931	2-179
02938	3-109
03026	2-91, 2-93, 2-95, 2-97, 2-99, 2-101
03192	2-17, 2-19, 2-50, 2-107
03193	2-33, 2-176, 3-42, 3-57, 3-59
03922	2-185
04375	3-75, 3-79, 3-95
04414	2-13, 2-43, 2-45, 2-47
04483	4-44
04706	2-189
04761	2-173, 3-47
04843	2-33, 3-97, 3-99
05611	2-187
05880	2-103, 2-105
05881	2-103, 2-105
06121	2-7
06146	2-167
06474A	2-169
06524	2-21
06535	2-173, 3-47
06537	2-173, 3-47, 3-75
06548	2-175, 3-41, 3-45
06549	3-3, 3-5, 3-7, 3-9, 3-11, 3-13, 3-15, 3-17, 3-19, 3-21, 3-23, 3-25
06921	2-191
06927	3-31
06928	2-191
06932	2-191, 3-109
06933	4-49, 4-51
06941	2-133
06942	2-19, 2-73, 2-123, 2-125, 2-187, 2-191, 2-192
06943	2-13, 2-15, 2-19, 2-23, 2-137, 2-139, 2-151, 2-153, 2-167, 2-175, 2-185, 2-189, 2-192, 3-19, 3-21, 3-23, 3-25, 3-27, 3-29, 3-55
06944	2-9, 2-11, 2-13, 2-17, 2-19, 2-95, 2-99, 2-133, 2-171, 3-45
06946	2-9, 2-11, 2-141
06948	2-67
06949	2-97, 2-101, 2-117
06952	2-187
06955	2-15
06957	2-176, 2-179, 3-42
06961	2-17, 4-49, 4-51
06962	2-107, 2-109
06963	2-143
06965	2-176, 3-42
06966	3-79
06968	2-50, 2-179
06969	2-17, 2-143, 2-153
06972	2-13, 2-29, 2-45, 2-47, 2-49
06973	2-31, 2-49
06993	2-145
06995	2-145
07274	3-93
07449	2-153
07514	2-179
07562	2-91, 2-93, 2-95, 2-99
07592	2-53, 2-55, 2-57
07783	2-145
07787	2-173, 3-47
07789	2-73
07790	2-17, 2-19, 2-23, 2-123, 2-125, 2-135, 2-137, 2-139, 2-151, 2-153, 2-167, 2-171, 2-192, 3-45, 3-55
07791	2-13, 2-17, 2-19, 2-29, 2-45, 2-47, 2-49, 2-55, 2-57, 2-97, 2-101, 2-123, 2-125, 2-141, 2-175, 3-3, 3-5, 3-11, 3-13, 3-41, 3-93
07792	2-9, 2-11, 2-173, 2-176, 2-179, 3-41, 3-47, 3-57, 3-59, 3-75
07793	2-19, 2-143, 2-179
07805	2-153
07819	3-75
07934	2-155
08085	2-153, 2-169
08165	2-139
08166	2-107, 2-109
08179	2-175
08180	2-147
08182	2-31
08346	2-153
08708	2-9, 2-11, 2-15, 2-19, 2-21, 2-23, 2-33, 2-37, 2-95, 2-99, 2-133, 2-139, 2-141, 2-175, 2-185, 2-187, 2-189, 2-192, 3-41, 3-45
08709	2-15, 2-29, 2-97, 2-101, 2-123, 2-125, 2-135, 2-137, 2-139, 2-151, 2-173, 2-176, 2-179, 2-185, 2-187, 3-3, 3-5, 3-7, 3-9, 3-11, 3-13, 3-15, 3-17, 3-42, 3-47, 3-51, 3-53, 3-75, 3-79, 3-95
08711	2-13, 2-45, 2-47, 2-49
08712	2-153, 4-47
08713	2-29, 2-31
08714	2-175, 3-41, 3-75, 3-79
09010	2-176, 3-41
09011	2-29
09028	2-37, 3-7, 3-9, 3-15, 3-17
09081	2-173, 3-47
09120	2-179
09145	2-139
09164	2-37
09206	2-187, 3-27, 3-29
09244	3-3, 3-5, 3-7, 3-9, 3-11, 3-13, 3-15, 3-17, 3-19, 3-21, 3-23, 3-25
09258	2-21, 2-23
09291	2-173, 3-47
09570	2-115
09718	2-145
09740	2-29
09770	2-173, 3-47
09806	2-240
1007162	2-53, 2-55
1007343	3-75
1008094	2-53, 2-55, 2-57, 3-93
1008510	3-75

Part Number	Page Number
1008512	3-75
1008513	2-55, 3-75, 3-93
1008519	3-75, 3-93
1008538	2-57, 3-75, 3-93
1008988	2-115
1011011	2-225
1011015	2-226
1011017	2-226
1011216	2-107, 2-109
1011259	2-107
1011655	2-141
1011702	2-99, 2-101
1011780	2-95, 2-97, 2-99, 2-101
1011788	2-143
1011795	2-143
1011895	2-115, 2-117
1011899	2-95, 2-97, 2-99, 2-101
1011941	2-115
1011942	2-115
1011943	2-115
1011944	2-107
1011959	2-107
1012012	2-107
1012018	2-115
1012033	2-237
1012110	2-115
1012185	2-191
1012248	2-115
1012250	2-115
1012469	2-115
1012634	3-113
1012656	2-181
1012657	2-181
1012670	2-191
1012677	2-115
1012737	2-131
1012754	2-97, 2-101
1012785	2-143
1012990	2-107
1012999	2-107
1013030	2-115
1013031	2-107, 2-109
1013086	2-115
1013113	2-107
1013116	2-107
1013117	2-107
1013344	2-97, 2-101
1013350	2-65
1013366	2-97, 2-101
1013509	2-117
1013588	2-107
1014411	2-45, 2-47, 2-49
1014456	2-19
1014491	2-169
1014595	2-115
1015182	3-55
1015184	3-55
1015224	3-55
1016556	3-73, 3-89
1016560	3-73, 3-89
1016561	3-73, 3-89
1017080	2-75
1017085	3-75
1017102	3-75
1017218	2-153
1017239	2-75
1017270	4-71, 4-73
1017272	2-75
1017292	3-75
1017476	2-75
1017477	2-75
1017500	2-75
1017515	3-75
1017598	2-75
1017662	2-75
1017898	2-171, 3-45
1018573	2-47, 2-50
1019188	2-135, 2-137
1019513	2-55, 3-75, 3-93
1019939	2-117
1020982	2-153
1021797	3-73
1021799	3-73
1021937	3-61
1021951	3-61
1021966	3-61
1021968	3-61
1021969	3-61
1023853	2-137, 2-139
1026719	2-27, 4-45
1028300	2-7
1028492	2-145
1028558	2-109
1028559	2-109
1028835	2-109
1028836	2-109
1028924	2-117
1029293	2-117
1029295	2-117
1029334	2-50
1029375	2-49
1029502	2-117
1029649	2-57
1029737	2-133
1029996	2-109
1030122	2-109
1030134	2-109
1030189	2-133
1030272	2-50
1030485	2-117
1030501	2-109
1030502	2-109
1030533	2-109
1030582	3-79
1030593	4-47
1030601	4-49, 4-51
1030627	3-79, 3-95
1030635	2-57
1030654	3-79, 3-95
1030657	3-79
1030708	3-79, 3-95
1030762	3-79, 3-95
1031961	2-49
1032032	2-101
1032075	2-7
1032083	2-109
1032142	2-109
1032214	2-239
1032382	2-59
1032804	2-67
1032805	2-83
1032812	2-117
1032904	3-79, 3-95
1033344	2-139
1033497	2-139
1033746	2-117
1033897	2-117
1033899	2-117
1034105	2-49
1034676	2-117
1037311	2-83
1037312	2-83
1037313	2-83
1038176	2-181
1038293	2-109
1040835	2-61
1041034	2-175, 3-41
1041090	2-31
1041151	2-84
1041152	2-84
1041739AM	2-135, 2-137, 2-139
1042110	2-27
1042969	2-5
1043095	2-73
1043352	3-65, 3-73, 3-83, 3-89
1044235	2-41
1045764	2-135, 2-137, 2-139
1046389	2-23
1049209	2-167, 4-81
1049210	2-187, 3-45, 4-79
1049211	2-175, 3-41, 4-82
1050295	3-57, 3-59
1050584	3-79
1050610	3-79
1050775	2-13
1050780	4-79, 4-81
1050781	2-13
1050786	2-19
1050787	2-17
1050809	4-79, 4-81, 4-82
1050811	4-79
1050812	4-79, 4-81
1050861	4-81, 4-82
1050862	4-81
1050863	4-81
1050864	4-81
1050865	4-81

Part Number	Page Number
1050866	4-81
1050867	4-81
1050868	4-81
1050869	4-81
1050870	4-81, 4-82
1050871	4-81
1050872	4-82
1050873	4-82
1051078	4-82
1051079	4-82
1051167	5-13, 6-13
1051172	5-13, 6-13
1051173	5-13, 6-13
1051174	5-13, 6-13
1051175	5-13, 6-13
1051245	3-79
1051599	2-139
1052092	3-114
1053518	2-25
1053585	2-145
1055106	2-41
10552	4-71, 4-73, 4-75, 4-77
1055893	2-139
1056213	2-139
1057337	2-179
1057338	2-171, 3-45
1057434	4-47
1057643	2-179
1057707	2-4
1057708	2-4
1057710	2-4
1057711	2-4
1057885	4-49
1058254	4-49, 4-51
1058256	4-49, 4-51
1058257	4-49, 4-51
1058258	4-49, 4-51
1058259	4-47
1058309	4-49
1058996	2-189
1059997	4-47
1060000	4-47
1060286	2-109
1060653	2-67, 2-83, 2-87
1061447	4-49, 4-51
1061468	4-47
1061492	4-47
1061655	4-49, 4-51
1061949	3-57
1062083	4-47
1062084	4-47
1062092	4-47
1062119	4-47
1062143	4-49, 4-51
1062362	2-67
1062363	2-87
1062545	2-101
1062668	2-109
1062707	4-47
1062708	4-49, 4-51
10632-12	3-19, 3-21, 3-23, 3-25
10632-14	3-55, 4-47
10632-20	3-3, 3-5, 3-7, 3-9, 3-11, 3-13, 3-15, 3-17
10632-4	2-39, 3-3, 3-5, 3-11, 3-13, 3-19, 3-21, 3-23, 3-25, 3-27, 3-29, 3-109
10632-5	2-191, 3-31, 3-51, 3-53
10632-8	3-31
10632-9	3-19, 3-21, 3-23, 3-25
1063653	2-228
1063654	2-228
1064050	3-3, 3-5, 3-7, 3-9, 3-11, 3-13, 3-15, 3-17
1064125	2-149
1064126	2-149
1064170	2-161
1064184	2-192
1064188	2-192, 3-55, 3-109
1064191	2-192, 3-55
1064893	4-49, 4-51
1064894	4-49, 4-51
1064895	4-47
1064896	4-47
1065909	4-49, 4-51, 4-53
1065921	4-47
1065954	4-47
1066218	4-47
1066313	4-47
1066314	4-47
10664	2-165
1066763	3-7, 3-15
1067656	2-97, 2-101
1068383	3-55
1068804	4-47, 4-49, 4-51
1068905	2-145
1069298	4-47, 4-49, 4-51
1069305	4-47, 4-49, 4-51
1069309	4-47, 4-49, 4-51
1070055	4-53
1070125	3-3, 3-7, 3-11, 3-15
1071056	2-145
1071253	2-187
1071254	2-139
10723	5-3
10724	5-3, 6-3
1073030	2-143
1073034	2-143
1073553	2-143
1073601	2-161
1073602	2-161
1073603	2-161
1073666	4-53
1073737	4-51, 4-53
1073801	2-191
1073802	2-97, 2-101
1073804	2-19
1073805	2-7
1073807	2-7
1073811	2-19
1073812	2-151
1073814	2-7
1073815	2-17
1073816	2-19
1073817	2-9
1073818	2-11
1073819	2-13
1073820	2-33
1073821	2-33
1073822	2-23
1073823	2-192
1073824	2-15
1073825	2-7
1073827	2-17
1073831	2-13
1073832	2-33
1073833	2-169
1073834	2-169
1073835	2-169
1073836	2-7
1073837	2-19
1073838	2-7
1073839	2-7
1073840	2-7
1073841	2-31
1073842	2-35
1073843	2-35, 3-39
1073844	2-13
1073847	2-153
1073848	2-19
1073858	2-161
1073867	3-59
1073868	3-99
1073869	3-35
1073870	3-55
1073872	2-33
1073873	3-55
1073876	3-21, 3-25
1073877	3-35
1073878	3-39
1073879	3-39
1073889	3-47
1073894	3-5, 3-13
1073895	2-33
1073903	2-175
1073904	3-71, 4-61
1073905	3-87, 4-65
1073906	4-57
1073907	4-61, 4-65
1073908	3-55
1073909	3-5, 3-13
1073912	3-47
1073913	3-47

Part Number	Page Number
1073921	3-45
1073925	3-59
1073926	3-103
1073927	3-29, 3-53
1073928	3-45
1073929	3-39
1073930	4-47
1073931	4-51
1073932	3-59
1073933	3-9, 3-17
1073934	3-5, 3-9, 3-13, 3-17
1073938	3-47
1073939	2-29
1073940	2-29
1073946	3-37
1073947	3-37
1073948	3-103
1073949	3-103
1073950	3-39
1073959	2-33
1074280	2-13
1074286	2-173
1074287	2-173
1074288	2-171
1074289	2-173
1074290	2-173, 3-47
1074291	2-173
1074292	2-173
1074293	2-173
1074294	3-47
1074295	3-47
1074310	3-103
1074357	2-185
1074539	4-51
1074549	2-240
1074659	2-37
1074688	2-29
1074764	3-109
1074781	4-53
1075003	2-191
1075283	3-3, 3-5, 3-7, 3-9, 3-11, 3-13, 3-15, 3-17, 3-19, 3-21, 3-23, 3-25
10819	2-179
10830	2-67, 2-83, 2-87
10831	2-47, 2-49
10911	2-167
10959	2-25, 2-27
11329	2-189
11399	2-59, 2-63, 2-75, 3-73, 3-89
11442-1	2-89, 2-121, 2-123, 2-125
11442-23	2-119, 2-121, 2-125
11531	2-127, 2-129, 2-131, 2-133, 3-31
11676	3-97, 3-99
11716	2-183
11747	2-33, 3-109
11984	2-61
1212666	2-153
1214251	2-240
12271	2-19
12273	2-59, 2-153
12274	2-33, 2-179
12316	2-121, 2-179
12317	2-175, 3-41
12459	2-171, 3-45, 3-69, 3-71, 3-73, 3-85, 3-87, 3-89
12549	3-57, 3-59
130041	2-75
13048	2-61
13124	2-95
13248	2-187
13902	4-39, 4-43
13904	4-41, 4-43
13907	4-3, 4-7, 4-13, 4-17
13959	3-31
14242	2-147
14296	2-43
14595-1	2-153
14605	2-153
150516	2-75
15331	2-183
15543	2-95, 2-99
15555-1	2-113
15555-2	4-75, 4-77
15675	3-3, 3-5, 3-7, 3-9, 3-11, 3-13, 3-15, 3-17
15724	2-71
16387	2-63, 2-65
16411	2-4
16412	2-4
16431	2-159, 2-161
16455	2-169
16456	2-27
16694	4-33
16695	4-32, 4-33
16735	2-33, 2-55, 2-107, 2-151, 3-93
16738	2-61
16930	2-185, 3-73, 3-89
16931	2-13, 2-17, 2-19, 2-23, 2-31, 2-33, 2-107, 2-109, 2-117, 2-123, 2-125, 2-135, 2-137, 2-139, 2-141, 2-143, 2-153, 2-175, 2-185, 3-3, 3-5, 3-11, 3-13, 3-41, 3-51, 3-53, 3-75, 3-76
17414	2-41, 2-71, 2-73, 2-121, 2-123, 2-125
17521	2-73
17808	2-147
17809	2-147
17980	2-167, 2-169, 2-187, 3-45
19035	3-97, 3-99
19065	2-67, 2-87, 2-187, 3-27, 3-29
19066	2-13, 2-15, 2-19, 2-29, 2-33, 2-59, 2-97, 2-101, 2-123, 2-125, 2-137, 2-139, 2-153, 2-167, 2-175, 2-187, 2-189, 2-191, 2-192, 3-3, 3-5, 3-7, 3-9, 3-11, 3-13, 3-15, 3-17, 3-19, 3-21, 3-23, 3-25, 3-41, 4-49, 4-51
19117	2-187, 4-34
19311	2-45, 2-47, 2-49
19312	2-67, 2-83, 2-87, 2-107, 2-109
19313	2-135, 2-137, 2-139, 2-165, 2-187
19315	2-45, 2-47, 2-49, 2-67, 2-83, 2-87
19317	2-67, 2-75, 2-83, 2-87
19459	2-163
19544	2-155
19747	2-59
19760	2-123
19774	2-41
20177	2-55, 2-57, 2-123, 2-125, 3-75, 3-79, 3-93, 3-95
20192	2-173, 3-47
21041	3-97, 3-99
21047	3-97, 3-99
21054	3-97, 3-99
21104	3-97, 3-99
21109	2-175
21117	2-159, 2-161
21119	2-159, 2-161
21131	2-17
21136	2-103, 2-105
21138	2-103, 2-105, 2-107
21150	4-49, 4-51
21168	2-7, 2-9, 2-11
21195	2-55, 2-57, 2-89, 2-165, 2-189, 3-57, 3-59, 3-93
21197	2-45, 2-47, 2-49, 2-55, 2-57, 2-83, 2-87, 3-93
21198	2-45, 2-47, 2-49, 2-153, 3-79
21215	2-173
21221	2-33
21223	3-91
21230	2-19
21231	2-175, 3-41

Part Number	Page Number
21237	3-75, 3-79, 3-93, 3-95
21238	2-173
21241	2-185
21246	3-55
21250	3-47
21251	3-47
21252	3-47
21259	2-149
21282	2-9, 2-11
21294	2-41
21301	3-109
21303	2-37
21309	4-47
21313	4-49, 4-51
21671	3-106
21672	2-149
21722	2-31
21728	4-67, 4-69
21729	2-159, 2-161
21731	2-111, 2-113, 2-115
21732	2-111, 2-113, 2-115
21740	2-145
21791	3-114
21792	5-15, 6-15
21793	5-15, 6-15
21794	5-15, 6-15
21917	4-38, 4-39, 4-43
222460	2-175
22290	2-189
22308-3	2-119, 2-121, 2-123
22324	2-121
22626	2-145, 4-29
22629	4-29, 4-31
22630	4-29, 4-31
22636	4-29, 4-31
22645	4-29, 4-31
22646	4-29, 4-31
23146	3-97, 3-99
23156	2-71, 2-73, 2-121, 2-123, 2-125
23498	2-185
23935	3-109
23936	2-175, 3-41
23946	2-13
23950	2-21
24012	2-107, 2-109
24047	2-119, 2-121, 2-123, 2-125
24199	2-191
24450	3-65, 3-73, 3-83, 3-89
24576	3-27, 3-29
24576-1	3-31
24899	2-179
24924	2-61
24928-1	2-119, 2-121, 2-123, 2-125
25014	2-105, 2-107, 2-109
25046	2-19, 2-59, 2-153, 4-49, 4-51
25047	2-67, 2-83, 2-87
25312	3-105
25610	2-111, 2-113, 2-115
26395-2	3-97, 3-99
26496	2-119, 2-121, 2-123, 2-125
26565	3-97, 3-99
27048	2-73, 2-115, 2-119, 2-121, 2-123, 2-125
27767	2-73
27980	2-50, 2-67, 2-83, 2-87
27988	2-189
27990	2-135, 2-137, 2-139, 3-93
27991	2-53, 2-55, 2-57, 3-75
27992	3-79, 3-95
29233	3-7, 3-15
29570	2-75
30013	3-51, 3-53
30251	2-179
30252	2-179
30253	2-179
30255	2-179
30268	3-65, 3-73, 3-83, 3-89
30389	2-61, 2-71, 2-73
30407	2-123, 2-125
30533	3-107
31038	2-41
311303	4-47
311336	2-15, 4-49, 4-51
311828	2-75
31354	4-32
31380	4-33
31385	4-33
31507	3-65, 3-73, 3-83, 3-89
31525	3-75, 3-79, 3-91, 3-93, 3-95
31526	2-41
31563	2-159, 2-161
31603	2-161
31605	2-167
31613	2-4, 2-163
31775	2-151
31922	3-31
31954	3-19, 3-23
31999	2-37
32006	2-37
32009	2-37
32129	2-167
32425	2-45, 2-47
32436	2-155
32483	2-9, 2-11, 2-45, 2-47, 2-49, 2-67, 2-73, 2-87, 2-89, 2-117, 2-133, 2-151, 2-179, 2-185, 2-187, 3-27, 3-29, 4-47, 4-49, 4-51
32485	2-17, 2-19, 2-50, 2-53, 2-55, 2-57, 2-89, 2-153, 2-171, 2-173, 2-189, 3-45, 3-47, 3-76, 3-79, 3-93, 3-95
32486	2-17, 2-19, 2-31, 2-143, 2-145, 2-153, 2-171, 2-179, 2-189, 3-45
32490	2-17, 2-23, 2-67, 2-83, 2-87, 2-95, 2-99, 2-117, 2-135, 2-139, 2-153, 2-187, 3-3, 3-5, 3-11, 3-13, 3-45, 3-55, 3-69, 3-71, 3-73, 3-85, 3-87, 3-89
32491	2-15, 2-17, 2-19, 2-23, 2-31, 2-33, 2-53, 2-97, 2-101, 2-107, 2-109, 2-117, 2-123, 2-125, 2-129, 2-131, 2-135, 2-137, 2-139, 2-141, 2-143, 2-145, 2-151, 2-153, 2-165, 2-173, 2-176, 2-185, 2-187, 3-41, 3-47, 3-57, 3-59, 3-75, 3-76, 3-79, 3-95
32492	2-9, 2-11, 2-17, 2-25, 2-27, 2-37, 2-45, 2-47, 2-49, 2-53, 2-107, 2-109, 2-135, 2-137, 2-139, 2-143, 2-151, 2-153, 2-171, 2-173, 2-175, 2-185, 3-7, 3-9, 3-15, 3-17, 3-41, 3-45, 3-47, 3-57, 3-59, 3-73, 3-75, 3-79, 3-89, 4-49, 4-51
32493	2-13, 2-21, 2-23, 2-45, 2-47, 2-49
32495	3-95
32522	2-13
32598	2-147
32668	3-51, 3-53
32895	2-179
32899	2-153
32960	3-51, 3-53

Part Number	Page Number
32978	2-115, 2-117, 3-75, 3-79, 3-93, 3-95
32980	2-57, 2-115, 2-117
32981	2-59, 2-117, 2-187
32982	2-73, 2-107, 2-109, 3-19, 3-21, 3-23, 3-25
32984	2-135, 2-137, 2-165, 2-187
32985	2-145, 2-173, 3-47
32987	2-145
330120	3-114
330122	3-114
330123	3-114
33342	3-42
33404	2-181
33799	2-159, 2-161
33806	2-13, 3-33, 3-35
33817	2-163
33924	2-175, 3-41
33951	2-61, 2-69
34072	2-71
34159	4-5, 4-9, 4-15, 4-19
34176	4-32
34178	4-27, 4-29, 4-31
34179	4-27, 4-29
34180	4-27
34181	4-27, 4-29, 4-31
34182	4-27
34183	4-27, 4-29, 4-31
34184	4-27, 4-29, 4-31
34185	4-27, 4-29
34195	2-171, 3-45
34306	2-4, 2-163
34323	2-9, 2-11, 2-17, 2-23
34330	2-179
34355	2-159, 2-161
34359	2-145, 2-181
34360	2-159, 2-161
34379	2-159, 2-161
34390	2-163
34392	2-31
34738	3-109
34821	2-143
34848	3-31
34864	2-39, 3-109
34877	3-75
35323	2-5
35324	2-5
35325	2-5
35326	2-5
35327	2-5
35336	2-5
35586	2-135, 2-137, 2-139
35688	2-31
35706	2-151
35707	2-123, 2-125
35756	2-53, 2-55, 2-57, 3-75, 3-79, 3-95
35980	2-43
36014	5-23, 6-23
36048	5-15, 6-15
36050	2-4, 2-61, 2-111
361160	2-7
36158	3-97, 3-99
36164	5-21, 6-21
36165	2-41, 2-63, 2-75
36192	2-19
36268	5-3, 5-6, 6-3, 6-6
36328	2-173, 2-179, 3-47
36556	2-169
36643	2-151
36758	2-7, 2-171, 3-45
369701	2-145
369704	2-17
369786	3-57, 3-59
370011	2-5
370102	5-17, 6-17
370103	5-17
370829	5-9, 6-9
370847	6-3
370848	6-3
370850	6-3
370851	6-5
370852	6-11
370853	6-11
370854	6-11
370855	6-13
370873	6-3
370875	6-24
370876	5-21, 6-21
370888	6-22
370889	6-22
370890	6-22
370891	6-22
370892	6-22
37127	5-11
371500	2-59
371502	2-59
371503	2-59
371504	2-59
371505	2-59
371507	2-45
371508	2-45, 2-47, 2-49
371509	2-45, 2-47, 2-49, 2-53, 2-67, 2-83, 2-87, 3-75, 3-93
371512	2-45, 2-47, 2-49
371516	2-45, 2-47, 2-49
371517	2-45
371518	2-45, 2-47, 2-49
371519	2-45, 2-47, 2-49
371520	2-45, 2-47, 2-49
371526	2-53, 2-55, 2-57, 3-79, 3-93, 3-95
371527	2-53, 2-55, 2-57
371528	2-53
371529	2-53
371532	2-63
371538	2-63
371553	2-67
37157	5-5, 5-11
371572	2-45
371573	2-105, 2-107
371646	2-63, 2-76
371647	2-63, 2-76
371649	4-75, 4-77
371651	4-71, 4-73, 4-75, 4-77
371653	4-71, 4-73, 4-75, 4-77
371654	4-71, 4-73, 4-75, 4-77
371658	2-63, 2-76
371660	4-71, 4-73, 4-75, 4-77
371661	2-113
371662	2-113
371665	4-71, 4-73
371666	4-71, 4-73
371669	4-71, 4-73
371713	4-71, 4-73
371714	4-71, 4-73, 4-75, 4-77
371715	4-71, 4-73, 4-75, 4-77
371716	4-75, 4-77
371718	4-71, 4-73, 4-75, 4-77
371749	2-75
371750	2-75
371754	2-75
371755	2-75
371757	2-75
371759	2-75
371761	2-45, 2-47, 2-49
371762	2-45
371763	2-63
371764	2-75
371765	2-63
371766	2-63, 2-75
371767	2-63, 2-75
371768	2-75
371770	2-53
371865	2-57
371875	2-67, 2-83, 2-87
371877	2-67, 2-83, 2-87
371894	2-75, 4-71
371895	2-75, 4-73
371896	2-63, 4-75
371897	2-63, 4-77
371899	4-75, 4-77
371901	4-75
371902	4-75, 4-77
371908	4-75, 4-77
371921	2-222
372235	2-225, 2-227, 2-228
372236	2-225, 2-227, 2-228
372237	2-225, 2-227, 2-228
372251	7-7

Part Number	Page Number
372440	2-115, 2-117
372445	2-47, 2-49
372456	2-47, 2-49
372457	2-47
372458	2-47, 2-49
372464	7-7
372466	2-65, 2-67, 2-83, 2-87
372470	2-67, 2-79, 2-83, 2-87
372472	2-65, 2-67, 2-79, 2-83, 2-89
372473	2-47, 2-49
372474	2-47, 2-50
372479	2-47, 2-49
372483	2-65, 2-79
372484	2-79
372488	2-65
372489	2-65, 2-79
372490	2-65, 2-79
372491	2-107
372492	2-65, 2-67, 2-79, 2-84, 2-87
372493	2-65, 2-79, 2-83, 2-87
372495	2-79
372496	2-79
372497	2-79
372498	2-79
372500	2-79
372501	2-79
372503	2-79
372504	2-79
372505	2-79
372506	2-79
372507	2-79
372508	2-79
372510	2-79
372511	2-79
372512	2-79
372514	2-79
372515	2-79
372516	2-79
372517	2-79
372518	2-79
372523	2-79
372526	2-79
372527	2-79
372528	2-79, 2-83, 2-89
372529	2-83, 2-89
372531	2-79
372539	2-84, 2-89
372545	2-65, 2-67, 2-79, 2-83
372569	2-79
372577	2-79
372579	2-83, 2-87
372608	2-79
372610	2-79
372611	2-79
372612	2-79
372615	2-79
372651	2-4, 2-97, 2-101
372652	2-4, 2-97, 2-101
372859	2-79
372860	2-65
372891	2-65, 2-79
372899	2-79
372937	2-75
372950	4-67, 4-69
372951	4-67, 4-69
373201	4-25
373207	4-25
373211	4-25
373218	4-7, 4-17
373226	4-31
373232	4-25
373235	4-25
373236	4-31
373242	4-25
373243	4-25
373254	2-155, 4-25
373255	4-25
373256	4-25
373258	4-25
373259	4-25
373276	4-25
373284	4-25
373291	4-31
373369	4-13, 4-17, 4-21
373371	4-21
373372	4-21
373373	4-21
373374	4-9, 4-19
373375	4-9, 4-19
373404	2-155
373405	3-112
373406	4-9, 4-19
373407	4-7, 4-17
373408	4-7, 4-17
373409	4-7, 4-17
373410	4-7, 4-17
373412	4-9, 4-19
373413	4-9, 4-19
373414	4-7, 4-17
373415	4-7, 4-17
373457	4-25
373458	4-25
373464	2-145, 4-31
373541	4-31
373542	4-31
373543	4-31
373544	4-31
373545	4-31
373546	4-31
373547	4-31
373548	4-31
373549	4-31
373584	4-81
373585	4-81
374012	3-97, 3-99
374127	2-61, 2-69
374129	3-65, 3-73, 3-83, 3-89
374133	3-111
374134	3-63, 3-69, 3-71, 3-111
374135	3-63, 3-69, 3-71, 3-111
374154	2-73
374158	2-119, 2-123, 2-125
374210	3-63, 3-69, 3-71, 3-81, 3-85, 3-87
374230	2-135, 2-137, 2-139
374240	2-151
374274	6-24
374294	4-47, 4-49, 4-51
37460	4-3, 4-7, 4-13, 4-17
374615	2-71
37462	4-3, 4-7, 4-13, 4-17
374625	2-61
374648	2-71
374649	2-71
374759	4-47
374765	4-47, 4-49, 4-51
375193	2-43
375400	2-171
375401	2-171, 3-45
375402	2-171
375403	3-45
375404	2-171, 3-45
375415	2-175, 3-41
375416	2-175, 3-41
375417	3-45
375511	2-135, 2-137, 2-139
375512	3-65, 3-73, 3-83, 3-89
375513	2-19
375526	2-151
375537	2-19
37555	4-33
375563	2-169, 4-41
375564	2-33
375565	2-33
375566	2-33
375575	2-145
375576	2-145
375586	2-135, 2-137
375666	2-175
375693	2-21
375695	2-21
375696	2-13
375698	2-13
375718	2-61, 2-69
375721	2-185
375726	3-65, 3-83
375728	3-65, 3-73, 3-83, 3-89
375729	3-67
375751	3-65

Part Number	Page Number
375762	2-145
37723	4-27, 4-29, 4-31
377537	2-4
377538	2-4
377540	2-4
37766	4-27, 4-29
37943	4-27, 4-29, 4-31
380514	2-153
380532	2-17
380533	2-17
380544	3-76, 3-79
380563	3-67
380566	2-153
380567	2-153
380568	2-153
380576	3-63, 3-69
380577	4-47, 4-54
380578	4-59, 4-61
380579	4-59, 4-61
380591	2-91, 2-93, 2-95, 2-97, 2-99, 2-101
380592	2-91
380598	2-43
380612	3-81, 3-85
380613	3-63, 3-69, 4-59
380614	3-81, 3-85, 4-63
380615	3-63, 3-69, 3-71, 3-81, 3-85, 3-87
380616	4-59, 4-61, 4-63, 4-65
380617	3-63, 3-69, 3-71, 3-81, 3-85, 3-87
380618	3-65, 3-83
380619	3-63, 3-69, 3-71, 3-81, 3-85, 3-87
380620	3-65, 3-83
380621	3-65, 3-83
380624	3-63, 3-69, 3-71
380625	3-63, 3-69, 3-71, 4-55
380626	4-55, 4-57
380627	4-55, 4-57
380628	4-55, 4-57
380630	3-63, 3-69, 3-71
380634	3-55
380635	3-55
380640	3-27
380643	3-19
380644	3-23
380649	4-59, 4-61, 4-63, 4-65
380650	4-59, 4-61, 4-63, 4-65
380651	4-59, 4-61
380652	4-59, 4-61
380659	4-59, 4-61, 4-63, 4-65
380660	4-63, 4-65
380661	3-63, 3-69, 3-71, 3-81, 3-85, 3-87
380662	3-63, 3-69, 3-71, 3-81, 3-85, 3-87
380663	3-63, 3-69, 3-71, 3-81, 3-85, 3-87
380665	3-63, 3-69, 3-71
380666	4-55
380667	4-55, 4-57
380668	4-55, 4-57
380669	4-55, 4-57
380670	4-55, 4-57
380671	4-55, 4-57
380673	3-63, 3-69, 3-71
380675	2-159
380676	3-67
380680	2-13
380681	2-25
380683	2-153
380684	3-63, 3-69, 3-71
380685	3-65
380686	3-65
380689	3-63, 3-69, 3-71, 3-81, 3-85, 3-87
380690	3-63, 3-69, 3-71, 3-81, 3-85, 3-87
380691	3-19, 3-23, 3-27, 3-29
380692	2-13, 4-47
380697	3-67
380702	3-91
380709	2-4
380710	2-4
380712	3-31
380717	2-151
380728	2-13
380736	2-163
380748	2-133
380754	2-135
380760	2-19
380761	2-19
380762	2-19
380763	2-19
380764	2-19
381391	2-137, 2-139
381962	2-33
382507	2-135
382516	2-191
382726	2-33
382978	3-27, 3-29
382979	3-51, 3-53
383014	2-73
383165	2-191
383170	2-73
384156	4-53
384971	2-83, 2-89
384973	2-83
384974	2-65, 2-67, 2-79, 2-83, 2-87
384975	2-83
384977	2-83
384978	2-83, 2-89
384979	2-83, 2-89
384985	2-67
384986	2-83
384996	2-83
384998	2-227, 2-228
384999	2-227, 2-228
385000	2-67, 2-83, 2-89
385001	2-67, 2-83, 2-87
385002	2-67, 2-83, 2-87
385003	2-67, 2-83, 2-87
385004	2-67, 2-83
385006	2-67, 2-83
385007	2-67, 2-83
385008	2-67, 2-83, 2-87
385009	2-117
385010	2-227
385011	2-84, 2-89
385012	2-83
385013	2-84, 2-89
385014	2-83
385015	2-83, 2-89
385016	2-83, 2-87
385017	2-83, 2-87
385018	2-227
385019	2-47, 2-49
385412	2-43
385414	2-61
385415	2-61
385417	2-41
385426	2-43
385433	2-43
385439	3-114
386063	2-121
388407	4-59, 4-63
39005	2-17
391841	2-173
391890	4-75
391891	4-71
39210	2-27, 2-31, 2-163
392258	2-75
392561	2-45
392563	2-45
392564	2-222
392570	2-63, 2-75
392590	2-129, 2-131, 2-133
392591	2-129, 2-131
392593	2-113
392594	2-113
392597	2-113
392598	2-115
392611	2-53, 2-55, 2-57
392613	3-75
392622	2-45, 2-47
392629	2-113, 2-115, 2-117
392642	2-45, 2-47
392647	2-131, 2-133
392649	2-113

Part Number	Page Number
39277	2-13, 2-15, 2-31, 2-135, 2-137, 2-139, 2-141, 2-189, 3-75, 3-93
39278	2-145
39279	2-151
39283	2-9, 2-11, 2-173, 2-176, 2-179, 3-41, 3-47, 3-76, 3-79
39284	2-17, 2-37, 2-50, 2-109, 2-151, 2-171, 2-173, 2-176, 3-41, 3-45, 3-47
39285	2-151, 2-153
39305	2-145
39311	2-23, 2-151, 2-173, 3-41, 3-47, 3-75
39312	2-151, 2-173, 3-47
39313	2-19, 2-21, 2-23, 2-29, 2-153
393200	2-113
393201	3-75, 3-79
393205	2-93
393207	2-93
393208	2-93, 2-95, 2-97
393216	2-129
393219	3-75
393223	3-114
393227	2-55, 2-57
393229	2-129, 2-131
393241	3-93
393244	3-75, 3-93
393252	2-105
393253	2-105
393255	3-73, 3-89
393349	4-55, 4-57
393373	2-97, 2-99, 2-101
39346	2-9, 2-11, 2-145
39349	2-13, 2-29, 2-151, 3-3, 3-5, 3-11, 3-13
39350	2-145
393662	7-7
393663	7-7
393770	3-27, 3-29, 3-51, 3-53
393806	7-7
393807	7-7
393808	7-7
393809	7-7
393810	7-7
393811	7-7
393812	7-7
393813	7-7
393814	7-7
393815	7-7
393816	7-7
393817	7-12
393818	7-12
393819	7-12
393820	7-12
393821	7-12
393822	7-12
393823	7-12
393824	7-3, 7-9, 7-11, 7-12
393825	7-12
393826	7-11, 7-12
393827	7-12
393828	7-12
393829	7-12
393830	7-12
393831	7-12
393832	7-7
393833	7-7
393834	7-11
393835	7-11
393836	7-11
393837	7-11
393838	7-11
393839	7-11
393840	7-11
393841	7-11
393842	7-11
393843	7-11
393844	7-11
393845	7-11
393846	7-11
393848	7-9
393849	7-9
393850	7-9
393851	7-9
393852	7-9
393853	7-9
393854	7-9
393855	7-9
393856	7-9
393857	7-9
393858	7-9
393859	7-9
393860	7-9
393861	7-9
393862	7-9
393863	7-9
393864	7-11
393865	7-9
393866	7-11
393867	7-9
393868	7-9
393869	7-9
393870	7-9
393871	7-9
393872	7-7
393873	7-11
393874	7-11
393875	7-11
393876	7-11
393877	7-11
393878	7-11
393879	7-11
393880	7-11
393881	7-11
393882	7-7
393883	7-7
393884	7-7
393886	7-7
393887	7-7
393888	7-7
393889	7-7
393890	7-7
393894	7-3
393895	7-3
393896	7-3
393897	7-3
393898	2-63, 2-65, 2-75, 2-79, 7-3, 7-5
393899	7-3
393900	7-3
393901	7-3
393902	7-3
393903	7-3
393904	7-3
393905	2-63, 2-65, 2-75, 2-79
393906	2-63, 2-65, 2-75, 2-79
393907	2-63, 2-65, 2-75, 2-79
393908	2-63, 2-65, 2-75, 2-80
393909	2-63, 2-65, 2-75, 2-80
393910	2-63, 2-65, 2-75, 2-80
393911	2-63, 2-65, 2-75, 2-80
393912	2-63, 2-65, 2-75, 2-80
393913	2-63, 2-65, 2-75, 2-80
393914	2-63, 2-65, 2-75, 2-80
393915	2-63, 2-65, 2-75, 2-80
393916	2-63, 2-65, 2-75, 2-80
393917	7-3
393918	7-3
393919	7-5
393920	7-5
393921	7-5
393922	7-5
393923	7-5
393924	7-5
393925	7-5
393926	7-5
393927	7-5
393928	7-5
393929	7-5
393930	7-5
393931	7-5
393932	7-5

Part Number	Page Number
393933	7-3
393934	2-4, 7-3
393935	7-3
393936	7-3
393937	7-3
393938	7-3
393939	7-5
39394	2-5
393940	7-5
393941	7-5
393942	7-5
393943	7-5
393945	7-5
393946	7-5
393947	7-5
393948	7-5
393949	7-5
393950	7-5
393951	7-3
393952	7-3
393953	7-3
393954	7-3
393955	7-3
393956	7-3
393957	7-3
393958	7-3
393959	7-3
393960	7-3
393961	7-3
393962	7-3
393963	7-3
393964	7-3
393965	7-5
393966	7-5
393967	7-5
393972	2-75
393973	2-45
393975	2-45
393982	2-59
393984	2-45, 2-65, 2-67, 2-79, 2-83, 2-87
393993	7-3
393994	2-45, 2-47, 2-49, 2-53
393998	2-53, 2-55, 2-57
394916	2-225, 2-227, 2-228
39527	4-32
39534	2-187
39670	3-75, 3-79
39703-2	2-4, 5-3, 6-3
397779	4-47
39810	2-155
398315	2-217
39923	2-39, 3-109
40380	4-27
40514	2-163
40573	3-65, 3-73, 3-83, 3-89
40585	2-111, 2-113
40607	2-39, 2-71, 3-109
40678	2-39, 3-109
40716	2-15
40870-8	2-185
41016	2-113, 3-65, 3-73, 3-83, 3-89
41073	2-145
41130	2-185
41131	2-175, 2-183
41139	3-31
41140	3-31
41141	2-17, 3-51, 3-53
41142	2-50, 2-55, 2-57, 3-93
41169	2-153
41178	2-9, 2-11, 2-91, 2-93, 2-95, 2-99, 3-55
41185	2-9, 2-11, 2-17, 2-19, 2-23, 2-171, 3-45
41186	2-13, 2-33, 2-55, 2-57, 2-135, 2-137, 2-139, 2-141, 2-143, 2-189, 3-41, 3-75, 3-79, 3-93, 3-95
41187	2-165
41295	2-133
41342	2-173, 2-175, 3-47
41345	2-19
41346	2-19, 2-179
41430	2-19, 2-33, 2-50, 2-135, 2-137, 2-139, 2-151, 2-153, 2-171, 2-173, 2-176, 2-185, 3-41, 3-45, 3-47, 3-76, 3-79
41434	3-57, 3-59
41722	2-153
42011	2-53, 2-55, 2-57, 3-109, 4-49, 4-51
42124	3-97, 3-99
42207	2-171
42215	2-163, 2-169, 3-41
42226	2-187
42260	2-163, 2-165
42368	2-115, 2-117
43242	3-65, 3-73, 3-83, 3-89
43363	2-7
43454	2-39, 3-109
43500	2-4, 2-7
43555	2-37, 2-91, 2-93, 2-95, 2-99
43558A	3-65, 3-73, 3-83, 3-89
43611	2-123, 2-125
43844	2-61, 2-69, 2-113, 2-115, 2-117, 2-133
43952	3-57, 3-59
43955	2-9, 2-11
43958	2-145
44078	2-189
44681	3-11, 3-15, 3-19, 3-23
44681-1	3-11, 3-15, 3-23
44681-2	3-11, 3-15, 3-19, 3-23
44777	2-15
44851	2-21, 2-23, 3-55
44868	2-167, 3-45
44869	2-167, 2-169, 2-179, 2-187
44906	2-135
44961	3-109
45142	3-65, 3-73, 3-83, 3-89
45177	2-91, 2-93, 2-95, 2-99
45272	3-3, 3-7, 3-11, 3-15
45482	2-167, 3-45
45622	4-27, 4-29, 4-31
45623	4-27, 4-29, 4-31
45628	4-32, 4-33
45779	3-3, 3-7, 3-11, 3-15, 3-19, 3-23
45780	2-7
45786	2-149
46236	2-151, 3-109
46481	2-155, 2-165
46482	3-41
46611	2-71, 2-73
46800	2-135
47167	2-63, 2-75
47313A	2-61
47504	2-139, 2-169, 2-175
47508	2-155, 2-171, 3-45
47512	2-27, 2-135, 2-137, 2-139
47522	2-145
47585	2-189
47637	3-45
47638	2-27, 2-169
47720	2-119, 2-121, 2-123, 2-125
47753	2-139, 3-45
47958	2-19
48006	2-19
48014	2-91, 2-93, 2-95, 2-99
48056	2-135, 2-137, 2-139
48069	2-37
48267	2-111, 2-113, 2-115
48282	2-121
49032	3-57
49263	2-7, 2-189

Part Number	Page Number
49266	2-39, 3-3, 3-5, 3-7, 3-9, 3-11, 3-13, 3-15, 3-17, 3-19, 3-21, 3-23, 3-25, 3-27, 3-29, 3-31, 3-63, 3-69, 3-71, 3-109, 3-111
49766	3-109
49933	2-169
49934	2-59
50121	2-155, 2-163
50335	2-45, 2-47, 2-49, 2-115, 2-117, 2-121
50474	4-47
50902	2-45, 2-47, 2-49, 2-55, 2-57, 2-123, 2-125, 2-135, 2-137, 2-139, 2-151, 2-179, 2-187, 3-57, 3-59, 3-75, 3-79, 3-93, 3-95
50960	2-135, 2-137, 2-139
51021N	2-5
51109	2-151
51176	2-13
51193	2-147
51305	2-75, 2-133, 2-135, 2-137, 2-139
51322	2-135, 2-137, 2-139, 2-165
51338	2-147
51340	2-145
51341	2-145
51373	2-147
51448	2-179
51449	2-179
51483	2-151
51531	3-97, 3-99
51534	2-181
51542	2-5
51545	2-151
51560-5	2-97, 2-101
51562	2-151
51564	2-179
51693	2-183
51787	2-19, 2-33
51813	2-175, 3-41
51839	2-71, 2-73, 2-93
52402	2-135, 2-137, 2-139, 2-169
53029	2-69, 2-113
53268	2-71
53395-2	2-121
53400-1	2-119, 2-121, 2-123, 2-125
53400-4	2-119, 2-121, 2-123, 2-125
53434	2-179, 4-32
53461-2	2-17, 2-21, 2-23
53468	2-129, 2-131, 2-133
53601	2-145, 4-44
54009	3-97, 3-99
54012	3-97
54140	2-115
54222	2-153
54274	2-187
54275A	2-187
54333	5-3, 6-3
54396	2-45, 2-47, 2-49, 2-129, 2-131
54527	2-91, 2-93, 2-95, 2-99
54528	2-91, 2-93, 2-95, 2-99
54615	2-15
54833	2-145
54862	2-187
54878	2-179
54911-32	2-127, 2-129, 2-131, 2-133, 5-3, 6-3
55248	3-3, 3-5, 3-7, 3-9, 3-11, 3-13, 3-15, 3-17, 3-19, 3-21, 3-23, 3-25, 3-27, 3-29, 3-63, 3-69, 3-71, 3-111
55347	2-45, 2-50
55586	2-163, 2-179, 2-187
55685	2-169
55686	2-27
55700	2-159, 2-161
55779	2-179
55845	2-19
56185	2-189
56186	2-192, 3-3, 3-5, 3-7, 3-9, 3-11, 3-13, 3-15, 3-17, 3-19, 3-21, 3-23, 3-25, 3-63, 3-69, 3-71, 3-81, 3-85, 3-87, 3-109
56346	2-191
56398	2-189
56690	2-115, 2-167, 2-175, 2-189, 3-41, 3-45
56692	2-155, 2-187
56820	2-145, 2-175
56821	2-139, 2-187
56976A	2-119, 2-121, 2-123, 2-125
56992	2-191, 3-81, 3-85, 3-87
57048	2-43, 2-45, 2-47, 2-49
57167	2-192, 4-63, 4-65
57173	2-159, 2-161
57297	2-119, 2-121, 2-123, 2-125
57311	2-151
57411	2-169
57568	2-161
57751	2-192, 3-55
57772	2-175
57773	2-43, 2-45, 2-47, 2-49
57803	2-192, 3-55
57804	2-225, 2-227, 2-228
57807	2-175, 2-181, 2-191, 3-41
57820	2-21, 2-23
57934	2-61
57936	2-25, 2-27
57941	2-7
57944	2-159, 2-161
57963	2-159, 2-161, 3-49
57988	2-169
57993	2-167
57994	2-163
58114	2-185
58228	2-135, 2-137, 2-139, 2-185
58242	4-23
58270	4-32
58278	4-32
58293	2-25
58357	2-37
58359	2-27
58366	2-17, 2-59
58489	2-9, 2-21, 2-23
58490	4-49, 4-51
58518	3-3, 3-7
58519	3-3, 3-7
58520	3-3, 3-7, 3-19
58524	2-33
58589	2-119, 2-121, 2-123, 2-125
58590	2-119, 2-121, 2-123, 2-125
58596	4-37
58844	2-11, 2-17
58858	2-155, 2-163
58898	2-9, 2-11
59015	2-111
59156	3-75
59192	2-19, 2-21, 2-23
59305	4-23
59375	2-41
59577	2-167
59633	2-37
59661	2-19
59668	2-153
59672	2-153
59767	2-240
59808	2-71
59866	2-27
59901	3-65, 3-73, 3-83, 3-89
59921	3-109
59954	3-109
59965	2-25, 3-27, 3-29
59970	2-191

Part Number	Page Number
59971	2-191
59974	2-191
59976	2-191
59977	2-191
59978	2-191
59979	2-191
60293	2-141
60559	2-41
60725	2-71, 2-73
60726	2-71, 2-73
60751	3-31
60762	2-61
60806	5-5, 5-6, 6-5, 6-6
60812	5-22
60813	5-22, 6-22
60814	5-22, 6-22
60817	5-6, 6-6
60833	5-5, 5-13, 5-19, 6-5, 6-13, 6-19
60834	6-5, 6-13
60836	5-21, 6-21
60846	2-4, 5-24, 6-24
60933	2-4, 2-91, 2-93, 2-95, 2-99
60934	2-4, 2-91, 2-93, 2-95, 2-99
60938	5-9, 6-9
61288	2-163
61363	2-41, 2-53, 2-55, 2-57
61365	3-31
61490	4-32, 4-33
61529	2-41
61531	2-41
61869	3-65, 3-83
61870	3-65, 3-83
61882	4-3, 4-7, 4-13, 4-17
61886	4-5, 4-9, 4-15, 4-19
61923	3-27
61931	2-41
61969	2-181, 2-191
62172	2-169
62173	2-169
62234	2-133
62389	2-155
62561	2-155, 4-23
62595-16	2-13
62595-2	2-15
62595-3	2-15
62865	2-121, 2-125
62954	2-4, 2-7
62955	2-4, 2-7
62956	2-4, 2-7
62957	2-4, 2-7
630094	2-41
63228	3-106
63233	2-37
63234	2-37
63263	2-43, 2-45, 2-47, 2-49
63276	2-153
63292	2-153
63294	2-15
63295	2-151
63297	2-37
63311	2-37
63378	2-33
63407	3-112
63416	2-135, 2-175, 2-187, 3-41, 3-45, 4-47
63426	2-145, 4-27
63436	2-179
63449	2-179
63450	2-179
63471	2-145
63491	2-145
63496	2-145
63535	2-43
63540	2-145
63541	2-179
63542	2-135, 2-137, 2-139, 4-35
63543	2-145
63544	2-7
63583	2-27
63584	2-27
63647	2-29
63663	2-7
63665	2-29
63667	2-29
63668	2-29
63669	2-29
63671	2-35
63695	2-43, 2-45, 2-47, 2-49
63751	2-13
63810	2-61, 2-65, 2-71, 2-73, 2-79, 2-83, 2-89, 2-93, 3-65, 3-73, 3-83, 3-89
63818	2-135, 2-137, 2-139
63926	2-25
64038	5-17, 6-17
64058	2-149
64141	2-191
64156	2-27
64228	2-167
64233	2-181
64278	2-17
64279	2-17
64299	2-185
64312	2-19
64392	2-37
64394	2-37
64410	2-37
64419	2-165
64434	2-169
64500	2-37
64501	2-37
64543	2-21, 2-23
64545	2-21, 2-23
64556	2-151
64558	2-151
64559	2-37
64567	2-37
64580	2-37
64586	2-189
64618	2-37, 2-135, 2-137, 2-139, 2-185
64621	2-37, 2-135, 2-137, 2-139, 2-185
64631	2-189
64635	2-151
64651	2-189
64655	2-189
64740	2-75
64757	4-47
64788	2-4, 2-9, 2-11
64801	2-9
64802	2-11
64811	2-179
64873	2-37
64874	2-37
64884	2-13
64886	2-145
64887	2-145
64893	2-31
64899	2-53, 3-75
64905	2-169
64919	2-4, 2-7
64920	2-4, 2-7
64950	2-151
65129	2-151
65145-1	2-155
65160	2-173, 3-47
65168	2-171
65170	2-173
65173	2-173, 3-47
65174	2-171, 2-173, 2-175, 3-41, 3-45, 3-47
65180	2-173, 3-47
65188	2-159, 2-161
65191	2-159, 2-161
65194	2-159, 2-161, 3-49
65195	2-159, 2-161
65196	2-159
65197	2-159, 2-161
65199	2-159, 2-161
65202	2-159, 2-161
65204	2-159, 2-161
65205	2-159, 2-161
65212	2-159, 2-161
65213	2-159, 2-161
65215	2-163
65221	2-4, 2-165
65222	2-165
65224	2-159, 2-161
65226	4-23
65227	4-27
65232	4-33

Part Number	Page Number
65235	4-37
65240	4-43
65242	2-189, 4-37
65245	2-191
65248	2-181
65249	2-181
65252	2-19
65258	3-33
65278	2-33
65281	2-33
65527	2-71
65561	2-175, 3-41
66020	2-5
67310	2-155
67366	2-143, 2-171, 3-45
67683	3-45
67767	2-27, 2-123, 2-125, 2-145
68445	3-57, 3-59
68866	2-153
68869	2-141, 2-143
69097	2-69
69234	2-50, 2-167, 2-185
69904	2-7
69906	2-33
70006	2-163
70072	2-163
70160	2-41
70173	2-111, 2-113, 2-115
70218	2-189
70219	2-189
70284	2-17
70388	2-29
70398	2-192
70400	2-213
70402	2-192
70407	2-21, 2-23
70411	2-192
70431	2-173, 3-47
70435	2-119, 2-121, 2-123, 2-125
70450	2-13
70453	2-4, 2-9, 2-11
70454	3-33
70477	2-111, 2-113, 2-115, 2-117
70478	2-15
70506	2-151
70517	2-7
70521	2-173
70524	2-173, 3-47
70525	2-173, 3-47
70526	2-173, 3-47
70532	2-175, 3-41
70536	2-240
70538	2-5
70550	2-151
70597	2-9
70598	2-11
70603	4-67, 4-69
70609	4-67, 4-69
70611	4-69
70612	4-67
70613	4-67, 4-69
70615	4-67, 4-69
70617	4-67, 4-69
70618	4-67, 4-69
70620	3-55
70622	2-189
70623	2-189
70626	2-173, 3-47
70627	2-173, 3-47
70628	2-21, 2-23
70631	2-103
70635	2-127, 2-131, 2-133
70636	2-127
70649	2-5
70650	2-37
70651	2-37
70659	3-97, 3-99
70668	3-97
70669	3-33
70686	3-36
70690	3-107
70692	3-105
70699	3-51
70704	2-13
70705	2-240
70709	2-189
70717	2-189
70718	2-119, 2-121, 2-123, 2-125
70719	2-119, 2-121, 2-123, 2-125
70725	2-153
70730	2-33
70742	2-33
70747	2-153
70749	2-153
70754	2-127
70756	2-13
70761	2-33, 3-57, 3-59
70762	2-33
70767	2-113
70775	2-187
70783	2-153
70785	3-55
70788	3-55
70790	2-187
70793	3-38
70802	3-38
70808	2-11
70809	2-9
70810	2-187
70815	3-38
70825	2-185
70827	2-169
70832	2-103, 2-105
70843	2-7
70844	2-7
70847	2-169
70849	2-71
70851	3-109
70876	2-61, 2-69
71552	2-159, 2-161
71725	4-25
72970	2-189
72978	2-93, 3-65, 3-83
72979	2-71, 2-73, 3-65, 3-83
73017	2-69
73020	2-71
73645	2-7
73646	2-185
73648	2-9
73649	2-11
73650	2-185
73654	2-4, 2-9, 2-11
73678	2-29
73679	2-29
73685	2-185
73717	3-75
73724	2-7
73727	2-39
73731	2-145
73733	2-145
73734	2-37
73736	2-191
73737	2-175, 3-41
73749	2-29
73751	3-7
73753	3-15
73755	3-3
73757	3-11
73771	2-29
73772	2-29
73862	2-7
73863	2-7
73870	2-4, 2-9, 2-11
73871	3-97, 3-99
73880	3-97, 3-99
73887	2-29
73888	2-4, 2-9, 2-11
73898	3-3, 3-7, 3-11, 3-15
73899	3-3, 3-7, 3-11, 3-15
73917	5-3, 5-15, 6-3, 6-15
73920	5-3, 6-3
73921	5-3, 6-3
73927	5-6, 6-6
73936	5-6, 6-6
73937	5-19, 6-19
73950	5-3, 6-3
73954	5-19, 6-19
73958	5-3, 6-3
73967	5-19, 6-19
73970	5-19, 6-19
73975	5-3
73977	5-22
73978	5-22
73979	5-22

Part Number	Page Number
73980	5-22
73981	5-22
73982	5-22
73995	5-21, 6-5, 6-21
73996	5-23, 6-23
74000	3-3, 3-5, 3-7, 3-9, 3-11, 3-13, 3-15, 3-17, 3-21, 3-25
74007	3-33, 3-35
74015	2-33
74022	2-151
74040	2-17
74045	2-29
74046	2-29
74051	2-153
74059	2-173, 3-47
74060	2-173
74062	2-9
74063	2-11
74064	2-7
74066	2-7
74067	2-7
74069	2-29
74074	3-97, 3-99
74076	2-41
74081	2-13
74082	2-135, 2-137, 2-139
74089	2-119, 2-121, 2-123, 2-125
74090	2-175, 3-41
74094	4-33
74098	4-29, 4-43
74100	4-33
74101	4-33
74109	4-37
74110	4-37
74111	4-37
74112	4-37
74132	4-27
74133	4-27
74134	4-27, 4-29
74135	4-27, 4-29, 4-31
74136	4-27, 4-29, 4-31
74137	4-27, 4-29
74142	2-189
74145	4-39
74146	4-43
74148	4-23
74149	4-23
74150	4-23
74151	4-23
74152	4-23
74153	4-23
74154	4-23, 4-25
74156	4-23
74157	4-23
74158	4-23
74159	4-23
74160	4-23
74161	4-23, 4-25
74163	2-155
74164	3-112
74174	4-37
74182	4-37
74184	4-3, 4-7, 4-13, 4-17
74190	4-37
74194	4-37
74195	4-37
74210	4-3, 4-7, 4-13, 4-17
74214	4-29, 4-31
74218	4-37
74220	4-29, 4-31
74223	4-3, 4-7, 4-13, 4-17
74233	4-34, 4-35
74240	4-3, 4-7, 4-13, 4-17
74246	4-29, 4-31
74250	4-33
74251	4-37
74253	4-3, 4-13
74254	4-3, 4-7, 4-13, 4-17
74256	4-3, 4-7, 4-13, 4-17
74257	4-3, 4-7, 4-13, 4-17
74258	4-3, 4-7, 4-13, 4-17
74259	4-5, 4-9, 4-15, 4-19
74260	4-5, 4-15
74261	4-5, 4-15
74262	4-3, 4-7, 4-13, 4-17
74263	4-3, 4-13
74264	4-5, 4-15
74265	4-3, 4-7, 4-13, 4-17
74266	4-3, 4-7, 4-13, 4-17
74267	4-3, 4-7, 4-13, 4-17
74268	4-43
74270	4-5, 4-9, 4-15, 4-19
74271	4-5, 4-9, 4-15, 4-19
74272	4-3, 4-7, 4-13, 4-17
74273	4-3, 4-7, 4-11
74274	4-5, 4-9, 4-15, 4-19
74275	4-5, 4-9, 4-15, 4-19
74276	4-3, 4-7, 4-13, 4-17
74277	4-5, 4-9, 4-15, 4-19
74278	4-5, 4-9, 4-15, 4-19
74279	4-5, 4-15
74280	4-3, 4-7, 4-13, 4-17
74281	4-3, 4-7, 4-13, 4-17
74282	4-5, 4-9, 4-15, 4-19
74283	4-3, 4-5, 4-7, 4-9, 4-13, 4-15, 4-17, 4-19
74391	2-175, 3-41
74402	2-69
74443	2-61, 2-69
74455	2-29, 3-57, 3-59, 3-109
74509	5-15, 6-15
74516	5-3, 6-3
74527	5-15, 6-15
74536	5-7, 6-7
74538	5-5, 5-23, 6-5, 6-23
74545	5-19, 6-19
74548	5-19, 6-19
74552	5-19, 6-19
74561	5-11, 6-11
74920	2-7
74944	2-129, 2-133
75010	2-5
75011	2-5
75012	2-31
75028	2-171
75046	2-33
75047	2-33
75099	3-47
75117	3-47
75128	2-17
75142	3-45
75197	3-73, 3-89
75303	2-17
75428	2-13
75456	2-185
75456-1	2-185
75456-2	2-185
75456-3	2-185
75456-4	2-185
75465	2-39, 3-109
75575	2-151
75612	2-179
75666	2-91, 2-93, 2-95, 2-97, 2-99, 2-101
75701	3-97, 3-99
75768	2-45, 2-47, 2-49
75828	3-75, 3-91, 3-93
75854	2-111, 2-113
75861	2-25
75876	3-97, 3-99
75877	3-97, 3-99
75881	3-57
75883	2-17
75891	2-27
75899	3-47
75901	3-101, 3-103
75968	2-189
75989	3-101
76030	3-101, 3-103
76036	3-101, 3-103
76038	3-101, 3-103
76049	3-101
76055	3-101, 3-103
76069	3-101, 3-103
76074	3-101, 3-103
76081	3-101, 3-103
76084	3-101, 3-103
76099	3-57, 3-59
76100	3-101
76285	2-15
76286	3-97, 3-99
763025	2-67, 2-87
763113	2-185
763114	2-139
763116	3-65, 3-73, 3-83, 3-89

Part Number	Page Number
76316	2-163
76321	2-91, 2-93, 2-95, 2-99
76338	3-97, 3-99
763483	4-23
76383	2-103, 2-105
76384	2-29
76385	3-27, 3-51
76406	3-97, 3-99
76423	3-31
76438	2-173, 3-47
76461	3-45, 3-49
76470	2-25
76471	2-25
76474	2-29
76490	2-151
76491	2-151
76492	2-13
76495	2-13
76497	2-159, 2-161
76498	2-159, 2-161
76516	3-55
76522	3-55
76523	2-153
76570	2-109, 2-175, 2-185, 2-187, 3-41, 3-75
76647	2-153
76653	2-151
76684	3-49
76736	2-111, 2-113, 2-115
767407	2-155
76762	2-59
76825	2-97
768482	2-189
76870	2-17
76888	2-13, 2-192
768897	2-135
76898	3-57
76907	2-111, 2-113
76955	2-55, 2-57
76956	2-53
769806	2-75
769808	2-63
76996	4-47
77097	2-31, 2-167, 2-175, 2-181, 2-187, 3-41
77098	2-139
77388	2-33
77394	2-33
77399	2-19
77400	2-33
77430	2-43, 2-45, 2-47, 2-49
77434	2-43, 2-45, 2-47, 2-49
77435	2-43, 2-45, 2-47, 2-49
77452	2-135, 2-137, 2-139
77458	3-41
77459	2-175, 3-41
77463	2-25
77471	2-37
77473	2-159, 2-161
77485	2-169
77488	2-169
77490	2-141
77491	2-169
77492	2-169
77493	2-169
77498	2-169
77499	2-169
77516	2-35
77523	2-35
77531	2-185
77532	2-185
77553	2-185
77555	3-75, 3-79, 3-91, 3-93, 3-95
77558	2-111
77569	3-41
77575	2-167
77578	2-183
77579	2-141
77580	2-183
77583	2-183
77584	2-175, 3-41
77593	2-7
77597	2-175, 3-41
77600	2-175, 3-41
77601	2-175
77602	2-141
77605	2-175, 2-183
77611	3-36
77613	3-36
77632	2-4
77634	2-4
77640	2-159, 2-161
77641	2-159, 2-161
77652	3-55
77669	2-175
77674	3-67
77680	2-7
77682	2-175
77711	2-19
77727	2-175, 3-41
77734	2-7
77738	3-41
77752	3-42
77755	3-101
77759	3-101
77768	4-67
77769	4-69
77770	2-147, 4-69
77777	2-7
77782	2-7
77783	3-41
77790	2-147, 4-67
77800	4-53
77801	4-53
77802	4-53
77803	4-53
77804	4-53
77805	4-53
77806	4-53
77807	4-53
77808	4-53
77809	4-53
77811	3-63, 3-69, 3-71, 3-81, 3-85, 3-87
77812	4-47
78043	2-111
78122	2-119, 2-121, 2-123, 2-125
78750	2-127, 2-129, 2-131
78772	3-79, 3-95
78881	2-69
78897	2-61
78998	3-49
79010	2-7
79019	2-33
79025	3-109
79026	3-109
79028	2-13, 2-183
79032	2-4
79116	2-153
79138	2-31
79139	2-29
79140	2-145
79151	2-147
79152	2-145, 2-147
79153	2-145, 2-147
79155	3-109
79156	3-109
79157	3-109
79158	3-109
79159	3-109
79160	3-109
79167	3-109
79168	3-109
79169	3-109
79170	3-109
79172	3-109
79174	3-109
79177	3-109
79381	2-129, 2-131
79506	2-29
79591	2-33
79593	2-151
79594	2-151
79596	2-31
79597	2-29
79600	2-29
79608	2-7
79621	3-45
79622	3-45
79628	5-9, 6-9
79629	5-9, 6-9
79630	5-9, 6-9
79631	5-9, 6-9
79632	5-9, 6-9

Part Number	Page Number
79633	5-9, 6-9
79634	5-9, 6-9
79635	5-9, 6-9
79636	5-9, 6-9
79638	5-9, 6-9
79640	5-9, 6-9
79642	2-159, 2-161
79644	3-97, 3-99
79646	3-97, 3-99
79647	3-97, 3-99
79648	2-191
79670	2-7
79671	2-7
79674	3-97, 3-99
79680	2-7
79708	4-5, 4-15
79711	4-38, 4-39, 4-43
79719	4-39, 4-43
79728	4-39, 4-43
79731	4-38, 4-43
79739	4-38, 4-43
79740	4-38, 4-39, 4-43
79742	4-3, 4-7, 4-13, 4-17
79747	4-3, 4-7, 4-13, 4-17
79748	4-5, 4-9, 4-15, 4-19
79749	4-5, 4-9, 4-15, 4-19
79750	4-5, 4-9, 4-15, 4-19
79751	4-5, 4-9, 4-15, 4-19
79752	4-5, 4-9, 4-15, 4-19
79753	4-5, 4-9, 4-15, 4-19
79754	4-11
79755	4-11, 4-21
79756	4-11, 4-21
79757	4-11, 4-21
79758	4-11, 4-21
79759	4-11
79760	4-11, 4-21
79761	4-11, 4-21
79762	4-11, 4-21
79763	4-11, 4-21
79764	4-11, 4-21
79765	4-11, 4-21
79766	4-11, 4-21
79767	4-11, 4-21
79771	4-3, 4-13
79772	4-21
79774	4-21
79776	4-11, 4-21
79777	4-21
79779	4-3, 4-7, 4-13, 4-17
79781	2-171, 3-45, 4-33
79782	4-33
79786	4-41
79787	4-41
79788	4-41
79789	4-41
79790	4-41
79791	4-41
79792	4-41
79793	4-41
79794	4-41
79795	4-41
79797	4-41
79798	4-41
79799	4-41
79812	4-41
79820	4-41
79822	4-41
79823	4-41
79824	4-41
79872	2-145
79956	5-9, 6-9
79957	5-9, 6-9
79960	5-9, 6-9
79961	5-9, 6-9
79962	5-9, 6-9
79963	5-9, 6-9
79964	5-9, 6-9
79965	5-9, 6-9
79966	5-9, 6-9
79967	5-9, 6-9
79969	5-9, 6-9
79970	5-9, 6-9
79972	5-15, 6-15
79973	5-15, 6-15
79974	5-15, 6-15
79975	5-23, 6-23
79976	5-15, 6-15
80392	2-187
80395	2-175, 3-41
82063	3-3, 3-7, 3-19
82168	2-153
82200	3-11, 3-15, 3-23
82509	2-113
82510	2-113
82661	2-103, 2-105, 2-109
82727	2-19, 4-63, 4-65
82731	2-41
82733	2-187
82739	2-39, 3-109
82820	2-159, 2-161
82825	2-31
82830	2-155, 2-163, 2-165
82832	2-145
82835	2-159, 2-161
82839	2-153
82843	2-159, 2-161
82962	3-97, 3-99
83547	2-35
83548	2-35
83549	2-25
83551	2-25
83553	2-25, 2-27
83554	2-25, 2-27
83555	2-27
83557	3-38
83578	2-61, 2-71, 2-73
83580	2-61, 2-71, 2-73
83581	2-53, 2-55
83584	2-95, 2-97, 2-99, 2-101
83591	2-115
83618	2-31
83620	2-35
83622	2-35
83626	3-38
83627	3-38
83639	2-61
83640	2-69
83641	3-91
83643	2-111
83644	2-111
83652	2-41
83664	2-41
83669	5-17, 6-17
83673	2-43
83674	2-43, 2-45, 2-47, 2-49
83677	5-24, 6-24
83678	2-61
83679	2-69
83682	2-61, 2-69
83683	2-61, 2-69
83684	2-61, 2-69
83685	2-61, 2-69
83686	2-61, 2-69
83689	2-43
83690	2-127, 2-129
83691	2-127
83692	2-41
83693	2-211
83695	2-212
83699	3-48
83706	3-109
83707	5-24
83729	2-41
83731	2-41
83732	5-24, 6-24
83747	2-41
83750	2-41
83853	2-41
84014	2-167, 4-43
84015	2-187, 3-45, 4-38
84016	2-175, 3-41, 4-39
84103	2-153
84581	2-171, 3-45
84659	5-17, 6-17
84875	5-3
84876	5-3
84877	5-3
84878	5-3, 6-3
84879	5-3, 6-3
84880	5-3, 6-3
84882	5-3, 5-24, 6-3, 6-24
84883	2-4, 5-3, 6-3
84884	5-3, 6-3
84885	5-5
84886	5-5
84887	5-5, 6-5

Part Number	Page Number
84888	5-5
84889	5-5, 5-11, 6-5, 6-11
84891	5-5, 6-5
84892	5-5
84893	5-5
84894	5-5
84895	5-7, 6-7
84896	5-7, 6-5, 6-7
84897	5-7, 6-7
84898	5-7, 6-7
84899	5-7, 6-7
84900	5-7, 6-7
84901	5-7, 6-7
84902	5-7, 6-7
84903	5-7, 6-7
84904	5-7, 6-7
84905	5-7, 6-7
84906	5-7, 6-7
84907	5-6, 6-6
84910	5-6, 6-6
84911	5-22
84913	5-22
84914	5-22
84915	5-19, 6-19
84916	5-19, 6-19
84917	5-19, 6-19
84919	5-19, 6-19
84921	5-19, 6-19
84923	5-13
84924	5-13, 6-13
84925	5-13, 6-13
84926	5-13, 6-13
84927	5-13, 6-13
84936	5-19, 6-19
84947	5-13
84950	5-21, 6-21
84951	5-21, 6-21
84952	5-21, 6-21
84953	5-21, 6-21
84954	5-21, 6-21
84955	5-21, 6-21
84956	5-21, 6-21
84957	5-21, 6-21
84958	5-21, 6-5, 6-21
84961	5-21, 6-21
84962	5-3, 6-3
84963	5-11, 6-11
84964	5-11, 6-11
84965	5-11, 6-11
84966	5-11, 6-11
84967	5-11, 6-11
84968	5-11
84969	5-11, 6-11
84970	5-11, 6-11
84971	5-11, 6-11
84972	5-11
84973	5-11, 6-11
84974	5-11, 6-11
84975	5-11, 6-11
84976	5-11, 6-11
84977	5-11, 6-11
84978	5-11, 5-19, 6-11, 6-19
84979	5-11, 6-11
84980	5-11
84981	5-11, 6-11
84982	5-23, 6-23
84983	5-5, 5-23, 6-5, 6-23
84984	5-23, 6-23
84985	5-15, 6-15
84987	5-23, 6-23
84988	5-23, 6-23
84989	5-23, 6-23
84990	5-15, 6-15
84991	5-15, 6-5, 6-15
84992	5-15, 6-15
84993	5-23, 6-23
84994	5-23, 6-23
84995	5-15, 6-15
84996	5-15, 6-15
84997	5-15, 6-15
84998	5-23, 6-23
84999	5-9, 6-9
86034	2-151
86041	2-41
86328	2-113
86798	2-7
86824	2-63
86860	2-7
86877	2-240
86953	2-153
87308	2-67, 2-87, 2-89
87337	3-107
87396	2-111, 2-113, 2-115, 2-117
87515	2-7
87536	2-191
87579	4-59, 4-61, 4-63, 4-65
87583	2-192
87631	2-179
87866	2-191
87948	3-31
87972	2-135
9000355	2-117
9000360	2-131
9000823	4-71
9001070	2-135, 2-137
9001183	2-135
9001293	2-153
9001554	2-137, 2-139
9001702	4-45
9002915	3-95
9003391	2-87
9003676	5-24
9003927	3-114
9004327	2-23
9004539	2-80
9006583	7-5
9006584	7-5
9006585	7-5
9006586	2-4, 7-3
9006587	7-5
9006588	7-5
9006589	2-67, 2-83, 2-87
9006591	2-63, 2-67
9006592	2-115, 2-117
9006618	2-87
9006620	2-89
9006633	2-59
9006635	2-59
9006741	2-139
9007131	3-27, 3-29
9007380	2-89
9007423	2-87
9007651	3-55
9008193	2-89
9008194	2-67, 2-87
9008645	2-145, 2-155, 2-159, 2-161
9008799	2-67, 2-87
9008800	2-67, 2-87
9008801	2-67, 2-87
9008802	2-67, 2-87
9008803	2-87
9008804	2-89
9008805	2-89
9008806	2-87
9008807	2-87
9008808	2-87
9008809	2-89
9009006	4-49
9009657	7-11
9010259	2-50
9010634	2-87
9012095	2-187
9012853	3-21
9012854	3-25
9012855	3-9
9012856	3-17
9012857	2-13
9012859	2-153
9012869	3-59
9012871	2-13
9012874	2-153
9012878	3-99
9012879	2-23
9012880	3-35
9012884	3-39
9012885	3-13
9012886	3-5
9012887	3-55
9012889	3-103
9012890	3-29
9012891	3-53
9012892	3-37
9012893	3-71
9012896	3-87
9012898	4-57
9012899	4-51

Part Number	Page Number
9013665	2-145
9013902	2-50
9013903	2-49
9013904	2-50
9014941	7-5

PART DESCRIPTION TO PAGE NUMBER CROSS REFERENCE LIST

A

A/C Hose #6 134A, 4-59, 4-61
A/C Hose#10 134A, 4-59, 4-61
Actuator, Govnr, Gas/Lpg, 2-61, 2-69
Actuator, Valve En, 4-5, 4-9, 4-15, 4-19
Adapter Kit, Manifold, 2-63
Adapter, Air-Intk, Carb, Gas, 2-61
Adapter, Air-Intk, Gas/Lpg, 2-45, 2-47
Adapter, Fltr, Remote, 2-59
Adapter, Intake, Lpg [3.0l], 2-79
Adapter, Mtg, Carb [Ford 2.3], 2-61, 2-69
Adapter, Pump, Water, Mach, 2-41
Adapter, Throttle Body, 2-79
Adapter, Valve, 400mm [Bosch], 2-83, 2-87
Adapter, Valve, Fuel Trim, 2-79
Adaptor Wldt, Vac Wand, 3-97, 3-99
Adaptor, Fuelline, 2-115
Adaptor,Neutral En, 4-21
Adjuster, Manual, 4-67, 4-69
Alarm Assy, Backup, 12/48vdc, 3-27, 3-29
Alarm Kit, Backup / A/V, Ci [800gray], 3-29
Alternator, 3-91
Alternator Kit, Hd, Gas/Lpg, Ci[800/810], 3-95
Alternator, 12vdc 050a Sealed Brush, 2-41
Alternator, 12vdc, 075a [Valeo], 2-53, 2-55, 2-57
Alternator, 12vdc, 100A [Brushless], 3-75, 3-93
Alternator, Se [800/810, 07], 3-79, 3-95
Angle, 3-97, 3-99
Angle, Bolt, Latch, 2-21, 2-23
Angle, Bolt, Latch [800 Gray], 2-23
Angle, Heat, Shield, 3-75, 3-93
Angle, Mtg, 2-33, 2-119, 2-121, 2-123, 2-125
Angle, Mtg, .12 X 1 X 1 X 4.5l, 2-73
Angle, Mtg, .19 1.00 X 1.00 48.4l 6/.30h, 2-29
Angle, Mtg, Stl, .12 1.2 1.0 00.8l, 2-41
Angle, Shield, Heat, 2-55
Arm Kit, 7-3
Arm Wldt, M Br, Idler, 2-179
Arm Wldt, M Br, Motor, 2-179
Arm Wldt, Pivot, Side Brush, 2-173
Arm Wldt, Pivot, Side Brush [800 Gray], 2-173
Arm Wldt, Safety, Sppt, Seat, .38d 10.1l, 2-15
Arm, Adj, Alternator, 2-53, 2-55
Arm, Adj, Alternator, 5.0r [Curved], 2-41
Arm, Adj, Alternator, Hd [800/810 07], 3-79, 3-95
Arm, Adjmt, Alternator, 2-57
Arm, Alternator, Hd [Gm3.0l], 3-75, 3-93
Arm, Cntrl, Pintle, 2-153
Arm, Control En, 4-3, 4-7, 4-13, 4-17
Arm, Lift, Hppr, Lower, 2-25
Arm, Lift, Hppr, W/ Label [800l], 2-25
Arm, Safety, Hppr, W/ Label [800], 2-25
Arm, Safety, Sppt, Cover, Eng, .31d 14.5, 2-17
Arm, Tens, 3-75
Arm, Tens [2008], 3-79
Arm, Tension, A/C, .18 1.3w 4.2l, 3-75
Arm, Wiper, Windshield, 4-47
Arm.Thr.Ball, 5-9, 6-9
Armature, 5-9, 6-9
Armrest, Black, 4-49, 4-51

B

Backing Plate Rh, 4-67
Backplate S/A En, 4-5, 4-9, 4-15, 4-19
Baffle, 5-3, 6-3
Balancer, 7-11
Ball, 4-27, 4-29, 7-3
Ball En, 4-21
Ball Joint .375-24, 3-97, 3-99
Balljoint .375-24 Lh, 3-97, 3-99
Balljoint, Rod End, 2-145
Band,Mtg., 2-91, 2-93, 2-95, 2-99
Bar Kit, Shakr, F/64374, Replmt, 2-37
Bar Wldt, Brush Pressure, 2-179
Bar, Equalizer, 2-151
Bar, Flat, Stl 0.18, 01.00 X 15.0l, 2-17
Bar, Hex, Stl 0.63, 00.88 .25-28, 2-153
Bar, Prop, 3-97, 3-99
Bar, Shakr Stem, 2-37
Bar, Sppt, Eng Cover, 2-19
Bar, Stl, 0.12, 01.00 X 08.32l[800 Gray], 2-13
Battery, 12V, Wet, 2-141
Battery, Wet, 12vdc 1000cca, 2-143
Bearing, 2-175, 3-41, 3-47, 4-3, 4-5, 4-7, 4-9, 4-13, 4-15, 4-17, 4-19, 4-32, 5-9, 5-22, 6-9, 6-22
Bearing Cam,, 5-6, 6-6
Bearing Kit, 7-7, 7-12
Bearing Kit, .001 U.S., 7-7
Bearing Kit, .001" #1, 2, 3, 4, 7-11
Bearing Kit, .001" #5, 7-11
Bearing Kit, .010" #1, 2, 3, 4, 7-11
Bearing Kit, .020" #1, 2, 3, 4, 7-11
Bearing Kit, .025" #5, 7-11
Bearing Kit, .030" #1, 2, 3, 4, 7-11
Bearing Kit, Cshft, .010[F2.3/2.5l], 5-13, 6-13
Bearing Kit, Cshft, .020[F2.3/2.5l], 5-13, 6-13
Bearing Kit, Cshft, .030[F2.3/2.5l], 5-13, 6-13
Bearing Kit, Cshft, .040[F2.3/2.5l], 5-13, 6-13
Bearing Kit, Cshft, Std[F2.3/2.5l], 5-13, 6-13
Bearing Kit, Std, 7-7
Bearing Kit, Std #1, 2, 3, 4, 7-11
Bearing Kit, Std #5, 7-11
Bearing Thrust, 4-33
Bearing-Ball,1.38B 2.83D 0.67W, 2-179
Bearing-Cone, 1.38Bore 0.72Wth, 2-147
Bearing-Cone, 1.50Bore 0.75Wth, 2-147
Bearing-Cone, 2.63Bore 0.87Wth, 2-145
Bearing-Cup , 4.33Dia 0.74Wth, 2-145
Bearing-Cup, 2.56Dia 0.55Wth, 2-147
Bearing-Cup, 2.72Dia 0.59Wth, 2-147
Bearing-Flange,2 Hole 0.50Bore, 2-189
Bearing, .016 Camshaft, 5-6, 6-6
Bearing, Ball, 0.67b 1.57d 0.47w, 2-41
Bearing, Flange .500B, 2-189
Bearing, Flange .625 Bore, 3-97, 3-99
Bearing, Flange .875 Bore, 3-47
Bearing, Needle, 4-37
Bearing, Needle, 1.13b 1.38d 0.75w, 2-37
Bearing, Nylon, 3-109
Bearing&Clr ,1.25B 2.44D 1.41W, 2-179
Bell Crank, 4-11
Bell Crank En, 4-21
Bellcrank Wldt, Pivot, Dir Cntrl, 2-153
Belt, Seat, 3-107
Belt, V, 3-91
Belt, V, [3v] 38.5l [Hc38/41], 3-76
Belt, V, [3v] 40.0l, 1only [Hc38], 3-75
Belt, V, [Hc41] 42.0l, 3-75, 3-93
Belt, V, 38.5l [Hc38], 3-79
Belt, V, 39.6l [3v, Hc41], 2-55, 2-57
Belt, V, 40.0l [3v, 1, 2-53
Belt, V, 45.1l [Hc38], 3-79, 3-95
Belt, V, 46.4l, Cogged [Hc38], 2-41
Belt, V, Hc41 40.1L, 3-67
Belt, V, Hc41 41.1L, 3-67
Blade, Deflector, 2-4
Blade, Wiper, Windshield, 4-47
Block, 3-41
Block Assy, 5-3, 6-3
Blower, Heat/Ac, 4-59, 4-61, 4-63, 4-65
Body, 4-25
Body Assembly, 4-23
Body Assy, 4-23
Bolt, 2-63, 2-65, 2-75, 2-79, 4-27, 4-29, 5-17, 5-19, 6-19, 7-3, 7-5, 7-7, 7-9, 7-11, 7-12
Bolt (1/4-20x.62), 7-9
Bolt (5/16-18x5/8), 7-9
Bolt (1/4-20x1/12 Hex), 7-12
Bolt (1/4-20x1/12), 7-12
Bolt (1/4-20x1/2), 7-9
Bolt (5/16-18x1.5 Hex), 7-12
Bolt M12, 5-3, 5-6, 6-3, 6-6
Bolt M12X45, 5-19, 6-19
Bolt-Conrod-4, 5-22, 6-22
Bolt-Eye M8-1.25, 3-47
Bolt-Thru, 5-9, 6-9
Bolt, (HFH3/8-16x062 280 POR), 7-5
Bolt, Carriage, .38-16 X 1.00, 2-179
Bolt, Clutch, 2-45, 2-47, 2-49
Bolt, Eye, Lift, 2-47
Bolt, Eye, M8 X 1.25 X 051mm, 05.50 Eye, 2-173

Bolt, Intake Manifold, 2-63, 2-65, 2-75, 2-80
Bolt, Latch, F/58489/58844, 2-9, 2-11
Bolt, M6X16.5mm, 5-3, 6-3
Bolt, M8 X 17 Schd, 5-7, 6-7
Bolt, M8X12.0mm, 5-23, 6-23
Bolt, Motor, Hyd, 4-31
Bolt, Shld, .50d X 0.50, .38-16, 2-7, 2-171, 3-45
Bolt, Shld, .50d X 1.00, .38-16, 2-37
Bolt, Starter, 2-45, 2-47, 2-49
Bolt, U, .25-20 X 2.00, 1.10id, 3-65, 3-73, 3-83, 3-89
Bolt,M10X40.0mm, 5-11, 6-11
Bolt,M10X55.0M, 5-15, 6-15
Bolt,M10X58.0mm, 6-17
Bolt,M14X55.0M, 5-13, 6-13
Bolt,M5X20.0M, 5-11, 6-11
Bolt,M6X27.5mm, 5-11, 6-11
Bolt,M6X37.5mm, 5-7, 6-7
Bolt,M6X47.5mm, 5-11, 6-11
Bolt,M6X52.5mm, 5-11, 6-11
Bolt,M8X18.0M, 5-23, 6-23
Bolt,M8X20.0mm, 5-11, 6-11
Bolt,M8X25.0mm, 5-15, 6-15
Bolt,M8X53.0mm, 5-23, 6-23
Bolt,Tens.Sprn, 5-19, 6-19
Boot, 2-189
Boot- Circuit Breaker, 2-192
Boot, 90deg .44id 0.62id 1.69l, Blk, 3-31
Boot, Bar, Shakr, Fltr [800l], 2-37
Boot, Circuit Breaker, 3-55
Boot, Circuitbreaker, 2-192, 3-55
Boot, Str, 0.12id 0.43id 0.25l, Blk, 2-41, 2-53, 2-55, 2-57
Boot, Switch, 2-191
Boot, Switch, Ignition, 2-191
Box Assy, Heat, 4-63
Box Assy, Heat/Ac, 4-59
Box Assy, Heater, A/C (See Breakdowns), 3-63, 3-69, 3-81, 3-85
Box, Mounting, Lever, Vac, 3-97, 3-99
Brace Wldt, Bmpr, Se [800 Gray], 3-39
Brace Wldt, Bumper, Se, 3-38
Bracket, 3-3, 3-7, 3-11, 3-15, 3-27, 3-101, 3-103, 7-3, 7-9
Bracket [Epr], 2-83
Bracket Kit, Mtg, Cable, Replmt[800/810], 2-153
Bracket Wldt, 3-101
Bracket Wldt, Fan Inlet, 2-185
Bracket Wldt, Gasspring, 2-17
Bracket Wldt, Lift, 3-47
Bracket Wldt, Lift [Gray], 3-47
Bracket Wldt, Mtg, A/C, 3-75
Bracket Wldt, Mtg, A/C [800 07], 3-79
Bracket Wldt, Mtg, Alternator, 2-41
Bracket Wldt, Mtg, Battery, 2-143
Bracket Wldt, Mtg, Battery [800 G/Lp/D], 2-143
Bracket Wldt, Mtg, Eng, 2-43
Bracket Wldt, Mtg, Eng, Front, Rh, 2-43, 2-45, 2-47, 2-49
Bracket Wldt, Mtg, Eng, Rear, 2-43, 2-45, 2-47, 2-49
Bracket Wldt, Mtg, Eng, Rear [2.3ford], 2-43
Bracket Wldt, Mtg, Guard, Side Brush, 2-173
Bracket Wldt, Mtg, Headlight, 2-33, 2-35
Bracket Wldt, Mtg, Headlight [800 B/Gr], 2-33
Bracket Wldt, Mtg, Ignition Coil [Ford], 2-41
Bracket Wldt, Mtg, Motor, 2-139, 2-171
Bracket Wldt, Mtg, Motor [2007], 2-139
Bracket Wldt, Mtg, Motor [Gray], 3-45
Bracket Wldt, Mtg, Motor[800 Gray], 2-171
Bracket Wldt, Mtg, Propel Cable, 2-153
Bracket Wldt, Mtg, Skirt, Sbdc[800 Gray], 3-103
Bracket Wldt, Mtg, Valve, 2-169
Bracket Wldt, Oprtr Station, 2-13
Bracket Wldt, Pivot, 3-47
Bracket Wldt, Pivot [Gray], 3-47
Bracket Wldt, Pivot, Side Brush, 2-173
Bracket Wldt, Pivot, Side Brush [Gray], 2-173
Bracket Wldt, Spring, 2-173
Bracket Wldt, Spring [800 Gray], 2-173
Bracket Wldt, Steering Tilt, 2-189
Bracket Wldt, Tank, Lpg, 2-119, 2-121, 2-123, 2-125
Bracket, Bottom, 7-5
Bracket, Adjuster, Brake, 2-151
Bracket, Angle, 2-185, 3-41, 3-47, 3-51
Bracket, Angle [Gray], 3-29, 3-53
Bracket, Angle, Mtg, Guard, Side Brush, 3-47
Bracket, Angle, Mtg, Side Brush, 2-173
Bracket, Angle, Sppt, Hood, 2-19
Bracket, Arm, Steering, 2-145
Bracket, Battery, 2-141
Bracket, Belt, Guard, A/C, 3-75
Bracket, Belt, Guard, Ac, 3-67
Bracket, Box, Relay, 2-67, 2-83, 2-87
Bracket, Brace, Cntr, 2-17
Bracket, Brush Lift, Main, 2-181
Bracket, Channel, Mtg [800 Gray], 3-47
Bracket, Eng, 2-141
Bracket, Flasher, 3-31
Bracket, Fltr, Fuel, 2-115
Bracket, Fltr, Lpg [6600], 2-75
Bracket, Frame, 1.0 X 3.50w, 2-7
Bracket, Guard, Alternator, Hd [800/810], 3-79, 3-95
Bracket, Guard, Alternator, Hd [Gm3.0l], 2-57, 3-75, 3-93
Bracket, Guide, Arm, Side Brush, Rh, 2-173
Bracket, Hinge, Door, Lpg [800 Gray], 2-7
Bracket, Isolator, 2-107
Bracket, L, 2.20,2.00, .18T,1., 2-135, 2-137, 2-139
Bracket, Latch, Sppt, 4-49, 4-51
Bracket, Mirror, Mtg, 3-57
Bracket, Mounting, 2-167
Bracket, Mounting Motor, 2-187
Bracket, Mounting, Gearmotor, 3-109
Bracket, Mounting, Motor, 3-45
Bracket, Mounting, Skirt, 3-101, 3-103
Bracket, Mtg, Alternator, Hd,[Gm3.0l], 3-75
Bracket, Mtg, Alternator, Hd[800/810 07], 3-79, 3-95
Bracket, Mtg, Alternator, Lower [Gm3.0l], 2-53, 2-55, 2-57
Bracket, Mtg, Alternator, Lower,[Gm3.0l], 3-93
Bracket, Mtg, Battery, 2-141
Bracket, Mtg, Eng, Front, Rh [Ford], 2-43
Bracket, Mtg, Eng, Lh, 2-45, 2-47, 2-49
Bracket, Mtg, Eng, Rear, Lh, 2-43, 2-45, 2-47, 2-49
Bracket, Mtg, Eng, Rear, Rh, Dsl, 2-43, 2-45, 2-47, 2-49
Bracket, Mtg, Eng, Rh, 2-45, 2-47, 2-49
Bracket, Mtg, Fltr, Oil, W/ Label [800l], 2-135
Bracket, Mtg, Fltr, Oil, W/Label [800l], 2-135, 2-137, 2-139
Bracket, Mtg, Ftg, 2-31
Bracket, Mtg, Fuelline, 2-113
Bracket, Mtg, Govnr, 2-61, 2-69
Bracket, Mtg, Heat Shield, 2-107, 2-109
Bracket, Mtg, Ignition Module, 2-41
Bracket, Mtg, Isolator, 2-107
Bracket, Mtg, Isolator [800/810 07], 2-109
Bracket, Mtg, Isolator [Gm3.0l 2010], 2-89
Bracket, Mtg, Light [800 Gray], 3-5, 3-13
Bracket, Mtg, Light, Rotating, 3-7, 3-15
Bracket, Mtg, Light, Rotating [800 Gray], 3-9, 3-17
Bracket, Mtg, Lower, Light, Revl/Flsh, 3-5, 3-13
Bracket, Mtg, Mirror, 3-57
Bracket, Mtg, Mirror [800 Gray], 3-59
Bracket, Mtg, Mirror, Rearview[800 Gray], 3-59
Bracket, Mtg, Ohg, 3-33
Bracket, Mtg, Ohg [800 Gray], 3-35
Bracket, Mtg, Propel Cable, 2-153
Bracket, Mtg, Side Panl Lh [800l], 2-33
Bracket, Mtg, Side Panl Rh [800l], 2-33
Bracket, Mtg, Skirt, 2-29
Bracket, Mtg, Tank, Coolant F/87972, 2-135
Bracket, Mtg, Valve, 2-187
Bracket, Mtg, Valve, Cntrl, Heater, 3-65, 3-73, 3-83, 3-89
Bracket, Mtg, Valve,Control, Heater, 3-65, 3-83
Bracket, Mtg, Vaporizer, 2-71
Bracket, Pivot, Hinge, Door, Lpg, 2-7
Bracket, Pump, Fuel, 2-111, 2-113, 2-115
Bracket, Retainer, Battery, 2-143
Bracket, Retainer, Battery [800 G/Lp/D], 2-143
Bracket, Side Brush, Valve, 3-41

Bracket, Spring, 3-47
Bracket, Spring [Gray], 3-47
Bracket, Stand-Off, Fltr, Air, 2-97, 2-101
Bracket, Stand-Off, Fltr, Air [800 B/Gr], 2-97, 2-101
Bracket, Starter, 2-45, 2-47, 2-49
Bracket, Steering, Machining, 2-145
Bracket, Steering, Machining (Replaced by 375534), 2-145
Bracket, Tail Pipe, 2-103, 2-105, 2-107
Bracket, Tailpipe, 2-107
Bracket, Tailpipe [800/810 2007], 2-109
Bracket, Top, 7-5
Bracket,A/C Dryer, 4-55, 4-57
Brake Assy, Drum, Hyd, 08.0d 1.6w Lh, 4-69
Brake Assy, Drum, Hyd, 08.8d 1.6w Rh, 4-67
Brake Assy, Lh (See Breakdowns), 2-147
Brake Assy, Rh (See Breakdowns), 2-147
Breaker-Circuit, 2.5 Resetbl, 2-192
Breaker-Circuit, 15 Resetbl, 2-192
Breaker-Circuit, 15 Resetable, 3-55
Breather Cap, 5-21, 6-21
Breather Cap and Gasket, 2-163
Breather, Hyd, 2-163
Breather, Hyd 40Mic NO DS, 2-4
Brg-Conn.Rod, 5-22
Brkt,Mtg,Htr Coil, 4-63, 4-65
Brush Holder, 5-9, 6-9
Brush-Outsd -Polypropylene, 2-5
Brush-Patrl -Nylon, 2-5
Brush-Side Swp -Assy-Nylon, 2-5
Brush-Side Swp -Assy-Polypropylene, 2-5
Brush-Side Swp -Nylon, 2-5
Brush-Side Swp -Polypropylene, 2-5
Brush-Side Swp -Assy-Flat Wire, 2-5
Brush-Side Swp -Flat Wire, 2-5
Brush-Sweep -Nylon (24SR), 2-5
Brush-Sweep -Nylon (8DR), 2-5
Brush-Sweep -Polypropylene, 2-5
Brush-Sweep -Polypropylene&Wire, 2-5
Brush-Sweep -Wire, 2-5
Brush, Swp, Wedge, Polypropylene, 2-5
Bshg,Flange,0.62Bx0.68Od,Nylon, 3-57, 3-59
Bulb, 3-19, 3-23
Bulb, #194, 3-31
Bulb, 12V, 3-3, 3-7, 3-11, 3-15
Bumper Assy, Se, 3-38
Bumper Kit, Se, Ci [800l Gray], 3-39
Bumper Wldt, Lh, 2-35
Bumper Wldt, Lh [800 Gray], 2-35
Bumper Wldt, Rear, Gas/Dsl, 2-7
Bumper Wldt, Rear, Gas/Dsl [800 Gray], 2-7
Bumper Wldt, Rear, Lpg, 2-7
Bumper Wldt, Rear, Lpg [800 Gray], 2-7
Bumper Wldt, Rh, 2-35
Bumper Wldt, Rh [800 Gray], 2-35, 3-39
Bumper Wldt, Se, Lh, Front [Gray], 3-39
Bumper Wldt, Se, Rh, Front, 3-38
Bumper Wldt, Se, Rh, Front [Gray], 3-39
Bumper Wldt, Sppt, Hppr, Lh, 2-35
Bumper Wldt, Sppt, Hppr, Rh, 2-35
Bumper Wldt,Se, Lh, Front, 3-38
Bumper, Corner, Mach, 2-7
Bumper, Corner, Mach [800 Gray], 2-7
Bumper, Cover, Hppr, 2-33
Bumper, Rbr, 0.6d 0.34th 0.3d Tip, 2-19, 2-33
Bumper, Rbr, 1.5d 1.50th 0.28h, 2-21, 2-23
Bumper, Rbr, 2.0d 0.75th .38-16, 2-13
Bumper, Rbr, Adh, 0.50d 0.14th, 4-47
Bumper, Rubber, 3-7, 3-15, 3-55
Bushing En, 4-7, 4-17
Bushing En, 4-5, 4-9, 4-15, 4-19, 4-41
Bushing, Flng, 0.50b 0.56d 0.22l, Nyl, 2-169
Bushing, Flng, 0.50b 0.59d 0.38l, 2-173
Bushing, Flng, 0.63b 0.72d 0.25l, 2-33
Bushing, Isolator, 2-135, 2-137, 2-139, 2-185
Bushing, Rubber, 2-91, 2-93, 2-95, 2-99
Bushing, Seal, 4-37
Bushing, Sleeve, .40b X .50d X 1.06l, 3-75
Bushing, Sleeve, 0.50b 0.59d 0.50l, Bnz, 2-37
Bushing, Sleeve, 0.62b 0.72d 0.50l, Fgl, 2-153
Bushing, Sleeve, 1.00b 1.25d 0.49l, Fgl, 2-31
Bushing, Sleeve, 1.25b 1.40d 0.38l, Bnz, 2-173
Bushing, Sleeve, 1.25b 1.40d 1.00l, Fgl, 2-27
Bushing, Sleeve, 1.25b 1.41d 1.00l, Tef, 2-25, 2-27
Bushing, Sleeve, 1.51b 1.66d 1.00l, Tef, 2-25
Bushing, Snap-In, 0.31b 0.41d 0.14th Nyl, 2-33
Button, Plug 1.25H, 2-192
Button, Plug, 0.50h .03-.12 [Black Nyl], 3-81, 3-85, 3-87

C

Cab Assy, Oprtr [800 Gray], 3-55
Cab Assy, Oprtr [800] (See Breakdowns), 3-55
Cab Wldt [800 Gray], 4-47
Cab Wldt, 800, 4-47
Cable, 3-45
Cable Assy-Batt,Pos, 48.0, 2Ga, 2-141
Cable Kit, Brush, Side, Lh, Ci [800l], 3-45
Cable Kit, Brush, Side, Rh, Ci [800l], 2-171
Cable Tie Mount, 3-3, 3-5, 3-7, 3-9, 3-11, 3-13, 3-15, 3-17
Cable, 06ga 13.0l Blk, 2-43, 2-45, 2-47, 2-49
Cable, Battery, 02ga 36.0l Blk .38ring, 2-143
Cable, Battery, 02ga 48.0l Red .41ring, 2-143
Cable, Brake, Park, 2-151
Cable, Cntrl, Choke, 67.1l, Knob, 2-61
Cable, Cntrl, Choke, 85/90l 1.4d Knob, 3-65, 3-73, 3-83, 3-89
Cable, Glv .13d 021.0l 330eye /330eye, 2-19
Cable, Glv .19d 020.3l .44ball /.50eye, 2-171
Cable, Glv .25d 016.8l .64eye /.64eye, 2-175, 3-41
Cable, Glv .25d 021.2l .63eye /.63eye, 2-175, 3-41
Cable, Lift, Main Brush, 2-181
Cable, Pull, .09d 18.3l .25eye /.25-28, 2-153
Cable, Push / Pull, 096.0l .25-28/.25-28, 2-153
Cabletie Mount, Adhesive, 3-19, 3-21, 3-23, 3-25
Cam Wldt, Limiter, Spd, 2-153
Camplate S/A En, 4-3, 4-7, 4-13, 4-17
Camsft.Sensor, 5-11
Camshaft, 5-19, 6-19, 7-12
Camshft Sprckt, 5-19, 6-19
Cap, 7-12
Cap Assembly En, 4-41
Cap Screw, 4-33
Cap Screw En, 4-3, 4-7, 4-13, 4-17
Cap, Cyl Assy, Master Brake, 2-151
Cap, Distributor, 7-5
Cap, End, 4-37
Cap, Fuel, 2-111
Cap, Fuel, Tank, 2-117
Cap, Grease Black Paint, 2-147
Cap, Oil Filler, 7-3
Cap, Radiator, 14psi [Stant], 2-135, 2-137, 2-139
Cap, Screw, 4-37
Cap, Tank, Fuel, 2.3neck 2.6d, 2-113, 2-115
Cap, Valve Spring, 7-3
Cap, Valve Stem, 2-149
Cap, Vinyl, 2.26 Id X 12.7lg, Blk, 2-41
Cap, Wheel, Steering, 2-189
Carb Kit, Repair, 2-69
Carburetor, Gas [F/ Lrg-423, Vent, Ze], 2-61
Carburetor, Gas [F/ Lrg-425, Vent, Ze], 2-61
Carburetor, Lpg [F/ Lrg-423, W/ Gasket], 2-69
Cart Flow Control CP, 4-43
Cart, Check Valve CP, 4-43
Cart, Pilot Cntr, 4-39
Cart, PSI CN CP, 4-43
Chain, Coil, Str, 2/0, 09.0l 07 Link, 2-7
Chain, Jack, #12, 08.5l 11 Links, 3-97, 3-99
Chain, Link#2/0, 7Links, 2-4
Chain, Sash, 35, 06.0l 11 Link, 2-7
Channel Wldt, Mtg, 2-7

Channel Wldt, Mtg, Eng, Rear, 2-43, 2-45, 2-47, 2-49
Channel, .12, 1.5w 0.5 49.5l, 5/0.4h, 2-7
Channel, Mtg, Fan Motor, 2-135, 2-137
Channel, Mtg, Steering Latch, 2-189
Channel, Retainer, 2-4, 2-145
Channel, Retainer, Seal, Rear, 2-4
Channel, Seal, Wndw, 4-47, 4-49, 4-51
Charge Pmp Adap En, 4-5, 4-9, 4-15, 4-19
Check Valve, 100 Psi, 3-45
Circuitbreaker, 20.0a, Thermal, 3-63, 3-69, 3-71, 3-81, 3-85, 3-87
Circuitbreaker, 15.0a, Resetable, 3-109
Circuitbreaker, 15A, Resetable, 3-55
Circuitbreaker, 15A, Restable, 2-192
Circuitbreaker, 2.5A, Restable, 2-192
Clamp, 2-63, 7-5, 7-12
Clamp-Cable, 0.25Dia 0.56Wth, 2-151, 3-109
Clamp-Cable, 0.38Dia 0.38Wth, 3-97, 3-99
Clamp-Cable, 0.38Dia 0.62Wth, 2-111
Clamp-Muffler,For 1.87 Od Tube, 2-103, 2-105
Clamp-Muffler,For 2.00 Od Tube, 2-103, 2-105
Clamp-Wormdrive, 0.81- 1.50D, 3-31
Clamp-Wormdrive, 1.06- 2.00D, 2-127
Clamp-Wormdrive, 1.62- 3.50D, 2-91, 2-93, 2-95, 2-99
Clamp-Wormdrive, 2.63- 4.50D, 2-185
Clamp-Wormdrive, 3.62- 5.50D, 2-185
Clamp, Cable, 2-145
Clamp, Cable- Brake, 2-151
Clamp, Cable, Stl, 0.18d X 0.75w, 1hole, 3-65, 3-73, 3-83, 3-89
Clamp, Cable, Stl, 0.38d X 0.62w, 1h, 2-113, 2-115
Clamp, Cable, Stl, 0.44d X 0.62w, 1hole, 2-39
Clamp, Cable, Stl, 0.69d X 0.62w, 1hole, 2-27, 2-123, 2-125
Clamp, Cable, Stl, 0.9x1.8x0.62w, 1h, 2-115
Clamp, Cable, Stl, 1.00d X 0.75w, 1h, 2-167, 2-185
Clamp, Cable, Stl, 1.00d X 0.75w, 1hole, 2-50
Clamp, Cable, Stl, 1.0x2.0x0.62w, 1hole, 2-143, 2-171, 3-45
Clamp, Cable, Stl, 1.25d X 1.00w, 1hole, 2-17, 2-59
Clamp, Cable, Stl, 1.50d X 0.75w, 1h, 2-113
Clamp, Cable, Stl, 1.75d X 1.00w, 1h, 2-129, 2-131
Clamp, Cable, Stl, 1.75d X 1.00w, 1hole, 2-133
Clamp, Cable, Stl, 2.00d X 0.75w, 1h, 2-115
Clamp, Cable, Stl, 2.00d X 0.75w, 1hole, 2-117
Clamp, Cable, Stl, 2.25d X 1.00w, 1h, 3-65, 3-73, 3-83, 3-89
Clamp, Cable, Stl, 2.25d X 1.0w, 1h, 2-113
Clamp, Cable, Stl, 3.32d X 0.75w, 2hole, 2-37
Clamp, Hold Down, 4-67, 4-69
Clamp, Hose, 1.0, 2-84, 2-89
Clamp, Hose, Spring Stl, 0.86d X 0.38w, 2-95, 2-97, 2-99, 2-101
Clamp, Hose, Spring, 0.62d, 2-83, 2-89
Clamp, Hose, Wormdrive, 5-3, 6-3
Clamp, Hose, Wormdrive, 0.25-0.62d, 2-113, 2-115
Clamp, Hose, Wormdrive, 0.25-0.62d, .31w, 2-61, 2-69, 2-117, 2-133
Clamp, Hose, Wormdrive, 0.50-1.06d, .50w, 2-63
Clamp, Hose, Wormdrive, 0.56-1.06d, 2-93, 3-65, 3-73, 3-83, 3-89
Clamp, Hose, Wormdrive, 0.56-1.06d, .56w, 2-61, 2-65, 2-71, 2-73, 2-79, 2-83, 2-89
Clamp, Hose, Wormdrive, 0.81-1.50d, 3-73, 3-89
Clamp, Hose, Wormdrive, 0.81-1.50d, .50w, 2-59, 2-63, 2-75
Clamp, Hose, Wormdrive, 1.06-2.00d, 2-129, 2-131, 2-133
Clamp, Hose, Wormdrive, 1.25-2.00d, 2-129, 2-131
Clamp, Hose, Wormdrive, 1.31-3.25d, 2-95
Clamp, Hose, Wormdrive, 1.31-3.25d, .50w, 2-99
Clamp, Hose, Wormdrive, 2.25-3.25d, .50w, 2-97, 2-101
Clamp, Hose, Wormdrive, 2.62-3.50d, 2-37
Clamp, Hose, Wormdrive, 3.25-4.00d, .50w, 2-97, 2-101
Clamp, Manifold, 2-63, 2-65, 2-75, 2-80
Clamp, Muffler, 1.62d, 2-107, 2-109
Clamp, Valve, Trim [Impco], 2-80
Clamp,Cable .44D .62Wide, 3-109
Cleaner, Air Al Se, 2-91, 2-93, 2-95, 2-99
Clevis, Adj, 0.25pin, 0.25-28 Rh, Pl, 2-153
Clip Finger Grip, 3-97, 3-99
Clip, Keeper, Open, 2-123, 2-125
Clip, Retainer, 4-49, 4-51
Coil, 7-5
Coil 12V w/Var CP, 4-43
Coil, 12V W/Var, 4-38, 4-39
Coil, Condenser, 4-55, 4-57
Coil, Evaporator, 4-59, 4-61
Column, Steering 12", 2-189
Compressor, A/C, 3-67, 3-75
Compressor, A/C [2007], 3-79
Condenser Assy, A/C, 4-55
Condenser, A/C [Badger Gray], 4-57
Condenser, A/C, Roof (See Breakdowns), 3-63, 3-69, 3-71
Condenser, A/C, Roof [R134 Bd, Gray], 4-57
Conn Rod, 7-7
Connecting Rd, 5-22, 6-22
Connector, Ele, Plug, Femal, .156d, 3-51, 3-53
Connector, Fuel, E90, Qf, 2-117
Connector, Fuel, Qf, 2-115
Control Kit, Govnr, Replmt [All Purpose], 2-61, 2-69
Control, Electonic, Gas, 4-75
Control, Govnr [All Purpose], 2-61
Control, Manual, 4-11
Control, Manual (See Breakdowns), 4-3, 4-7, 4-13, 4-17
Controller Assy, Rfs, 3-109
Controller Kit, Lpg, 12vdc, 2-73
Cooler, Hyd, 24gpm 400btu Of08 13x12x2, 2-165
Coupler En, 4-5, 4-9, 4-15, 4-19
Coupling, 3-109
Coupling, Drive, Flex, 10.3d /15tooth, 2-43
Coupling,Quickdisc, Lpg, Shwd, 2-119, 2-121, 2-123, 2-125
Cover, 7-3, 7-7, 7-9, 7-11
Cover Assy, Hppr, 2-33
Cover Assy, Hppr [800 B/Green], 2-33
Cover Wldt, Fuel Inlet, 3-55
Cover Wldt, Fuel Inlet [800 Gray], 3-55
Cover Wldt, Hppr, Lh [800 B/Green], 2-33
Cover Wldt, Hppr, Rh, 2-33
Cover Wldt, Hppr, Rh [800 B/Green], 2-33
Cover Wldt, Hppr, Side, Lh, 2-33
Cover Wldt, Inlet, Fuel (LPG Only), 3-55
Cover Wldt, Pump, Oil [Lrg423], 2-41
Cover, Access, Eng, 2-13
Cover, Access, Front Hppr, 2-29
Cover, Access, Oprtr Station, Side, 2-13
Cover, Access, Oprtr Station, Side[Gray], 2-13
Cover, Access, Side Hppr, 2-29
Cover, Belt, Timing [Lsg423fd], 2-41
Cover, Cab Pressurizer, 3-55
Cover, Cab, Lpg [800 Gray], 3-55
Cover, Duct, Inlet, Vacfan, 2-29
Cover, Electrical, 3-109
Cover, Eng, Top, 2-19
Cover, Eng, Top [800 B/Green], 2-19
Cover, Hose, 2-83, 2-89
Cover, Housing, Electrical, 3-109
Cover, Latch Assy, Door, 4-49
Cover, Latch Assy, Door [800 Gray], 4-51
Cover, Motor, 3-109
Cover, Pressrzr, Cab [Gray], 3-55
Cover, Relay Panel, 2-192
Cover, Rocker Switch Seal, 2-175, 2-181, 2-191, 3-41
Cover, Side, Fuel, Gas, W/ Label [800], 2-13
Cover, Side, Fuel, Gas, W/ Label[800b/G], 2-13
Cover, Wheel, Steering, 2-189
Cradle Sub Assy En, 4-7, 4-17

Crankshaft, 7-11
Crankshaft Asy, 5-13, 6-13
Crnksft Seal-Rear, 5-13, 6-13
Crnksft Sprckt, 5-13, 6-13
Crnkshaft Key, 5-13, 6-13
Cs, Armrest, Blk, 2-15
Cs, Fitting, Brs, Str, Pm08/Pf04, 2-75
Cyl Block Assy (Short Block Assy), 5-3, 6-3
Cylinder, Hyd, 1.5b 06.3l 01.50strk 2500, 2-175, 3-41
Cylinder, Hyd, 2.0b 08.0l 04.00strk 2500, 2-181
Cylinder, Hyd, 2.0b 12.0l 08.00strk 2500, 2-31
Cylinder, Hyd, 2.0b 15.0l 08.00strk 1500, 2-145
Cylinder, Hyd, 2.0b 23.8l 14.90strk 2500, 2-27
Cylinder, Hyd, 2.0b,15.0l, (Replaced by1028492) (See Breakdowns), 2-145
Cylinder, Hyd, 2.0b,15.0l, Rep.By1028492, 4-44
Cylinder, Hyd, 4.0b 29.1l 14.50strk 2500, 2-27, 4-45
Cylinder, Master Brake, 2-151
Cylinder, Wheel, Brake, 4-67, 4-69

D

Dipstick, 7-7
Disc, Stl, 0.06, 02.00d, 0.6h, 2-37
Disk, 3-97, 3-99
Distributor, 7-5
Door Assy [800 B/Green], 2-23
Door Assy [800/810 08], 2-23
Door Assy, Cab, Replmt [800], 4-49
Door Assy, Cab, Replmt [800gray], 4-51
Door Wldt, 2-21
Door Wldt, Access, Rear W/ Grill, 2-19
Door Wldt, Access, Rear, W/ Grill [B/Gr], 2-19
Door Wldt, Brush, Lh, 2-9
Door Wldt, Brush, Lh [800 Gray], 2-9
Door Wldt, Brush, Rh, 2-11
Door Wldt, Brush, Rh [800 Gray], 2-11
Door Wldt, Cab, 4-49
Door Wldt, Cab [800 Gray], 4-51
Door Wldt, Dump, Hppr, Front, 2-31
Door Wldt, Dump, Hppr, Front [800 Gray], 2-31
Door Wldt, Eng, Side, 2-21
Door Wldt, Eng, Top [800 B/Green], 2-17
Door Wldt, Eng, Top [800], 2-17
Door, Bmpr, Lpg, 2-7
Door, Bumper, Lpg [800 Gray], 2-7
Dowel, 5-3, 6-3
Dowel Bushing En, 4-7, 4-17
Dowel Pin, 4-11
Dowel Pin En, 4-21
Dowel,Frnt Cover, 5-3, 6-3
Drain Cock, .25npt, 2-127
Drain Cock,.25Npt Wh#120 Angl, 2-135, 2-137, 2-139
Draincock,End.Block, 5-3, 6-3
Drive, 4-27, 4-29, 4-32, 4-33, 4-37
Drive Assy, 5-9, 6-9
Drive Gear Assembly, 4-23
Drive, Motor, Hyd, 4-31
Drive, Valve, 4-27, 4-29
Drum Assy, Brake 9/16, 2-147
Dryer, Ac, 4-55, 4-57
Duck Bill, 4-59, 4-61, 4-63, 4-65
Duct Wldt, Rfs, 3-109
Duct, Afmkt, Vyl, 0.40 X 0.75 .25d, 04ft, 3-3, 3-5, 3-7, 3-9, 3-11, 3-13, 3-15, 3-17
Duct, Rear, 2-135, 2-137, 2-139
Dust Cntrl Kit, Side Brush, Ci[800lgray], 3-103
Dust Control Kit, Side Brush, 3-101

E

Elbow,90 deg, 5-15, 6-15
Element, Air Cleaner, 2-91, 2-93, 2-95, 2-99
Element, Filter Safety, 2-91, 2-93, 2-95, 2-99
Element, Filter, Air, 2-4
Element, Fltr, Air, 2-4, 2-37, 2-97, 2-101
Element, Fltr, Air [Dn], 2-4, 2-97, 2-101
Element, Fltr, Air, 20.5d 10.8l, 2-37
Element, Fltr, Fuel, Lpg[Coalescent], 2-75
Element, Fltr, Hyd Oil, 2-4, 2-165
Element, Fltr, Oi, 2-59
End Cap, 4-33
Engine [Ford, 2.5l Reman] (See 2.5L Engine Brkdn), 2-41
Engine Purch Kit, Lrg423 (See 2.3L Engine Brkdn), 2-41
Engine, Block, Long [Gm3.0l] (See GM Engine Breakdown), 2-47, 2-49
Engine, Gm, 3.0 Liter, Gas (See GM Engine Breakdown), 2-45
Engine, Gm, 3.0 Liter, Lpg (See GM Engine Breakdown), 2-45
Engine, Partial (Includes block, pistons, rods, crankshaft, bearings, rear seal gasket), 7-7
Exh.Manifold, 5-15, 6-15
Extinguisher Kit Fire 800, 3-105
Extinguisher, Fire, 3-105

F

Fan, Condenser, 4-55, 4-57
Fan, Cooling, 18.0d, 8 Blade, 0.5b Taper, 2-139
Fan, Radiator, 2-135, 2-137
Fan, Repair Kit, Reassembly, 2-185
Ferrule, 2-37
Filter Assy, Air, 3.0 Inlet, 2-97, 2-101
Filter Assy, Hyd, 10mic 035gpm, Spin-On, 2-165
Filter Element, Oil, 5-3, 6-3
Filter Element, Oil, Cont. Gas-SE, 2-4
Filter Kit, Fuelock, Lpg, 2-79
Filter Kit, Fuelock,Lpg, 2-89
Filter, Air, Pre-Cln, A/C, 2-97, 2-101
Filter, Fuel, 2-4, 2-111, 2-113
Filter, Fuel [Gm 1.6l/3.0l], 2-117
Filter, Fuel, In-Line [02pm/08if], 2-61
Filter, Fuel, Lpg [Coalescent], 2-75
Filter, Fuelock, 2-71
Filter, Fuelock, [Ballwin#4-2384b], 2-121
Filter, Panel, Heat-A/C, 3-63, 3-69, 3-71, 3-81, 3-85, 3-87
Filter, Pre-Cleaner, A/C, 2-91, 2-93, 2-95, 2-99
Fitting, 2-59, 2-75
Fitting [Gm3.0l], 2-50
Fitting Kit [Epr], 2-83, 2-89
Fitting-Brs Str, 2-111
Fitting, Barb, 3/4" [Epr], 2-87
Fitting, Brass, Tee, 3-73, 3-89
Fitting, Brs, Adapter, 2-79
Fitting, Brs, Breather [02mp], 2-39
Fitting, Brs, Drain Cock, 2-61, 2-71, 2-73
Fitting, Brs, E45, Pf06/Pm06, 2-73
Fitting, Brs, E90, Em05/Pm02, 2-113
Fitting, Brs, E90, Em10/Pm06, 2-93
Fitting, Brs, E90, Em10/Pm08, 3-65, 3-73, 3-83, 3-89
Fitting, Brs, E90, If05/Pm02, 2-113
Fitting, Brs, E90, If05/Pm04, 4-75, 4-77
Fitting, Brs, E90, Em05/Pm02, 2-69
Fitting, Brs, E90, Em05/Pm04, 2-117
Fitting, Brs, E90, Em10/Pm06, 2-71, 2-73
Fitting, Brs, E90, If06/Pm04, 2-115
Fitting, Brs, E90, Pf04/Pm04, 2-73
Fitting, Brs, E90, Pm04/Pf04, 2-115
Fitting, Brs, Rst, Pf04/.69-16f, .063, 2-75
Fitting, Brs, Str, Bm05/Pm04, 2-113
Fitting, Brs, Str, Em10/Pm08, 3-65, 3-73, 3-83, 3-89
Fitting, Brs, Str, If05/If05, 2-113
Fitting, Brs, Str, If05/Pm02, 2-113
Fitting, Brs, Str, .25-28/Spcl [Carb], 2-69
Fitting, Brs, Str, Bm03/Bm03, Bh, 2-39
Fitting, Brs, Str, Bm03/Pm02, 2-39, 2-71
Fitting, Brs, Str, Bm05/Pm04, 2-117
Fitting, Brs, Str, Bm06/Pm04, 2-75
Fitting, Brs, Str, Em10/Pm06, 2-73
Fitting, Brs, Str, If05/If05, 2-115
Fitting, Brs, Str, If06/If06, 2-115
Fitting, Brs, Str, Pf06/Pm08, 2-63, 2-75
Fitting, Brs, Str, Pm02, Service, 2-97, 2-101
Fitting, Brs, Str, Pm04/Bm05, 2-115
Fitting, Brs, Tee, Pf08/Pf08/Pf08, 3-65, 3-73, 3-83, 3-89
Fitting, Brs, Tee, Pf04/Pf04/Pm04, Br, 2-71
Fitting, Bshg, 2-67, 2-83, 2-89
Fitting, Cap, 2-79

Fitting, Coolant Plug, 4-71, 4-73, 4-75, 4-77
Fitting, Draincock, .25npt, 2-129, 2-131, 2-133
Fitting, Draincock, E90, .25npt, 2-75, 2-133
Fitting, E70, 2-79
Fitting, E90, 2-59, 2-67, 2-79, 2-83, 2-84, 2-87, 2-89
Fitting, Elbow, 2-63, 2-75, 3-63, 3-69, 3-71, 3-81, 3-85, 3-87
Fitting, Fuel Inlet, Lpg, 4-71, 4-73
Fitting, Fuel, Str, 0.38-24 [07 Eng], 2-117
Fitting, Fuel, Str, 0.56-18 [07 Eng], 2-117
Fitting, Hose, 2-63
Fitting, Hose, 10hose/Pm06, 2-79
Fitting, Hose, Vacuum, .25, 2-79
Fitting, Hyd, E45, Jf12/Jm12, 2-155
Fitting, Hyd, E45, Jm06/Om06, 2-145
Fitting, Hyd, E45, Jm08/Om08, 2-187
Fitting, Hyd, E45, Pm04/Pf04, 2-121
Fitting, Hyd, E90, Fm12/Om16, 2-155
Fitting, Hyd, E90, Jf04/Jm04, 2-27, 2-31
Fitting, Hyd, E90, Jf06/Jm06, 2-139, 2-169
Fitting, Hyd, E90, Jf08/Jm08, 2-169, 2-187
Fitting, Hyd, E90, Jm04/Om04, 2-31, 2-187
Fitting, Hyd, E90, Jm04/Om04, Long, 2-31
Fitting, Hyd, E90, Jm04/Om06, 2-27, 2-169
Fitting, Hyd, E90, Jm06/Om04, 2-139
Fitting, Hyd, E90, Jm06/Om08, 2-27
Fitting, Hyd, E90, Jm06/Pm06, 2-59
Fitting, Hyd, E90, Jm08/Om10, 2-139, 2-187
Fitting, Hyd, E90, Jm08/Pm04, 2-75
Fitting, Hyd, E90, Jm10/Pm06, 2-69
Fitting, Hyd, E90, Jm10/Pm08, 2-71, 2-73
Fitting, Hyd, E90, Jm12/Om12, 2-165
Fitting, Hyd, E90, Spcl, 2-89
Fitting, Hyd, E90, Swivel Pf04/Pm04, 2-121, 2-123, 2-125
Fitting, Hyd, Plug, Jm06, 2-59
Fitting, Hyd, Rst, Jf04/Jm04, .047, 2-169
Fitting, Hyd, Rst, Jf04/Jm04, .063, 2-27
Fitting, Hyd, Str, Fm12/Om16, 2-145
Fitting, Hyd, Str, Jf08/Jm06, 2-139
Fitting, Hyd, Str, Jm04/Om04, 2-163, 2-187
Fitting, Hyd, Str, Jm04/Om06, 2-169
Fitting, Hyd, Str, Jm04/Om08, 2-27
Fitting, Hyd, Str, Jm05/Om06, 2-115
Fitting, Hyd, Str, Jm06/Jm08, 2-171
Fitting, Hyd, Str, Jm06/Om04, 2-135, 2-137, 2-139
Fitting, Hyd, Str, Jm06/Om06, 2-115
Fitting, Hyd, Str, Jm06/Om08, 2-169
Fitting, Hyd, Str, Jm06/Om10, 2-171
Fitting, Hyd, Str, Jm06/Pm04, 2-71
Fitting, Hyd, Str, Jm08/Om08, 2-169, 2-187
Fitting, Hyd, Str, Jm08/Om10, 2-187
Fitting, Hyd, Str, Jm12/Om12, 2-165
Fitting, Hyd, Str, Pf02/Pm04, 2-41, 2-71, 2-73
Fitting, Hyd, Str, Pm08/Pm08, 3-65, 3-73, 3-83, 3-89
Fitting, Hyd, Tee, Jf04/Jm04/Jm04, Br, 2-169
Fitting, Hyd, Tee, Jf04/Jm04/Jm04, Run, 2-169
Fitting, Hyd, Tee, Jf06/Jm06/Jm06, Br, 2-135, 2-137, 2-139
Fitting, Hyd, Tee, Jf06/Jm06/Jm06, Run, 2-169, 3-41
Fitting, Hyd, Tee, Jm04/Jm04/Jm04,Bh Br, 2-31
Fitting, Hyd, Tee, Jm08/Jm08/Om08, Br, 2-169
Fitting, Manifold, Intake, 2-63, 2-65, 2-75, 2-80
Fitting, Nipple, .25mal, 2-83, 2-89
Fitting, Nipple, .25npt, Brs, 2-79
Fitting, Pipe, E90, Pf02/Pm02, 2-61
Fitting, Pipe, Plug, Pm02 Soc Head, 4-71, 4-73, 4-75, 4-77
Fitting, Pipe, Plug, Pm04, Hex Soc, 2-75
Fitting, Pipe, Plug, Pm08, Sq Head, 2-73
Fitting, Pipe, Str, Pm04/Pf02, 2-121, 2-123, 2-125
Fitting, Pipe, Str, Pm04/Sf04, 2-125
Fitting, Pipe, Tee, Pf06/Pf06/Pm06, 2-79
Fitting, Plstc, Tee, Bm12/Bm12/Bm12, 3-73, 3-89
Fitting, Plstc, Tee, Bm12/Bm12/Pf08, Br, 2-75
Fitting, Plug, 2-59, 2-135, 2-137, 2-139
Fitting, Plug, .50-20 Hex [Perk], 2-155
Fitting, Plug, Om02, Valve, 4-81
Fitting, Plug, Om04, Valve, 4-81
Fitting, Plug, Om05, Valve, 4-81
Fitting, Plug, Om06, Valve, 4-81, 4-82
Fitting, Str, 2-79
Fitting, Str, E90, .25npt, 2-79
Fittting, Plstc, Str, Bm06/M.69-16, 2-75
Flange, Mounting, 4-32, 4-33
Flange,Brg,3 Hole, 2-179
Flasher Heavy Duty, 3-31
Flasher, 12v, 3-27, 3-29
Flat Washer, 3/8" Hard, 3-41
Floor Kit, Hppr, Ssb, Ci [800lgray], 3-37
Flywheel, 5-17, 6-17
Flywheel Ring Gear, 5-17
Foam, Insulation, 3-33, 3-35
Follower, Piston, 4-3, 4-7, 4-13, 4-17
Foot, Fan, 4-55, 4-57
Frame Wldt, Main [800l Gray], 2-7
Frame Wldt, Main [800l], 2-7
Frame, Pane, Cab, Side, 4-47
Frame, Pane, Door, Side, 4-49, 4-51
Frame&Mag.As, 5-9, 6-9
Ftg-Brs If05/If05, 2-111
Ftg-Brs Str If05/Pm02, 2-111
Ftg-El90 Npt/Npt 04Pf/04Pm, 2-119, 2-121, 2-123, 2-125
Ftg-Hyd E45 Jm04/Om04, 2-145, 2-181
Ftg-Hyd E45 Jm12/Jf12, 2-155
Ftg-Hyd E45 Jm20/Jf20, 2-155
Ftg-Hyd E45 Pm04/Pf04, 2-119, 2-121, 2-123, 2-125
Ftg-Hyd E90, 2-163, 2-175
Ftg-Hyd E90 Jm04/Om04, 2-175
Ftg-Hyd E90 Jm04/Jf04, 2-163
Ftg-Hyd E90 Jm04/Om04, 2-167, 2-175, 2-181, 3-41
Ftg-Hyd E90 Jm06/Om06, 2-145
Ftg-Hyd E90 Jm06/Om08, 2-135, 2-137, 2-139
Ftg-Hyd E90 Jm08/Jf08, 2-167, 3-45
Ftg-Hyd E90 Jm08/Om08, 2-167, 3-45
Ftg-Hyd E90 Jm12/Om12, 2-155
Ftg-Hyd E90 Special Jm12/Jf12, 2-163
Ftg-Hyd Plg Om06, 3-41
Ftg-Hyd Plg Om12, 2-163
Ftg-Hyd str, 2-175
Ftg-Hyd Str Jm12/Om16, 2-155
Ftg-Hyd Str Jm04/Om04, 2-179
Ftg-Hyd Str Jm06/Jf08, 3-45
Ftg-Hyd Str Jm06/Om06, 2-167, 2-189, 3-41, 3-45
Ftg-Hyd Str Jm06/Om08, 2-135, 2-137, 2-139
Ftg-Hyd Str Jm06/Om10, 2-155
Ftg-Hyd Str Jm06Om06L, 2-167
Ftg-Hyd Str Jm08/Om08, 2-167, 2-179
Ftg-Hyd Str Jm08/Om10, 2-155
Ftg-Hyd Str Jm08Om08L, 2-167
Ftg-Hyd Str Jm12/Om12, 2-163
Ftg-Hyd Str Jm12Om12L, 2-167
Ftg-Hyd Str Jm20/Om20, 2-155, 2-163
Ftg-Hyd Str Om08/Of06, 3-45
Ftg-Hyd StrJm06/Om10, 3-45
Ftg-Hyd Tee Jm04Jmom, 2-163
Ftg-Hyd Tee Jm06Jmjf, 2-163
Ftg-Hyd Tee Jm06Jmom, 2-163
Ftg-Hyd Tee Jm06Omjm, 3-45
Ftg-Hyd Tee Jm08Jmjf, 2-167, 3-45
Ftg-Hyd Tee Jm12Jfjm, 2-155
Ftg-Hyd Tee Jm12Jmjf, 2-163
Ftg-Str Npt/Npt S04Pf-04Pm, 2-119, 2-121
Ftg-Tee Npt 04Pm- 04Pf- 04Pf, 2-119, 2-121, 2-123, 2-125
Ftg, Breather, 3-109
Ftg, Grease.12 Npt 45 .88L, 2-183
Ftg, Grease.25-28Th 90 .75L, 2-145
Ftg, Shrader, 4-55, 4-57
Ftg,Brass,St Bm03/Pm02, 3-109
Ftg,Brass,Tee 06If- 02Pm- 06If, 2-151
Ftg,Bulkhead .25Npt Wh W21204, 2-119, 2-121, 2-123, 2-125
Ftg,Bulkhead-Barb Wh 1074X4, 3-109
Fuel, Fltr [Gm 1.6l/3.0l], 2-115
Fuelline, .31d 05if/05jf Stl, 2-115
Fuelline, .31d Str/E90, Plstc, 2-115
Fuelline, .31d Str/Str, Plstc, 2-115

Fuelline, .312 Od, 2-111
Fuelline, .31d 05if/05f, 2-113
Fuelline, .31d 05if/05if, 2-113
Fuelline, .31d 05if/Bea, 2-113
Fuelline, .31d 05if/Qm Stl, 2-115
Fuelline, .31d E90, 05/06, Plstc, 2-117
Fuelline, .31d Str/Str, Plstc [8200], 2-117
Fuelline, .31d Str/Str,Plstc[M20/T20 07], 2-117
Fuelline, .38d 06if/06if Stl, 2-115
Fuelline, .38d 06if/Bea Stl, 2-115
Fuelline, .38d 06sf/06sf, Stl, 2-71
Fuelock Kit, Replmt, 2-71
Fuse, 10 Amp, 2-227, 2-228
Fuse, 15 Amp, [Min-15], 2-225, 2-227, 2-228
Fuse, 20 Amp, [Min-20], 2-225, 2-227, 2-228
Fuse, 5 Amp, [Min-5], 2-225, 2-227, 2-228
Fuse, 60 Amp, 2-227, 2-228

G

Gas Cap, Protectoseal, 3-104
Gasket, 2-79, 2-105, 2-107, 7-3, 7-5, 7-9, 7-11, 7-12
Gasket Kit, Manifold, 2-63
Gasket Kit, Repair, Lpg [Gm1.6l 2007], 2-87
Gasket Kit, Vacfan, Replmt [800l], 2-185
Gasket Oil, 5-5, 5-11
Gasket Water Outlet Connection, 5-23, 6-23
Gasket, 2.7D 1.5B.12T 5/ 2.1Bc, 2-111
Gasket, Body, Throttle [1.6l], 2-65, 2-67, 2-79, 2-83
Gasket, Box/Cab, 4-59, 4-61, 4-63, 4-65
Gasket, Cab Pressurizer, 3-55
Gasket, Carb, 2-65, 2-79
Gasket, Carb, .03, 1.18id, 2/2.5bc, 2-61, 2-69
Gasket, Carb, .06, 2.62id 3.00od, Rbr, 2-61
Gasket, Cover, Alum, 3-109
Gasket, Exh. Flange, 5-15, 6-15
Gasket, Exhaust, 2 Hole, 3.4bc, 2-107
Gasket, Exhaust, 2hole, 3.4bc, 2-109
Gasket, Fire Switch, 2-187
Gasket, Flng, Exhaust [Gm3.0l], 2-109
Gasket, Head, 5-5, 5-6, 6-5, 6-6
Gasket, Hyd Cap, 2-163
Gasket, Hyd Tank Breather, 2-163
Gasket, Lpg, Adapter [Gm 2007], 2-83
Gasket, Lpg, Mixer [Gm 2007], 2-83
Gasket, Manifold, Exhaust, 2-63, 2-65, 2-75, 2-80
Gasket, Manifold, Intake, 2-63, 2-65, 2-67, 2-75, 2-80, 2-83, 2-87
Gasket, Send-Unit, 2-113
Gasket, Sender, Fuel, 2-115, 2-117
Gasket, Ure, .13, 1.75id 2.31od, 2-187
Gasket,Oil Pan, 5-5, 5-11, 6-5, 6-11
Gasket,Rocker Cover, 5-21, 6-21
Gasspring Assy, Eng Cover, 2-33
Gauge, Sight Lh, 2-163
Gauge, Sight, A/C, 3-63, 3-69, 3-71
Gear, 4-23, 4-25, 7-5, 7-11, 7-12
Gear Assy, 5-9, 6-9
Gear Assy, Idler, 4-25
Gear, [Slip Fit], 4-25
Gear, Drive, 4-25
Gear, Idler, 4-23, 4-25
Gear, Ring [Fd], 6-17
Gear, Slip Fit, 4-23
Geroler Set, Motor, Hyd, 4-31
Geroter,Ring In En, 4-5, 4-9, 4-15, 4-19
Geroter,Ring Ot En, 4-5, 4-9, 4-15, 4-19
Gerotor Set, 4-27, 4-29, 4-32, 4-33
Gerotor Set Cl, 4-37
Glass, Pane, Windshield,800 Cab, 4-47
Governor Assy [Ford, 2.3 Gas, 800l], 2-61
Governor Assy [Ford, 2.3/2.5] Rep.Bynone, 2-69
Governor Assy, Ford 2.5 Gas, 2-61
Governor, Gas, 2-61
Governor, Lpg, 2-69
Grip, Handle, Flat, 3-97, 3-99
Grommet, 2-45, 2-65, 2-67, 2-79, 2-83, 2-87, 3-19, 3-21, 3-23, 3-25, 3-27, 3-29
Grommet Rbr 0.25Id For .09Matl, 3-31, 3-51, 3-53
Grommet, Breather, Oil, 7-3
Grommet, Cab, Harness, Wire, 3-63, 3-69, 3-71, 3-81, 3-85, 3-87
Grommet, Flexible, .25 06.0l, 2-7
Grommet, Flexible, .25 24.0l, 2-7
Grommet, Rbr, 0.38 Id For .12mat, 3-19, 3-21, 3-23, 3-25
Grommet, Rbr, 0.50id, F/0.8h, .25 Matl, 2-7
Grommet, Rbr, 0.56 Id For .13mat, 3-19, 3-21, 3-23, 3-25
Grommet, Rbr, 0.62id, F/0.9h, .06 Matl, 2-39
Grommet, Rbr, 1.00id, F/1.4h, .12 Matl, 3-55, 4-47
Grommet, Rbr, 3.25id, F/3.5h, .06 Matl, 2-97, 2-101
Grommet, Rbr, 3.75Id F/ 4.0H ., 2-91, 2-93, 2-95, 2-99
Grommet,Rbr,0.25Id,For .09Matl, 2-191
Grommet,Rbr,0.38Id,For .06Matl, 3-3, 3-5, 3-7, 3-9, 3-11, 3-13, 3-15, 3-17
Grommet,Rbr,0.62Id,For .06Matl, 3-109
Grommet,Rbr,0.63Id,For .06Matl, 3-3, 3-5
Grommet,Rbr,0.63Id,For .13Matl, 3-11, 3-13
Grommet,Rbr,0.75Id,For .13Matl, 3-31
Gskt Kit,Lower, 5-5, 6-5
Gskt Kit,Upper, 5-5, 6-5
Gskt-Waterout, 5-5, 6-5
Gskt,Exh.Mnfld, 5-15, 6-15
Gskt,Frnt Cvr, 5-5, 6-5
Gskt,Front Cvr, 5-7, 6-7
Gskt,In.Manfld, 5-5, 6-5
Gskt,Int.Mnfld, 5-15, 6-15
Gskt,Oilpmp/Blk, 5-11, 6-11
Gskt,Pmp/Putube, 5-5, 6-5
Gskt,Pu Tube, 5-11, 6-11
Gskt,Rockr Cvr, 5-5, 6-5
Gskt,Water Pump, 5-5, 5-23, 6-5, 6-23
Guard Kit, Overhead, 3-33
Guard Wldt, Alternator, F/60559, 2-41
Guard Wldt, Brush, Side [800 Gray], 3-47
Guard Wldt, Hppr, 2-35
Guard Wldt, Light, Revl/Flsh, 3-15
Guard Wldt, Light, Revl/Flsh [800 Gray], 3-5, 3-9, 3-13, 3-17
Guard Wldt, Light, Strobe/Flsh, 3-3, 3-7, 3-11
Guard Wldt, Lights, Strobe & Flsh, 3-3, 3-7, 3-11, 3-15
Guard Wldt, Ohg [800 Gray], 3-35
Guard Wldt, Overhead, 3-33
Guard Wldt, Sidebrush, 3-47
Guard, Alternator, 3-91
Guard, Belt, A/C, 3-75
Guard, Belt, Alternator, 2-53, 2-55
Guard, Brush, Side .38th 2.0w [800], 2-173
Guard, Mirror, 3-57
Guard, Mirror [Gray], 3-59
Guard, Side Brush, 3-47
Guard, Side, Brush [800 Gray], 3-47
Guide, Align, Bmpr, Pye, 2-7
Guide, Fltr, Shakr, [800], 2-37

H

Handle, 3-97, 3-99
Handle, Container, 2-33
Handle, Lift, Brush, 2-189
Handle, Valve, Cntrl, 2-133
Handle, Valve, Hyd, Ctr, 2-169
Handle, Valve, Hyd, Ctr [800 Gray], 2-169
Handle, Valve, Hyd, Lh, 2-169
Handle, Valve, Hyd, Lh [800 Gray], 2-169
Handle, Valve, Hyd, Rh, 2-169
Handle, Valve, Hyd, Rh [800 Gray], 2-169
Harness, Rfs Jumper, 3-109
Harness, Adapter, Eng, Gas/Lpg [Gm3.0l], 2-239
Harness, Adaptor [800/8410], 2-237
Harness, Alarm, Back-up, 3-27, 3-29
Harness, Alarm, Backup, 3-19, 3-23
Harness, Cab (See Fig. 31), 4-47
Harness, Cab, 800/810, 4-54
Harness, Directional, 3-31
Harness, Eng, 2-117
Harness, Eng [3.0l, Gm, E-cntrl], 2-225
Harness, Eng, Gas [3.0l 2007], 2-227
Harness, Eng, Lpg [3.0l 2007], 2-227
Harness, Gm 3.0 L Engine Harness, 2-222
Harness, Hopper 800/810, 2-212
Harness, Hopper, Rfs, 3-109

Harness, Injector, Gas[3.0l Gm,E-Cntrl], 2-226
Harness, Light, Flsh, Revl, Cab, 3-21, 3-25
Harness, Lpg Injector [3.0l, Gm,E-Cont], 2-226
Harness, Main, Gas/LPG, Lrg, 2-211, 2-217, 2-222
Harness, Motor, Duct, 3-109
Harness, Neutral, Start, 3-112
Harness, Side Brush, L.H., 3-48
Harness, Strobe/Flsh Light,Cab,Ohg, 3-3, 3-5, 3-7, 3-9, 3-11, 3-13, 3-15, 3-17
Harness, Turn/Rotate/Tail Lights, 2-213
Harness, Wire, Eng, 6-24
Harness, Wire, Eng, Gas [Gm 3.0l 10], 2-228
Harness, Wire, Eng, Lpg [Gm 3.0l 10], 2-228
Harness,Switch,Oil Press,Ground Wire, 2-47, 2-50
Head, 7-3
Head-W/O Valves, 5-6, 6-6
Headlight, 12vdc, 50watt, 2-33
Heater [Badger, Gray], 4-65
Heater [Badger, Gray] (See Breakdowns), 3-87
Heater / Pressrzr Assy, Roof [800 Gray], 3-87
Heater & A/C, W/ Fan, Roof, 3-63, 3-69, 3-81, 3-85
Heater Assy, W/ A/C, Roof [R134, Gray], 3-71
Heater Coil, 4-59, 4-61, 4-63, 4-65
Heater, W/ A/C [Badger, Gray], 4-61
Heater, W/ A/C [Badger, Gray] (See Breakdowns), 3-71
Hinge, 2-17
Hinge Wldt, 2-33
Hinge Wldt [800 Blue/Green], 2-33
Hinge Wldt, Door, Side, W/ Pin, 2-21, 2-23
Hinge Wldt, Side, W/ Pin, 2-21, 2-23
Hinge Wldt, W/ Tube, 2-21, 2-23
Hook, Cable, .44d Ball, 2-171, 3-45
Hook, Lift [Gm3.0l 2007], 2-49, 2-50
Hook, S, .13d 1.0l, 2-7
Hopper Floor Kit, St Stl 800, 3-36
Hopper, Afmkt [800], 2-29
Horn, 12vdc, Dba [Wolo], 2-17
Horn, Back-up Alarm, 3-27
Hose, 2-63, 5-3, 6-3
Hose Assy, Drain, A/C, 3-63, 3-69, 3-71, 3-111
Hose Kit, Rear Drive, Replmt, 2-145, 2-155, 2-159, 2-161
Hose-Hyd Med 04, 3-49
Hose-Hyd Med 06, 3-49
Hose, 0.50d X 41.00l, 2-59
Hose, 0050, 04, Im05str /If05str , 10.0, 2-113, 2-115
Hose, 9.5mm X 450mm [Pcv], 2-65, 2-79
Hose, A/C, 06 09.0l, 3-63, 3-69, 3-71
Hose, A/C, 08 100.0l [R134], 3-65
Hose, A/C, 08, Str/E90, 112.0l [R134], 3-73
Hose, A/C, 12 107.0l [R134], 3-65
Hose, A/C, 12 115.0l [R134], 3-65
Hose, A/C, 12, Str/E90, 127.0l [R134], 3-73
Hose, Afmkt, Rbr, Heater, 0.62id, 02ft, 3-73, 3-89
Hose, Afmkt, Rbr, Heater, 0.62id, 03ft, 3-73, 3-89
Hose, Afmkt, Rbr, Heater, 0.62id, 08ft, 3-73, 3-89
Hose, Balancing, Press, 045mm, 2-79
Hose, Balancing, Press, 680mm, 2-79
Hose, Conv, 2-75
Hose, Coolant, 1.50id To 1.75id, Mold, 2-131, 2-133
Hose, Drain, Eng Oil, 2-59
Hose, Drain, Overflow, Radiator, 2-137, 2-139
Hose, Fan Inlet, 2-185
Hose, Fuel, 0.31id [Evap Emission 07], 2-117
Hose, Fuel, .38d, Rbr[16"L], 2-67, 2-83, 2-87
Hose, Fuel, 0.31id 11.0l, 2-113
Hose, Fuel, 0.31id 14.0l, 2-113
Hose, Fuel, 0.31id 16.0l, 2-115
Hose, Fuel, 0.38id, 18.0l, 2-63
Hose, Fuel, 0.38id, 21.0l, 2-75
Hose, Fuel, 0.50id, 52.0l, 2-63, 2-65
Hose, Fuel, 165mm, 2-79
Hose, Fuel, Jf06e90, 20.3l, 2-115
Hose, Fuelline, 10.0L, 2-111
Hose, Heater, 0.38id, 2-63
Hose, Heater, 0.62id 13.0l, 2-93, 3-65, 3-83
Hose, Heater, 0.62id 18.0l, 2-95
Hose, Heater, 0.62id 20.0l, 3-65, 3-83
Hose, Heater, 0.62id 24.0l, 2-99, 3-65, 3-83
Hose, Heater, 0.62id 31.0l, 3-65, 3-83
Hose, Heater, 0.62id 77.0l, 3-65, 3-83
Hose, Heater, 0.62id 80.0l, 3-65, 3-83
Hose, Heater, 0.62id, 015.0l Rep.Bynone, 2-71, 2-73
Hose, Heater, 0.62id, 020.0l, 2-71, 2-73
Hose, Heater, 0.62id, 024.0l, 2-97, 2-101
Hose, Heater, 0.62id, 038.0l, 2-61
Hose, Heater, 0.62id, 053.0l, 2-61, 2-71, 2-73
Hose, Heater, 0.75id 04.0l, 3-73, 3-89
Hose, Hyd, Low04, Jf04e90/Jf04str, 048.0, 2-159
Hose, Hyd, Low04, Jf04e90/Jf04str, 060.0, 2-159
Hose, Hyd, Low04, Jf04e90/Jf04str, 066.0, 2-159, 2-161
Hose, Hyd, Low06, Jf06e90/Jf06str, 052.0, 2-161
Hose, Hyd, Low06, Jf06e90/Jf06str, 060.0, 2-159, 2-161
Hose, Hyd, Low06, Jf06e90/Jf06str, 086.0, 2-159, 2-161
Hose, Hyd, Low06, Jf06str/Jf06str, 026.0, 2-59
Hose, Hyd, Low12, Jf12str/Jf12str, 016.0, 2-159, 2-161
Hose, Hyd, Low12, Jf12str/Jf12str, 018.0, 2-161
Hose, Hyd, Low12, Jf12str/Jf12str, 020.0, 2-159
Hose, Hyd, Low12, Jf12str/Jf12str, 027.0, 2-159, 2-161
Hose, Hyd, Low12, Jf12str/Jf12str, 030.0, 2-161
Hose, Hyd, Low12, Jf12str/Jf12str, 038.0, 2-159, 2-161
Hose, Hyd, Med04, Jf04e45/Jf04str, 034.0, 2-159, 2-161
Hose, Hyd, Med04, Jf04e90/Jf04str, 056.0, 2-159, 2-161
Hose, Hyd, Med04, Jf04e90/Jf04str, 072.0, 2-159, 2-161
Hose, Hyd, Med04, Jf04e90l/Jf04str,038.0, 2-159, 2-161
Hose, Hyd, Med04, Jf04str/Jf04str, 026.0, 2-159, 2-161
Hose, Hyd, Med06, Jf06e45/Jf06str, 035.0, 2-159, 2-161
Hose, Hyd, Med06, Jf06e45/Jf06str, 112.0, 2-159, 2-161
Hose, Hyd, Med06, Jf06e45/Jf06str, 118.0, 2-161
Hose, Hyd, Med06, Jf06e90/Jf06str, 023.0, 2-159, 2-161
Hose, Hyd, Med06, Jf06e90/Jf06str, 024.0, 2-159, 2-161
Hose, Hyd, Med06, Jf06e90/Jf06str, 046.0, 2-159, 2-161
Hose, Hyd, Med06, Jf06e90/Jf06str, 060.0, 2-159, 2-161
Hose, Hyd, Med06, Jf06e90/Jf06str, 072.0, 2-159, 2-161, 3-49
Hose, Hyd, Med06, Jf06str/Jf06str, 022.0, 2-159, 2-161
Hose, Hyd, Med06, Jf06str/Jf06str, 027.0, 2-159, 2-161
Hose, Hyd, Med08, Jf08e45/Jf08str, 060.0, 2-159, 2-161
Hose, Hyd, Med08, Jf08e45/Jf08str, 106.0, 2-159, 2-161
Hose, Hyd, Med08, Jf08e45/Jf08str, 112.0, 2-161
Hose, Hyd, Med08, Jf08e90/Jf08str, 028.0, 2-159, 2-161
Hose, Hyd, Med08, Jf08e90/Jf08str, 034.0, 2-159, 2-161
Hose, Hyd, Med08, Jf08e90/Jf08str, 040.0, 2-159, 2-161
Hose, Hyd, Med08, Jf08e90/Jf08str, 058.0, 2-159, 2-161

Hose, Hyd, Med08, Jf08e90/Jf08str, 062.0, 2-159, 2-161
Hose, Hyd, Med08, Jf08str/Jf08str, 066.0, 2-159, 2-161
Hose, Hyd, Med12, Jf12e45/Jf12str, 074.0, 2-159, 2-161
Hose, Hyd, Med12, Jf12str/Jf12str, 031.0, 2-161
Hose, Hyd, Suc20, Jf20e45/Jf20str, 022.5, 2-159, 2-161
Hose, Hyd, Tc04, Jf04e90/Jf04str, 092.0, 2-159, 2-161
Hose, Hyd, Tc04, Jf04str/Jf04str, 098.0, 2-159, 2-161
Hose, Hyd, Tc04, Jf04str/Jf04str, 106.0, 2-159, 2-161
Hose, Hyd, Tc04, Jf04str/Jf04str, 114.0, 2-159, 2-161
Hose, Hyd, Tc04, Jf04str/Jf04str, 138.0, 2-159, 2-161
Hose, Hyd, Tc04, Jf04str/Jf04str, 142.0, 2-159, 2-161
Hose, Hyd, Tc12, Ff12e45/Ff12str, 045.0, 2-161
Hose, Intake, Mold, 2.00id [Epdm], 2-101
Hose, Intake, Mold, 2.0id X 2.26id[Epdm], 2-101
Hose, Intake, Mold, 3.00id 2.00id [Epdm], 2-101
Hose, Intake, Mold, Rwk 380592, 2-97
Hose, Lpg, 4Lpg X 35.0Lg, 2-119, 2-121, 2-123
Hose, Lpg, 4Lpg X 40.0Lg, 2-119
Hose, Lpg, Med05, Pm04str/Sm04str, 055.0, 2-123
Hose, Lpg, Med05, Pm04str/Sm04str, 067.0, 2-125
Hose, Lpg, Med05, Pm04str/Sm04str, 31.0l, 2-121
Hose, Lpg, Med05, Pm04str/Sm04str, 46.0l, 2-123, 2-125
Hose, Lpg, Med05, Pm04str/Sm04str, 67.0l, 2-121
Hose, Lpg, Med08, Jf08str/Jf08str, 035.0, 2-75
Hose, Lpg, Med08, Jf08str/Jf08str, 037.5, 2-75
Hose, Lpg, Med10, Jf14str/Jf14str, 028.0, 2-71, 2-73
Hose, Mold [Epr To Mixer], 2-84, 2-89
Hose, Mold, .62 To .75, 2-79, 2-83, 2-89
Hose, Mold, .62 X 37.0, 2-79
Hose, Molded, 2-91, 2-93, 2-95, 2-99
Hose, Pvc, 18.0l, 2-45
Hose, Pvc, Clr, 0.38id 0.56od 013.0l, 2-75
Hose, Pvc, Clr, 0.38id 0.56od 048.0l, 2-133
Hose, Radiator, Lower, 2-127
Hose, Radiator, Upper, 2-127
Hose, Rbr 1.50id 1.88od 12.0 L, 2-127
Hose, Rbr, 0.38id 0.62od 21.0l, 2-61, 2-69
Hose, Rbr, 1.50id 1.88od 06.0l, 2-129, 2-131
Hose, Rbr, 1.50id 1.88od 12.0l, 2-129, 2-131, 2-133
Hose, Rbr, 1.50id 1.88od 04.0l, 2-133
Hose, Rbr, 1.50id 1.88od 6.0 L, 2-127
Hose, Rbr, 2.00id 2.50od 03.0l, 2-95, 2-99
Hose, Rbr, E120 1.50id 1.20id 05.0 05.2, 2-131
Hose, Rbr, E120 1.50id 1.20id 06.4 2.7, 2-129
Hose, Rbr, E90 1.50id 1.50id 09.4 6.3, 2-129
Hose, Rbr, E90 1.50id 1.62id 0.40 04.0, 2-131
Hose, Rbr, E90, 1.50id 1.50id 06.3 04.5, 2-133
Hose, Rbr, E90, 2.00id 2.00id 03.5 03.5, 2-97
Hose, Rbr, Mold, 0.50id 0.38id [Epdm], 2-61, 2-69
Hose, Supply, Gas, .25id, 2-83
Hose, Vacuum, .16 Id X 76.0 Lg, 3-109
Hose, Vacuum, 0.16id X 009.5l, 2-39
Hose, Vacuum, 0.16id X 015.6l, 2-41
Hose, Vacuum, 0.16id X 021.0l, 2-71
Hose, Valve, Fuel Trim, 325mm, 2-79
Hose, Valve, Press Trim, 405mm, 2-79
Hose&2Cuff Assy,Vinyl2.0Id10Ft, 3-97, 3-99
Hose&cuff Assy, Vinyl4.0Idx50, 2-185
House, Wheel, 2-145
Housing, 2-45, 4-25, 4-33, 7-3, 7-5, 7-11
Housing Assembly, 4-59, 4-63
Housing Assy, 4-27, 4-29
Housing Assy, Thr, 2-79
Housing Assy, Throttle, Gas, 2-65
Housing Assy, Throttle, Gas, [With Ecu], 4-75
Housing Assy, Throttle, Gas, [With Ecu] (See Breakdowns), 2-63
Housing Assy, Throttle, Gas, [Without Ecu], 4-77
Housing Assy, Throttle, Gas, [Without Ecu] (See Breakdowns), 2-63
Housing Assy, Throttle, Lpg, [With Ecu], 4-71
Housing Assy, Throttle, Lpg, [With Ecu] (See Breakdowns), 2-75
Housing Assy, Throttle, Lpg, [Without Ecu], 4-73
Housing Assy, Throttle, Lpg, [Without Ecu] (See Breakdowns), 2-75
Housing En, 4-3, 4-7, 4-13, 4-17
Housing S/A En, 4-3, 4-7, 4-13, 4-17
Housing Wldt, Vac Fan, Front, 2-185
Housing Wldt, Vac Fan, Rear, 2-185
Housing, Bearing, Motor, Hyd, 4-31
Housing, Brg, 4-27, 4-29
Housing, Condenser, 4-55
Housing, Flywheel [3.0l], 2-47, 2-49
Housing, Flywheel, Mach [Lrg 2.3, Ford], 2-43
Housing, Flywheel, Mach [Lrg 2.5, Ford], 2-43
Housing, Heater [Badger, Gray], 4-61, 4-65
Housing, Sppt, Wheel (Repl. by 375534), 2-145
Housing, Sppt, Wheel, Rear, 2-145
Housing, Thermostat [Gm3.0l 2007], 2-50
Housing, Throttle, 40mm [Bosch], 2-65, 2-67, 2-79, 2-83, 2-87
Housing, Throttle, Gas, 4-75, 4-77
Housing, Throttle, Lpg, 4-71, 4-73
Housing, Valve, 4-31
Housing,Control, 4-11
Housing,Control En, 4-21
Hsg W/Brg, 5-9, 6-9
Hub and Stud Assy., 2-145
Hub Assy, 2-149
Hub, Drive, Brush, Side, 1.00b 8.8bc, 2-5

I

Ignition Coil, 5-24, 6-24
Ignition Module Kit, 6-24
Impeller 9.5 Dia. 18 Blade Mac, 2-185
Indicator Service Air Filter, 2-91, 2-93, 2-95, 2-99
Indicator, Service, Fltr, Air [20h20 Dn], 2-97, 2-101
Indicator,Oil, 5-3, 6-3
Injector, Fuel, Lpg [3.0l Gm] 8410, 4-71, 4-73
Injector, Gas, W/ Top And Bottom Org, 4-75, 4-77
Inner Cover, 5-7, 6-7
Insert-Oilfilt, 5-3, 6-3
Insert, Wheel, Steering, 2-189
Instr, Kit, Repair, Pump, Hyd, 4-25
Instr. Valve Repair Info, 4-41
Insulation Kit, Cab [800], 4-53
Insulation, Acoustic, Fan, 2-185
Insulation, Acoustic, Vac Fan, 2-187
Insulation, Acstc, 0.5, 05.5 X 18.9 Adh, 4-51, 4-53
Insulation, Acstc, 0.5, 17.0 X 15.0, 2-19
Insulation, Acstc, 0.5, 47.3 X 01.8 Adh, 4-53
Insulation, Acstc, 0.8, 15.5 X 05.0, 2-19
Insulation, Acstc, 0.8, 16.5 X 04.5 Cham, 2-19
Insulation, Acstc, 0.8, 18.0 X 15.0 C-O, 2-19
Insulation, Acstc, 0.8, 20.3 X 19.3, 2-17
Insulation, Acstc, 0.8, 20.9 X 35.0 Ntch, 4-53
Insulation, Acstc, 0.8, 23.0 X 04.0, 2-19
Insulation, Acstc, 1.0, 01.5 X 04.0, 2-7
Insulation, Acstc, 1.0, 03.0 X 03.0, 2-7
Insulation, Acstc, 1.0, 03.5 X 09.0 Cham, 2-7
Insulation, Acstc, 1.0, 25.0 X 09.9, 2-13
Insulation, Acstc, 1.0, 26.5 X 27.3 Ntch, 2-13

Insulation, Acstc, 1.5, 04.0 X 04.0, 2-7
Insulation, Acstc, 1.5, 07.8 X 08.0 Cham, 2-11
Insulation, Acstc, 1.5, 07.8 X 08.0 Ntch, 2-9
Insulation, Acstc, 2.3, 13.5 X 13.5 Ntch, 2-15
Insulation, Acstc, Cab Front, 4-53
Insulation, Acstc, Cab Rear, 4-53
Insulation, Acstc, Cab, Leg, Front, 4-53
Insulation, Acstc, Cab, Leg, Rear, 4-53
Insulation, Acstc, Cab, Proj, Front, 4-53
Insulation, Acstc, Cab, Proj, Ls, 4-53
Insulation, Acstc, Cab, Proj, Rear, 4-53
Insulation, Acstc, Cab, Proj, Side, 4-53
Insulation, Acstc, Cab, Proj, Upper, 4-53
Insulation, Acstc, Door, Side, 4-49, 4-51
Insulation, Acstc, Front, Lower, 3-55
Insulation, Acstc, Side, Lower, .8t, 3-55
Insulation, S/Foam 1.0 Seal Brake Pedal, 2-151
Insulation, Sound Foam, 2-151
Int.Manifold, 5-15, 6-15
Isolator, 2-89
Isolator [Epr], 2-83
Isolator-Vibration .25-20, 2-103, 2-105
Isolator-Vibration .31-18, 2-135, 2-137, 2-139
Isolator-Vibration,60 Lb.Ratng, 2-187
Isolator, Box, Relay, 2-67, 2-79, 2-83, 2-87
Isolator, Mtg, Vaporizer, Rbr, 2-79
Isolator, Rbr, 2-109
Isolator, Rubber, 2-107
Isolator, Vac Fan, 2-167
Isolator, Vib, .50d, 2-13
Isolator, Vib, Bshg, 1.4d 0.3l .4b 0.65h, 2-169
Isolator, Vib, Bshg, 1.9d 0.9l .6b 1.16h, 2-37
Isolator, Vib, Flng, 1.3h .5b 2/.39h, 2-43, 2-45, 2-47, 2-49
Isolator, Vib, Flng, 2.0h .5b 2/.41h, 2-45, 2-47, 2-49
Isolator, Vib, Ring, 1.0d .25-20/.25-20, 2-107, 2-109
Isolator, Vib, Ring, 1.0d .31-18/.31-18, 2-165
Isolator, Vib, Ring, 1.4d 0.3l 0.8b, 2-169
Isolator, Vib, Ring, 1.9d 0.5l 1.3b, 2-37
Isolator, Vibration, 2-187

K

Keeper, Latch, Pane, 4-47, 4-49, 4-51
Key, 4-25, 4-27, 4-29, 4-34, 7-3, 7-11, 7-12
Key En, 4-5, 4-9, 4-15, 4-19
Key Set, 4-49, 4-51
Key Set,Switch Ku, 2-191
Key, Motor, Hyd, 4-31
Key, Round, 4-23
Key, Sq, 0.12 X 0.12, 0.50l, 2-135, 2-137, 2-139
Key, Square 0.12 0.12 00.50 LG, 4-35
Key, Woodruff, 4-32
Keychain, Rectangle, Parts & Service, 2-191
Kit-Attaching, 5-9, 6-9
Kit, Adaptor, Manifold, 2-76
Kit, Alarm, Backup, 3-27
Kit, Alternator, Hd, Gas/Lpg, 3-91
Kit, Brush, Alternator, 2-41
Kit, Ci, Alternator, Hd,Gas/Lpg,[Gm3.0l], 3-93
Kit, Ci, Drain Hose, A/C, 3-111
Kit, Connector, Coolant Sensor, 4-71, 4-73, 4-75, 4-77
Kit, Connector, Gas Injector, 4-75, 4-77
Kit, Connector, Govnr, 4-71, 4-73, 4-75, 4-77
Kit, Connector, Sensor, [Iat], 4-71, 4-73, 4-75, 4-77
Kit, Connector, Sensor, [Map], 4-71, 4-73
Kit, Fi, Cab, [97], 2-61
Kit, Gasket, Manifold, 2-76
Kit, Light, Flsh, Low, 3-19
Kit, Light, Strobe, Low, 3-23
Kit, Org, Injector And Reg, Gas, 4-75, 4-77
Kit, Org, Injector, Top And Bottom, Lpg, 4-71, 4-73
Kit, Reg, Gas Press, 4-75, 4-77
Kit, Repair, Fuelock, Mv 310-6, 2-121
Kit, Replmt, Controller, 4-71
Kit, Seal, Hyd, Motor, 4-31
Kit, Seal, Hyd, Pump, 4-23
Kit, Seal, Motor, Hyd, 4-31
Kit, Seal, Pump, 4-25
Kit, Signal, Turn, 3-31
Knob, Plastic, 2-175, 2-183
Knob, Rnd, 2.00d 0.65l M6, Plstc, 2-169
Knob, Rnd, 2.00d 0.84l M6, Plstc, 2-169
Knob, Rnd, Control, Heat-A/C, 3-63, 3-69, 3-71, 3-81, 3-85, 3-87
Knob,0.38-16,1.25Dia,Plastic, 3-97, 3-99

L

Label Set, Info & Hazard, 2-240
Label Set, Operational 800, 2-240
Label, Caution, 3-63, 3-69, 3-71
Label, Instr, Fltr Drain, 2-75
Label, Logo, 10.4L Sht/Clr [Tennant], 2-240
Label, Logo, 10.4l,Oval[Tennant,Blu/Grn], 2-240
Label, Model [800 Gray], 2-240
Label, Numerals 800, 2-240
Label, Opertnl, Fan, Hi/Med/Low, 3-63, 3-69, 3-71, 3-81, 3-85, 3-87
Label, Opertnl, Pull Heat, 3-63, 3-69, 3-71, 3-81, 3-85, 3-87
Label, Opertnl, Switch, On-off, 4-47
Label, Opertnl, Temp, 3-63, 3-69, 3-71
Label, Vac Wand, 3-97, 3-99
Lamp, 4-47
Lamp, 12VDC 55w, 3-27, 3-29, 3-51, 3-53
Lamp, 12vdc, 0.5a, 04cp [#1157], 2-7
Latch, 2-9, 2-11, 2-17, 2-19, 2-21, 2-23, 2-33, 2-179
Latch Assy, Door, 4-49, 4-51
Latch Assy, Lpg Tank Mtg,W/Nut, 2-119, 2-121, 2-123, 2-125
Latch Assy, Wndw [800 Cab], 4-47, 4-49, 4-51
Latch Kit, Wndw, Cab, Rear, 4-47
Latch, Bmpr, 2-35
Latch, Bolt, 2-19, 2-21, 2-23
Latch, Door, 3-107
Latch, Keeper, Pane [J-dak], 4-47
Latch, Keeper, Pane [J-dak], 4-49, 4-51
Latch, Tension, 4-59, 4-61, 4-63, 4-65
Leg Wldt, Bmpr, Se [800 Gray], 3-39
Leg Wldt, Bumper, Se, 3-38
Lens, Flashing Amb 12V, 3-19
Lens, Strobe Light, Amber, 3-23
Lens, Strobe Light, Blue, 3-15, 3-19, 3-23
Lens, Strobe Light, Red, 3-15, 3-19, 3-23
Lens, Strobe.Light,Amber, 3-11, 3-15
Lens, Strobe.Light,Blue, 3-11
Lens, Strobe.Light,Red, 3-11
Lens,Flashing Lite Fr207 Amber, 3-3, 3-7
Lens,Flashing Lite Fr207 Blue, 3-3, 3-7
Lens,Flashing Lite Fr207 Red, 3-3, 3-7
Lever, 5-9, 6-9
Lever, Brake, 2-151
Lifter, 7-3
Lifting Eye, 5-15, 6-15
Light Assy Mark/Yel 12V- . A, 3-31
Light Kit Flsh 800L Cab, 3-7
Light Kit Flsh 800L Ohg, 3-3
Light Kit Strobe 800L Cab, 3-15
Light Kit Strobe 800L Ohg, 3-11
Light Kit, Brush, Side, Ci [800gray], 3-53
Light Kit, Flsh, Cab, Ci [800 Gray], 3-9
Light Kit, Flsh, Ohg, Ci [800 Gray], 3-5
Light Kit, Flsh, Ped, Ci [800 Gray], 3-21
Light Kit, Revl, Cab, Ci [800l Gray], 3-17
Light Kit, Side Brush, 3-51
Light Kit, Strobe, Ohg, Ci [800l Gray], 3-13
Light Kit, Strobe, Ped, Ci [800l Gray], 3-25
Light, Check Eng, Amb, 14vdc, 2-191
Light, Dome 12V, 4-47
Light, Flashing Amb 12v-re, 3-19
Light, Flashing, Amber, 12V-Re, 3-3, 3-7
Light, Indicator 14V Red 1.2x0.7, 2-191
Light, Spot 12V, 32cp, 3-27, 3-29
Light, Spot, 12VDC 55w, 3-51, 3-53
Light, Strobe Amber 12v-re, 3-23
Light, Strobe, Amb, 12-48vdc [Led], 3-11, 3-13, 3-15, 3-17, 3-23, 3-25
Light, Strobe, Amb, 12-48vdc [Led] [Led], 3-3, 3-5, 3-7, 3-9, 3-19, 3-21
Light, Strobe.Amber 12V-Reworked, 3-11, 3-15

Link, 0.18, 1.5w 03.6l, 1/0.4h 1/0.3h, 2-109
Link, Connecting, 4-49, 4-51
Link, Eccentric, 2-37
Link, Feedback, 4-11
Link, Feedback En, 4-21
Link, Head, Vacuum, Rh, .50 1.50w 23.0l, 2-25
Link, Tension 2.4L, 3-67
Linkage Kit, Govnr, 2-61, 2-69
Lintel Wldt, Rear, 2-19
Lintel Wldt, Rear [800 B/Green], 2-19
Lock Assy, Door, 4-49, 4-51
Locknut, 5-23, 6-23
Lockwasher En, 4-3, 4-7, 4-13, 4-17
Louver, Adj, Heat-A/C, 3-63, 3-69, 3-71, 3-81, 3-85, 3-87
Lower Cover, 5-7, 6-7

M

Magnet, Drive Brush, 2-33
Maintenance Kit, 400HR 800/810 gas, 2-4
Maintenance Kit, 400HR 800/810 lpg, 2-4
Maintenance Kit, 800HR 800/810, 2-4
Maintenance Kit, Skirts, 2-4
Maintenance Kit, Skirts 800, 2-4
Manifold, Exhaust, 2-63, 2-65, 2-75, 2-80
Manifold, Exhaust [Gm3.0l], 2-67, 2-83, 2-87
Manifold, Gas, Relief, Valve, 2-117
Manifold, Intake, 2-63, 2-65, 2-75, 2-80
Manifold, Intake [2007], 2-67, 2-83
Manifold, Intake [Gm3.0l 2010], 2-67, 2-87
Manual Op/Mt 800G French, 3-114
Manual Control En, 4-21
Manual Op/Mt 800G Spanish, 3-114
Manual Pkg 800G, 3-114
Manual, Eng, Cd-Rom [Tier Ii,Gm3.0l], 3-114
Manual, Service 800/810, 3-114
Manual, Service FD (Lrg) 2.3L, 3-114
Manual, Service FD (Lrg) 2.5L, 3-114
Manual, Service, Eng, [Gm 3.0L], 3-114
Mirror Assembly, 3-57, 3-59
Mirror Kit, Brush, Side, Cab, Ci[800lgr], 3-59
Mirror Kit, Side Brush, 3-57
Mirror, Convex, 0.50d, 3-57, 3-59
Mirror,8.0 Round,Convex, 3-57, 3-59
Mixer , Lpg, 2-87
Module Kit, Ignition, Replmt [Ford 2.3l], 5-24
Module, Distributor, 7-5
Module, Ecu, Gas [Gm 3.0l], 2-65
Module, Ecu, Gas [Gm3.0l 2007], 2-67
Module, Ecu, Gas [Gm3.0L 2010], 2-67
Module, Ecu, Lpg [Gm 3.0l], 2-79
Module, Ecu, Lpg [Gm3.0l 2007], 2-83
Module, Ecu, Lpg [Gm3.0L 2010], 2-87
Molding, Trim (Gasoline only), 4-47
Molding, Trim 11-14Ga 4.0, 2-151
Molding, Trim, Extrusion, .062, 10.10l, 2-41
Molding, Trim, Pvc, .08-.11 01.0l, 2-7
Molding, Trim, Pvc, .08-.11 05.8l, 2-15
Molding, Trim, Pvc, .08-.11 08.5l, 2-13
Molding, Trim, Pvc, .08-.11 15.8l, 2-15
Molding, Trim, Pvc, .08-.11 26.5l, 2-13
Molding, Trim, Pvc, .18-.31 01.5l, 4-53
Motor-Hyd Gear (See Breakdowns), 2-145
Motor-Hyd Gear (See Breakdowns) (Replaced by 1068905), 2-145
Motor-Hyd Gear Ex (See Breakdowns), 2-187
Motor-Hyd Gear In (See Breakdowns), 2-145
Motor-Hyd Gear In (See Breakdowns) (Replaced by 9009503), 2-179
Motor-Hyd, Gear In 10.0 (See Breakdowns), 2-135, 2-137, 2-139
Motor, Ele, 14vdc 1600rpm 0.04hp, 2-37
Motor, Ele, Geared, 12Vdc, 3-109
Motor, Ele, Wiper, 12vdc, 4-47
Motor, Hyd Gear In 17.9 B 1500 (See Breakdowns) (Replaced by 9009502), 3-45
Motor, Hyd, (See Breakdowns) (Replaced by 9009502), 2-171
Motor, Hyd, Gear, [In] 29.9 B 3000, 4-31
Motor, Hyd, Gear, Ext 0.17 Lh 3000, 2-187
Motor, Hyd, Gear, Int 02.8 Bi-Dir 2500, 2-179
Motor, Hyd, Gear, Int 07.6 Bi-Dir 3000, 2-139
Motor, Hyd, Gear, Int 17.9 Bi-Dir 2500, 2-171, 3-45
Motor, Hyd, Gear, Int 29.9 Bi-Dir 3000, 2-145
Motor, Hydraulic, 4-32, 4-33, 4-34, 4-35
Motor, Propelling, 4-27, 4-29
Motor, Starting, Perm Mag, 12V, 5-9, 6-9
Mount, Cable Tie, 3-63, 3-69, 3-71, 3-111
Mount, Fltr, Remote, 2-59
Mount, Tie, 3-27, 3-29
Muffler, Catalytic [Gm 1.6/3.0], 2-107
Muffler, Catalytic [Gm 3.0l 2007], 2-109
Muffler, Catalytic [Gm 3.0l 2010], 2-109
Muffler, Exhaust, 2-103, 2-105, 3-113

N

Nameplate, Tennant, Domed, 10 Inch, 2-240
Nozzle, 7-11
Nut, 4-27, 4-29, 7-3, 7-9
Nut En, 4-3, 4-7, 4-13, 4-17
Nut Low Crown .62-18, 2-175
Nut M8-1.25, 5-15, 6-15
Nut-hx Jam M20x1.5 4 Pltd, 2-189
Nut-Hxlocnyln .31-24 Reg Pltd, 2-135, 2-137, 2-139
Nut-Hxslot 1.00-20 Pltd, 2-147
Nut-Low Crown .50-20 Pltd, 2-185
Nut, Adjustable, Lpg Tank Mtg, 2-119, 2-121, 2-123, 2-125
Nut, Cart., LNG CP, 4-43
Nut, Cart., LNG., 4-38
Nut, Cart., Sht, 4-39
Nut, Cart., SHT CP, 4-43
Nut, Conn Rod, 7-7
Nut, Conrod-8, 5-22, 6-22
Nut, Flng, .38-24, 2-53
Nut, Flng, M8, 2-83, 2-89
Nut, Hex, Flange, 3-41
Nut, Hex, Flange, M8 X 1.25, 2-175
Nut, Hex, Flng, .38-16, 2-50, 2-67, 2-83, 2-87
Nut, Hex, Flng, M10 X 1.5, 2-176, 2-179, 3-41, 3-47, 3-75
Nut, Hex, Flng, M10 X 1.50, 2-9, 2-11, 2-173, 3-57, 3-59
Nut, Hex, Flng, M12 X 1.75, 2-19, 2-143, 2-179
Nut, Hex, Flng, M5 X 0.80, 2-73
Nut, Hex, Flng, M6 X 1.0, 2-135, 2-137, 2-139, 2-167
Nut, Hex, Flng, M6 X 1.00, 2-17, 2-19, 2-23, 2-123, 2-125, 2-151, 2-153, 2-171, 2-192, 3-45, 3-55
Nut, Hex, Flng, M8 X 1.25, 2-13, 2-17, 2-19, 2-29, 2-45, 2-47, 2-49, 2-55, 2-57, 2-97, 2-101, 2-123, 2-125, 2-141, 3-3, 3-5, 3-11, 3-13, 3-93
Nut, Hex, Jam, .25-28, 2-153
Nut, Hex, Jam, .38-16, 2-13
Nut, Hex, Lock, 3-31
Nut, Hex, Lock, .25-20, Nl, 2-59, 2-117, 2-187
Nut, Hex, Lock, .25-20, Nl, Ss, 2-153
Nut, Hex, Lock, .31-24, Nl, 3-51, 3-53
Nut, Hex, Lock, .38-16, Nl, 2-45, 2-47, 2-49, 2-55, 2-57, 2-123, 2-125, 2-135, 2-137, 2-139, 2-151, 2-179, 2-187, 3-57, 3-59, 3-75, 3-79, 3-93, 3-95
Nut, Hex, Lock, .38-16, Nl, Ss, 3-75
Nut, Hex, Lock, .38-16, Nl, Thin, 2-151
Nut, Hex, Lock, .50-13, Nl, 2-145, 2-173, 3-47
Nut, Hex, Lock, .50-13, Nl, Ss, 2-179
Nut, Hex, Lock, .75-10, Nl, 2-145
Nut, Hex, Lock, M 6 X 1.0, Nl, 2-141
Nut, Hex, Lock, M08 X 1.25,Nl, 3-51, 3-53
Nut, Hex, Lock, M10 X 1.5, Nl, 2-19, 2-33, 2-50, 2-135, 2-137, 2-139, 2-151, 2-153, 2-171, 2-173, 2-176, 2-185, 3-41, 3-45, 3-47, 3-76, 3-79
Nut, Hex, Lock, M10 X 1.5, Nl, Ss, 2-175, 3-41, 3-75, 3-79
Nut, Hex, Lock, M12 X 1.75, Nl, 2-13, 2-45, 2-47, 2-49
Nut, Hex, Lock, M16 X 2.0, Nl, 3-42
Nut, Hex, Lock, M5 X 0.80, Nl, 3-3, 3-5, 3-7, 3-9, 3-11, 3-13, 3-15, 3-17, 3-19, 3-21, 3-23, 3-25

Nut, Hex, Lock, M6 X 1.0, Nl, 2-95, 2-99, 2-175, 3-41
Nut, Hex, Lock, M6 X 1.00, Nl, 2-9, 2-11, 2-15, 2-19, 2-21, 2-23, 2-33, 2-37, 2-133, 2-139, 2-185, 2-187, 2-189, 2-192, 3-45
Nut, Hex, Lock, M6 X 1.00, Nl, Ss, 2-153, 4-47
Nut, Hex, Lock, M8 X 1.25, Nl, 2-15, 2-29, 2-97, 2-101, 2-123, 2-125, 2-135, 2-137, 2-139, 2-151, 2-173, 2-176, 2-179, 2-185, 2-187, 3-3, 3-5, 3-7, 3-9, 3-11, 3-13, 3-15, 3-17, 3-42, 3-47, 3-75, 3-79, 3-95
Nut, Hex, Lock, M8 X 1.25, Nl, Ss, 2-29, 2-31
Nut, Hex, M10 X 1.50 [Stover], 2-109
Nut, Hex, Std, .25-20, 2-67, 2-83, 2-87, 2-107, 2-109
Nut, Hex, Std, .31-18, 2-135, 2-137, 2-139, 2-165, 2-187
Nut, Hex, Std, .31-18, Ss, 3-57, 3-59
Nut, Hex, Std, .38-16, 2-105, 2-107, 2-109
Nut, Hex, Std, .44-14, 5, 2-9, 2-11
Nut, Hex, Std, .62-18, 2-183
Nut, Hex, Std, .75-16, 2-145
Nut, Hex, Std, #10-24, 2-45, 2-47, 2-49
Nut, Hex, Std, M05 X 0.8, 2-121
Nut, Hex, Std, M08 X 1.25, 3-75
Nut, Hex, Std, M10 X 1.5, 3-47
Nut, Hex, Std, M10 X 1.5, Ss, 3-47
Nut, Hex, Std, M10 X 1.50, 2-151, 2-173
Nut, Hex, Std, M10 X 1.50, Ss, 2-173
Nut, Hex, Std, M12 X 1.75, 2-19, 2-21, 2-23, 2-29, 2-153
Nut, Hex, Std, M20 X 2.50, 8, 2-145
Nut, Hex, Std, M4 X 0.7, 8, 2-115
Nut, Hex, Std, M4 X 0.70, 8, 2-117
Nut, Hex, Std, M5 X 0.8, 8, 2-115
Nut, Hex, Std, M5 X 0.80, 8, 2-45, 2-47, 2-49, 2-117
Nut, Hex, Std, M8 X 1.25, 2-23, 2-151, 2-173, 3-41, 3-47
Nut, Hex, Stover, M10 X 1.5, 2-107
Nut, Hex, Stover, M8, 2-139
Nut, Jam, 4-3, 4-7, 4-13, 4-17
Nut, Low Crown, .62-18, 2-183
Nut, M6, 5-7, 6-7
Nut, Manifold, Exhaust, 2-63, 2-65, 2-75, 2-79
Nut, Motor, Hyd, 4-31
Nut, Slotted Hex, 4-32
Nut, U, M6 X 1.00, 2-19
Nut, Valve, Cartridge, 4-79, 4-81, 4-82
Nut, Wheel Lug, 2-145
Nut, Wheel Lug, 9/16-18, 2-147
Nut,Flng,M05-0.8, 2-87
Nut,Lock-Special 2.16-18Uns, 2-145
Nut,M10, 5-11, 6-11
Nut,Wing .44-20 Special, 2-91, 2-93, 2-95, 2-99
Nut&Washer,M8, 5-9, 6-9

O

O-Ring Gland, 2-155
O-Ring-2.250, 5-11, 6-11
O-Ring, Water Pump Adaptor, 5-23, 6-23
O-Ring,2.375, 5-11, 6-11
Ohg Kit, Ci [800l Gray], 3-35
Oil Pan, 7-9
Oil Pan Assy, 5-11, 6-11
Oil Pan Spacer, 5-11, 6-11
Oil Pickup Tube, 5-11, 6-11
Oil Plug, 5-11, 6-11
Oil Pmp Sprkt, 5-11, 6-11
Oil Pump, 5-11, 6-11
Oil Seal, Front, 5-5, 5-13, 5-19, 6-5, 6-13, 6-19
Oil, Hyd [El, Iso 100, 01gal], 2-4
Oil, Hyd [El, Iso 100, 05gal], 2-4
Oil, Hyd [El, Iso 32, 01gal], 2-4
Oil, Hyd [El, Iso 32, 05gal], 2-4
Orifice, Valve En, 4-3, 4-7, 4-13, 4-17
Outer Cover, 5-7, 6-7
Outlet For engine serial numbers (004937-006999), 7-3
Output Shaft Assembly, 4-32

P

Pad, 2-151
Pad, Rbr, Floormat, .44 27.0w 28.3l, 2-13
Paint, Airdry, Blk, 12oz, 2-4
Paint, Airdry, Gray, 12oz, 2-4
Paint, Airdry, Iron Gray, 12oz, 2-4
Paint, Airdry, Off-White, 12oz, 2-4
Paint, Airdry, Teal, 12oz, Solid, 2-4
Pane Assy, Cab, Lh Side, 4-47
Pane Assy, Door, Cab, Rh Side, 4-49, 4-51
Pane, Glass, Cab, 4-47
Pane, Glass, Door, 4-49, 4-51
Pane, Glass, Windshield, 4-47
Panel, 3-3, 3-7, 3-11, 3-15
Panel Wldt, Access, Floor, 2-153
Panel Wldt, Access, Floor [800 Gray], 2-153
Panel Wldt, Cover, Eng, Top, 2-19
Panel Wldt, Cover, Eng, Top[800 B/Green], 2-19
Panel Wldt, Headlight, 2-33
Panel Wldt, Headlight [800 B/Green], 2-33
Panel Wldt, Hopper, Floor, LH, 3-36
Panel Wldt, Hopper, Floor, RH, 3-36
Panel Wldt, Lintel [800 Gray], 2-17
Panel Wldt, Lntl, 2-17
Panel Wldt, Rear, Lh, 2-7
Panel Wldt, Rear, Lh [800 Gray], 2-7
Panel Wldt, Rear, Rh, 2-7
Panel Wldt, Rear, Rh [800 Gray], 2-7
Panel Wldt, Shakr, 2-37
Panel, Access, Eng, 27.0l X 10.8w, 2-13
Panel, Access, Eng, 27.0l X 10.8w [Gray], 2-13
Panel, Corner, Cover, Eng, 2-19
Panel, Corner, Cover, Eng [800 B/Green], 2-19
Panel, Cover, 3-97, 3-99
Panel, Cover, Brush Cntrl, Gas/Lpg[Gray], 2-175
Panel, Cover, Dash, 2-191
Panel, Cover, Instmt [800 Gray], 2-191
Panel, Deflector, Dirt, Lh, 2-29
Panel, Deflector, Dirt, Rh, 2-29
Panel, Duct, Vacuum, 2-19
Panel, Hppr, Bottom, Lh, 2-29
Panel, Hppr, Bottom, Lh [800 B/Green Ss], 3-37
Panel, Hppr, Bottom, Lh [800 B/Green], 2-29
Panel, Hppr, Bottom, Rh, 2-29
Panel, Hppr, Bottom, Rh [800 B/Green Ss], 3-37
Panel, Hppr, Bottom, Rh [800 B/Green], 2-29
Panel, Louver, 2-21
Panel, Mtg, Adapter, Water Pump [Ford], 2-41
Panel, Oprtr Station, W/ Label,[800l], 2-13
Panel, Oprtr Station, W/ Label[800 Gray], 2-13
Panel, Perma-Filter, Upper, 2-29
Panel, Side, Fuel Filler, Lpg [Gray], 2-13
Panel, Side, Lpg [800l], 2-13
Panel, Spacer, Eng Mtg, Fr Rep.Bynone, 2-43
Pcv Vlv Asy, 5-3, 6-3
Pedal Wldt, 2-151
Pedal Wldt, Brake [800 Gray], 2-151
Pedal, Propel, Lower, W/ Tread, 2-153
Pedal, Propel, Lower, W/Tread [800 Gray], 2-153
Pedal, Propel, Upper, W/ Tread, 2-153
Pedestal Wldt, Light, 3-19, 3-23
Pedestal Wldt, Light [800 Gray], 3-21, 3-25
Pin, 3-47, 4-37, 7-5, 7-7, 7-9, 7-11
Pin Assy, .312X3.0 W/Lanyard, 3-45
Pin Assy, Side Brush W/ Clip, 2-171
Pin Wldt, 2-25, 2-27, 2-31
Pin Wldt, Latch, 2-33
Pin Wldt, Pivot, Brush, Side, 2-173
Pin, 1.00d 04.5l, 1/.38h, 1/M8x1.25, Stl, 2-27
Pin, 1.25d 05.4l, 1/.44h, Stl, 2-25
Pin, 1.50d 06.9l, 1/.44h, Stl, 2-25
Pin, 1.50d 07.4l, 1/.44h, Stl, 2-25
Pin, 1/4X.32, 5-19, 6-19
Pin, Clevis .375D X 1.000 Lg, 2-151
Pin, Clevis, 0.19d X 0.63l, 2-169
Pin, Clevis, 0.25d X 0.75l, 2-153
Pin, Clevis, 0.25d X 1.00l, 2-153
Pin, Clevis, 0.31 D X 0.75l, 2-135
Pin, Clevis, 0.37d X 1.31l, 2-153
Pin, Clevis, 0.37d X 4.50l, 2-153
Pin, Clevis, 0.50d X 2.25l [1141 Stl], 2-31
Pin, Clevis, 0.50d X 3.50l, 2-169

Pin, Clevis, 0.50d X 4.50l, 2-153
Pin, Cntrl Assy En, 4-21
Pin, Cotter .094X1.00, 2-175
Pin, Cotter, .094 X 0.75, 2-17
Pin, Cotter, .109 X 1.00, 2-37
Pin, Cotter, .125 X 0.75, 2-153
Pin, Cotter, .125 X 1.00, 2-31
Pin, Cotter, .125 X 2.00, 2-147
Pin, Cotter, Hair, 0.31d .058 Wir, 2-153, 2-169
Pin, Grvd, 1.25d 03.50l, 2-27
Pin, Hair Cotter, 0.69 D .092 Wir, 2-135
Pin, Headed, 4-11
Pin, Headed En, 4-21
Pin, Hitch, .500d X 1.00l, Pl, 2-7
Pin, Latch, 4-49, 4-51
Pin, Retainer, 2-79
Pin, Roll, .187 Dia. X .56, 4-47
Pin, Roll, .312d X 0.75l, .312/.318, 2-43
Pin,Clevis,0.37 Dia.X 2.12 Lg, 2-175, 3-41
Pin,Clevis,0.50 Dia.X 2.00 Lg, 2-181
Pin,Roll,.18Odx1.62L,.187/.192, 3-97, 3-99
Pipe, 2-75
Pipe Wldt, Exhaust, Gas/Lpg, 2-103
Pipe, Adapter [Gm30.0l], 2-50
Pipe, Nipple [Gm3.0l], 2-49
Piston, 4-31
Piston Pin, 6-22
Piston, .020" O.S., 7-7
Piston, Hi-limit, 7-7
Piston, Servo, 4-3, 4-7, 4-13, 4-17
Piston, STD, 7-7
Piston, Std., 5-22, 6-22
Pivot Wldt, Wheel, 2-145
Planet Bearing, 5-9, 6-9
Plate, 2-175, 3-41, 3-97, 3-99, 3-101, 4-27, 4-29, 5-19, 6-19
Plate & Brg, 5-9, 6-9
Plate Kit, 7-12
Plate Wldt, 2-175, 3-41
Plate Wldt, Inlet, Fuel (LPG Only), 3-55
Plate Wldt, Skirt, 3-101
Plate Wldt, Skirt [Gray], 3-103
Plate Wldt, Vac Door, 3-97, 3-99
Plate Wldt, Wheel Lock (CE Only), 2-149
Plate Wldt., 2-119, 2-121, 2-123, 2-125
Plate-Cover, 2-175
Plate, Adapter, 4-23
Plate, Adaptor, 4-25
Plate, Adj, Brush, 2-183
Plate, Angle, 2-175, 3-41, 3-47
Plate, Back, 4-23
Plate, Back, Pump, Hyd, 4-25
Plate, Backing, 4-69
Plate, Circuit Breaker, 2-192
Plate, Circuitbreaker [800 Gray], 2-192
Plate, Cover, 2-175
Plate, Cover En, 4-3, 4-7, 4-13, 4-17
Plate, Drive, 2-45, 2-47, 2-49
Plate, Front, 4-23
Plate, Front, Pump, Hyd, 4-25
Plate, Injector Mtg, W/ Screw, 4-71, 4-73, 4-75, 4-77
Plate, Latch, 3-97, 3-99
Plate, Limiter, Spd, 2-153
Plate, Motor, Hyd, 4-31
Plate, Mounting, Rfs Control, 3-109
Plate, Mounting, Tank, Gas, 2-111
Plate, Mounting, Vac Door, 3-97, 3-99
Plate, Mtg, 2-119, 2-121, 2-123, 2-125
Plate, Mtg [Epr], 2-89
Plate, Mtg, Check Valve, 3-45
Plate, Mtg, Check Valve [Gray], 3-45
Plate, Mtg, Latch, 2-179
Plate, Mtg, Reg, 2-63, 2-75
Plate, Mtg, Relay, 2-192
Plate, Mtg, Steering Boot, 2-189
Plate, Mtg, Switch, A/C, 3-63, 3-69, 3-71, 3-81, 3-85, 3-87
Plate, Mtg, Tank, Gas, 2-113, 2-115, 2-117
Plate, Mtg, Valve, Solenoid, 2-167
Plate, Mtg, W/ Screw, [Ecu], Gas, 4-75
Plate, Mtg, W/ Screw, [Ecu], Lpg, 4-71
Plate, Pivot, Wheel, 2-145
Plate, Retainer, 3-101, 3-103
Plate, Retainer, Foam, 2-187
Plate, Retainer, Pin, 2-25, 2-27
Plate, Seal, 2-179
Plate, Shield, Heat, 2-55, 3-75, 3-93
Plate, Shield, Heat, W/Label, 2-129, 2-131
Plate, Shim, 4-49, 4-51
Plate, Shutter, 3-109
Plate, Side Brush Roller, 2-175
Plate, Side Brush, Roller, 3-41
Plate, Skirt, Sbdc [800 Gray], 3-103
Plate, Spacer, 2-27
Plate, Sppt, 4-47
Plate, Spring - Side Brush, 2-185
Plate, Strike, 2-19
Plate, Thrd, 4-49, 4-51
Plate, Vac Fan, 2-185
Plate, Valve, Motor, Hyd, 4-31
Plate, Wear, 4-37
Plug, 4-11, 4-31, 5-7, 5-19, 6-7, 6-19, 7-3, 7-7, 7-9
Plug .06 O/S, 5-3, 6-3
Plug & O-Ring En, 4-41
Plug #2, 4-43
Plug #8, 4-3, 4-7, 4-13, 4-17
Plug 1/4 Npt, 5-3, 5-6, 6-3, 6-6
Plug 3/8 Npt, 5-3, 5-15, 6-3, 6-15
Plug Assembly, 4-27, 4-29
Plug Assembly En, 4-41
Plug Assy, 4-31
Plug Assy,Byd En, 4-41
Plug En, 4-5, 4-9, 4-15, 4-19, 4-21
Plug Gage #4, 4-43
Plug Gage #6, 4-41, 4-43
Plug Kit, Controlbox, 2-61
Plug S/A En, 4-3, 4-7, 4-13, 4-17
Plug Weld, Brush Drive, Sweep, 2-179
Plug Wldt, Drive, Brush, 2-179
Plug Wldt, Idler, 2-179
Plug-Std 2.078, 5-3, 6-3
Plug, #2 O-Ring, 4-39
Plug, 1.50 Cup, 5-3
Plug, 1/2Npt, 5-15, 6-15
Plug, Drain, 3-97, 3-99
Plug, Hole, Injector, 2-83, 2-87
Plug, Hole, Rnd, 0.24h 0.5l , Brb, 2-19
Plug, Hole, Rnd, 0.25h 0.8l, Brb, Nyl, 2-7, 2-9, 2-11
Plug, Hole, Rnd, 0.38h .03-.12, Nyl[Wht], 2-13
Plug, Hole, Rnd, 0.75h .03-.12, Blk Nyl, 2-13
Plug, Hole, Rnd, 0.88h .03-.12, Blk Nyl, 2-19
Plug, Hole, Rnd, 1.25h .03-.12, Blk Nyl, 2-13
Plug, O-Ring, 4-23, 4-25, 4-29
Plug, Plstc, Sq, 4-67, 4-69
Plug, Rbr, Rnd, 4-67, 4-69
Plug, Tube, 2-179
Plug,#12 O-Ring Ph, 4-3, 4-7, 4-13, 4-17
Plug,1.50 Cup, 5-6, 6-6
Plugbtn .62H .03-.12 Blacknyl, 2-192
Plugbtn .62H .03-.12 Blacknyl, 4-63, 4-65
Plugbtn .88H .03-.12 Blacknyl, 4-63, 4-65
Plugbutton, 2-191, 3-33, 3-35
Plunger En, 4-41
Pole Piece, 7-5
Poppet, 4-31
Poppet En, 4-5, 4-9, 4-15, 4-19, 4-41
Poppet, Pump, Hyd, Gear, 4-31
Pulley - Cable, 1.5 Dia, 3-41
Pulley Assy, Cable, 1.5 Dia, 2-175
Pulley, Alternator, 2-41
Pulley, Fan, 2-53, 2-55, 2-57
Pump, 7-9
Pump-Hyd Gear Ex (See Breakdowns), 2-155
Pump-Hyd Piston V (See Breakdowns), 2-155
Pump, Fuel, 2-111, 2-115, 2-117
Pump, Fuel, Gas, 2-113
Pump, Hyd, 4-23
Pump, Hyd Piston V 2.48 (See breakdowns), 3-112
Pump, Hyd, Gear, [Ex3] 0.66 [R] 3000, 4-25

R

Race, Bearing, 4-37
Race, Bearing Ce, 4-3, 4-7, 4-13, 4-17
Race, Thrust, 4-32, 4-33
Radiator, 2-135, 2-137, 2-139
Rear Plate, 5-17, 6-17
Rectifier, Alternator, 2-41
Regulator, 2-75, 2-89
Regulator [Ep], 2-83
Regulator, Alternator, 12vdc, 2-41
Regulator, Lpg, 2-79

Regulator, Press, Electronic [Epr], 2-87
Reinforcement, 7-3
Relay 12Vdc 40A Spdt, 3-19, 3-21, 3-23, 3-25
Relay, 12vdc, 20a, Spdt, 2-225, 2-227, 2-228
Relay, 12vdc, 40a, Spdt, 2-225, 2-227, 2-228
Relay, 12vdc, 40a, Spdt N/O, 3-63, 3-69, 3-71, 3-81, 3-85, 3-87
Relay, Shrouded, 12 Vdc, 2-192, 3-109
Relay, Shrouded, 12V, 3-3, 3-5, 3-7, 3-9, 3-11, 3-13, 3-15, 3-17
Relief Valve Sa En, 4-5, 4-9, 4-15, 4-19
Repair Info, Motor, 4-29, 4-33
Repair Info, Pump, 4-23
Repair Info,Mtr Cl, 4-31
Repair Info,Pmp En, 4-5, 4-9, 4-15, 4-19
Repair Info,Scu Cl, 4-37
Repair Kit, Mixer, 2-87
Replacement Kit, Roller, Side Brush Lift, 2-175, 3-41
Replm Kit, Case, 2-191
Replm Kit, Cir Board, 2-191
Replm Kit, Flywheel, 5-17
Replm Kit, Hourmeter, 2-191
Replm Kit, Instr Panel, 2-191
Replm Kit, Lamp, Backlighting (Set of 8), 2-191
Replm Kit, Lamp, Fault (Set of 8), 2-191
Replm Kit, Seal, 2-191
Replm Kit, Touch Panel, 2-191
Restrictor, Jet, Coolant, 2-79
Retainer, 5-9, 6-9, 7-5
Retainer, Blade, Deflector, 2-7
Retainer, Blade, Deflector, Front, 2-29
Retainer, Front, Motor, Hyd, 4-31
Retainer, Frt, 4-27, 4-29
Retainer, Ring, 2-27
Retainer, Seal, Dust, .12 X 0.8w X 48.4l, 2-29
Retainer, Seal, Pan Top, 2-7
Retainer, Shield, Dust, Lh, 2-7
Retainer, Shield, Dust, Rh, 2-7
Retainer, Skirt, .07, 2-9, 2-11
Retainer, Skirt, .08, 1.5w X 07.5l, 2-9, 2-11
Retainer, Skirt, .12, 1.0w X 18.5l, Blk, 2-9, 2-11
Retainer, Skirt, .12, 1.0w X 21.7l,White, 2-29
Retainer, Skirt, .12, 1.2w X 15.7l, 2-9, 2-11
Retainer, Skirt, .12, 2.0w X 54.5l, 3-103
Retainer, Skirt, .12, 3.2w X 48.2l, Blk, 2-29
Retaining Ring, 5-9, 6-9
Retaining Rng En, 4-41
Retnr.Gear, 5-9, 6-9
Rfs Kit, 3-109
Ring, 7-12
Ring Kit, .030" O.S., 7-7
Ring Kit, Std, 7-7
Ring Set,Std., 5-22, 6-22
Ring Wldt, Mtg, Fltr, 2-37
Ring Wldt, Shakr, 2-37
Ring-Drv.Stop, 5-9, 6-9
Ring, Isolator, Outer Rbr, 2-135, 2-137, 2-139, 2-185
Ring, Retainer, 4-37
Ring, Retainer, Lock, 2-145
Ring, Retaining, 4-11
Ring, Retaining En, 4-5, 4-9, 4-15, 4-19, 4-21
Ring, Retaining, Ext, 0.50d, Ss, 2-153
Ring, Retaining, Ext, 1.12d, 2-37
Ring, Retaining, Ext, 1.50d, Hd, 2-25
Ring, Rubber, 2-91, 2-93, 2-95, 2-99
Ring, Wndw, Cab, Rear, 4-47
Ring,Retain,Ex,0.50Od,Heavy Dt, 2-189
Rivet, Blind, .125d X 0.32 X .25d, Stl, 3-109
Rivet, Blind, .196d X 0.62 X .38d, Alm, 2-21
Rivet, Plastic, 3-55
Rivet, Plastic .250Dx.898, 2-189
Rod, 5-19, 6-19, 7-3
Rod Wldt, Push, Brake, 2-151
Rod-End, 0.25-28rh Fem 0.25b [Ptfe], 2-153
Rod-End, 1.31-16 Fem 1.4h, 2-27
Rod-Thread, 2End M08X1.25X10Lg, 2-151
Rod, Hanger, Isolator, 2-107, 2-109
Rod, Latch, Steering, Tilt, 2-189
Rod, Thrd, 2 End .50-13 05.75, 2-181
Rod, Thread, 2-175, 2-183
Roll Pin En, 4-5, 4-9, 4-15, 4-19
Rotating Kit, 4-3, 4-7, 4-13, 4-17
Rotator, 7-3
Rotor, 7-5

S

Scr Flt M8x1.25 20, 2-167
Scr Hex .38-16X0.75, 2-189
Scr-soc .50-13x2.75 Alloypltd, 2-145
Scr-soc M12x1.75 60, 2-145
Scr&Wash M6, 5-19, 6-19
Scr&Wsh,M6X15.0M, 5-21, 6-21
Scr&Wsh,M6X22.5, 5-7, 6-7
Screen Kit, Door, Side, Modif, 2-23
Screen, Fltr, 10.0 X, 2-37
Screen, Muffler, 2-103, 2-105
Screen, w/Suction Pipe, 7-9
Screen, w/Tube, 7-9
Screw, 2-53, 2-75, 4-33, 7-9
Screw, .38-16 X 1.00, 2-67
Screw, .38-24 X 4.00, 2-53
Screw, Cap, 4-3, 4-7, 4-13, 4-17, 4-23, 4-27, 4-29
Screw, Cap En, 4-3, 4-5, 4-7, 4-9, 4-13, 4-15, 4-17, 4-19
Screw, Cap, Motor, Hyd, 4-25, 4-31
Screw, Flt, M10 X 1.5 X 25, 10.9, 3-47
Screw, Flt, M10 X 1.5 X 35, 10.9, 3-47
Screw, Flt, M5 X 0.8 X 16, 10.9, 2-179
Screw, Flt, Soc, .25-20 X 1.00, Al, 2-187
Screw, Flt, Soc, .38-16 X 1.75, Al, 2-187
Screw, Flt, Soc, .50-13 X 2.00, Al, 2-173, 3-47
Screw, Flt, Soc, M10 X 1.50 X 25, 10.9, 2-173
Screw, Flt, Soc, M10 X 1.50 X 35, 10.9, 2-173
Screw, Flt, Soc, M8 X 1.25 X 30, Ss, 2-29
Screw, Hex m06, 3-57, 3-59
Screw, Hex m08, 3-41
Screw, Hex, .25-20 X 0.50, G5, 2-45, 2-47, 2-49, 2-67, 2-83, 2-87
Screw, Hex, .25-20 X 0.75, G5, 2-67, 2-75, 2-83, 2-87
Screw, Hex, .25-20 X 0.75, Nl, 2-9, 2-11, 2-17, 2-23
Screw, Hex, .25-20 X 1.00, G5, 2-19, 2-59, 2-153, 4-49, 4-51
Screw, Hex, .25-20 X 1.25, G5, 2-67, 2-83, 2-87
Screw, Hex, .31-09 X 1.25, Wood, 2-5
Screw, Hex, .31-18 X 0.75, 5, 2-129, 2-131
Screw, Hex, .31-18 X 0.75, G5, 2-45, 2-47, 2-49
Screw, Hex, .31-18 X 1.00, G5, 2-55, 2-57
Screw, Hex, .31-18 X 1.25, G5, 2-53
Screw, Hex, .31-24 X 0.75, G5, 2-53, 2-55, 2-57
Screw, Hex, .38-16 X, 2-171
Screw, Hex, .38-16 X 0.75, 5, 3-93
Screw, Hex, .38-16 X 0.75, G5, 2-55, 2-57, 2-89, 2-165, 2-189, 3-57, 3-59
Screw, Hex, .38-16 X 1.00, 5, 3-93
Screw, Hex, .38-16 X 1.00, G5, 2-45, 2-47, 2-49, 2-55, 2-57, 2-83, 2-87
Screw, Hex, .38-16 X 1.00, Nl, 3-45
Screw, Hex, .38-16 X 1.25, G5, 2-45, 2-47, 2-49, 2-153, 3-79
Screw, Hex, .38-16 X 1.50, G5, 2-189
Screw, Hex, .38-16 X 2.00, 5, 2-135, 2-137, 2-139
Screw, Hex, .38-16 X 2.00, Fl, 2-45, 2-50
Screw, Hex, .38-16 X 2.25, 5, 3-75, 3-93
Screw, Hex, .38-16 X 2.25, G5, 2-53, 2-55, 2-57
Screw, Hex, .38-16 X 2.50, G5, 3-79, 3-95
Screw, Hex, .38-16 X 2.75, G5, 2-151
Screw, Hex, .38-16 X 3.00, G5, 2-123, 2-125
Screw, Hex, .38-16 X 4.00, 5, 3-75, 3-93
Screw, Hex, .38-16 X 4.00, G5, 2-55, 2-57, 2-123, 2-125, 3-79, 3-95
Screw, Hex, .38-24 X 1.50, 5, 3-75
Screw, Hex, .38-24 X 1.50, G5, 3-79
Screw, Hex, .50-13 X 1.25, G5, 2-155
Screw, Hex, .50-13 X 3.50, 5, 2-179
Screw, Hex, .62-18 X 0.31, 2-47, 2-50
Screw, Hex, .75-10 X 2.50, G5, 2-145

Screw, Hex, #08-32 X 0.38, Ss, 3-109
Screw, Hex, #08-32 X 0.38, Tcut, 2-109
Screw, Hex, 10-24 X 0.50, Ss, 2-53, 2-55, 2-57, 3-109, 4-49, 4-51
Screw, Hex, M 8 X 1.25 X 40, Fl, 3-75
Screw, Hex, M05 X 0.8 X 25, Ss, 2-121
Screw, Hex, M08 X 1.25 X 20, 8.8, 3-51, 3-53
Screw, Hex, M10 X 1.5, 2-17, 4-49, 4-51
Screw, Hex, M10 X 1.5 X 30, 8.8, 2-107
Screw, Hex, M10 X 1.5 X 45, 8.8, 2-107
Screw, Hex, M10 X 1.5 X 100, 8.8, 3-75
Screw, Hex, M10 X 1.5 X 110, 8.8, 3-79
Screw, Hex, M10 X 1.5 X 120, 8.8, Fl, 3-75
Screw, Hex, M10 X 1.5 X 130, 8.8, 3-75
Screw, Hex, M10 X 1.5 X 20, Ss, 3-47
Screw, Hex, M10 X 1.5 X 25, 8.8, 2-176, 2-179, 3-41, 3-47, 3-76
Screw, Hex, M10 X 1.5 X 25, Ss, Nl, 3-47
Screw, Hex, M10 X 1.5 X 35, 8.8, 2-109, 2-176, 3-41, 3-45, 3-47
Screw, Hex, M10 X 1.5 X 45, 8.8, 2-109
Screw, Hex, M10 X 1.5 X 50, 8.8, 2-185, 3-73, 3-89
Screw, Hex, M10 X 1.5 X 60, 8.8, 2-143
Screw, Hex, M10 X 1.5 X 80, 8.8, 2-176, 3-42
Screw, Hex, M10 X 1.5 X 90, 8.8, 2-176, 3-42
Screw, Hex, M10 X 1.5 X 90, 8.8, Fl, 3-47
Screw, Hex, M10 X 1.50 X 120, 8.8, Fl, 2-173, 3-47
Screw, Hex, M10 X 1.50 X 20, Nl, Ss, 2-25, 2-27
Screw, Hex, M10 X 1.50 X 20, Ss, 2-173
Screw, Hex, M10 X 1.50 X 25, 8.8, 2-9, 2-11, 2-173, 3-79
Screw, Hex, M10 X 1.50 X 25, Nl, Ss, 2-173
Screw, Hex, M10 X 1.50 X 25, Ss, 2-37, 3-7, 3-9, 3-15, 3-17
Screw, Hex, M10 X 1.50 X 30, 8.8, 2-17, 2-19, 2-50
Screw, Hex, M10 X 1.50 X 30, Ss, 2-175, 3-41
Screw, Hex, M10 X 1.50 X 35, 8.8, 2-17, 2-37, 2-50, 2-151, 2-171, 2-173
Screw, Hex, M10 X 1.50 X 40, 8.8, 2-151, 2-153
Screw, Hex, M10 X 1.50 X 90, 8.8, 2-33, 3-57, 3-59
Screw, Hex, M10 X 1.50 X 90, 8.8, Fl, 2-173
Screw, Hex, M12 X 1.75 X 25, 8.8, 2-19
Screw, Hex, M12 X 1.75 X 30, 8.8, 2-19, 2-179
Screw, Hex, M12 X 1.75 X 35, 8.8, 2-50, 2-179
Screw, Hex, M12 X 1.75 X 40, 8.8, 2-17, 2-143, 2-153
Screw, Hex, M12 X 1.75 X 60, 8.8, 2-13, 2-29, 2-45, 2-47, 2-49
Screw, Hex, M12 X 1.75 X 70, 8.8, 2-31, 2-49
Screw, Hex, M16 X 2.0 X 70, 8.8, Fl, 3-42
Screw, Hex, M20 X 2.5 X 60, 8.8, 2-145
Screw, Hex, M20 X 2.5 X 70, 8.8, 2-145
Screw, Hex, M4 X 0.7 X 6, 8.8, 3-75, 3-93
Screw, Hex, M4 X 0.7 X 6, 8.8, 3-79, 3-95
Screw, Hex, M4 X 0.70 X 12, 8.8, 2-187, 3-27, 3-29
Screw, Hex, M5 X 0.80 X 10, Fl, 2-67, 2-87
Screw, Hex, M5 X 0.80 X 16, 8.8, 3-3, 3-5, 3-7, 3-9, 3-11, 3-13, 3-15, 3-17, 3-19, 3-21, 3-23, 3-25
Screw, Hex, M5 X 0.80 X 16, Fmg, 2-19
Screw, Hex, M5 X 0.80 X 16, Ss, 2-191
Screw, Hex, M5 X 0.80 X 25, Ss, 2-179
Screw, Hex, M6 X 1.0 X 35, 8.8, 2-141
Screw, Hex, M6 X 1.0 X 10, 8.8, 2-133
Screw, Hex, M6 X 1.0 X 12, Fmg, 3-109
Screw, Hex, M6 X 1.0 X 16, 8.8, 2-123, 2-125
Screw, Hex, M6 X 1.0 X 20, 8.8, 2-137, 2-139, 2-167, 2-175, 2-185
Screw, Hex, M6 X 1.0 X 20, 8.8, Nl, 2-179
Screw, Hex, M6 X 1.0 X 20, Fmg, 3-45, 3-69, 3-71, 3-73, 3-85, 3-87, 3-89
Screw, Hex, M6 X 1.0 X 25, 8.8, 2-95, 2-99, 2-133, 3-45
Screw, Hex, M6 X 1.0 X 50, 8.8, 2-97, 2-101, 2-117
Screw, Hex, M6 X 1.0 X 60, 8.8, 2-175, 3-41
Screw, Hex, M6 X 1.00 X 12, 8.8, 2-67, 2-87, 2-89
Screw, Hex, M6 X 1.00 X 12, Fmg, 2-29
Screw, Hex, M6 X 1.00 X 16, 8.8, 2-19, 2-73, 2-187, 2-191, 2-192
Screw, Hex, M6 X 1.00 X 16, Nl, Ss, 2-189
Screw, Hex, M6 X 1.00 X 20, 8.8, 2-13, 2-15, 2-19, 2-23, 2-139, 2-151, 2-153, 2-189, 2-192, 3-19, 3-21, 3-23, 3-25, 3-27, 3-29, 3-55
Screw, Hex, M6 X 1.00 X 20, 8.8, Nl, 2-33
Screw, Hex, M6 X 1.00 X 20, Fmg, 2-171
Screw, Hex, M6 X 1.00 X 25, 8.8, 2-9, 2-11, 2-13, 2-17, 2-19, 2-171
Screw, Hex, M6 X 1.00 X 35, 8.8, 2-9, 2-11
Screw, Hex, M6 X 1.00 X 35, Ss, 2-153
Screw, Hex, M6 X 1.00 X 45, 8.8, 2-67
Screw, Hex, M6 X 1.00 X 60, 8.8, 3-45
Screw, Hex, M6 X 1.00 X 90, 8.8, 2-187
Screw, Hex, M8 X 1.00 X 16, 10.9, 2-43
Screw, Hex, M8 X 1.25 X 16, 8.8, 2-107
Screw, Hex, M8 X 1.25 X 20, 8.8, 2-107, 2-141, 3-75
Screw, Hex, M8 X 1.25 X 25, 8.8, 2-141, 3-75, 3-93
Screw, Hex, M8 X 1.25 X 16, 8.8, 2-33, 2-55, 2-151, 3-93
Screw, Hex, M8 X 1.25 X 16, Ss, 3-3, 3-5, 3-7, 3-9, 3-11, 3-13, 3-15, 3-17
Screw, Hex, M8 X 1.25 X 20, 8.8, 2-13, 2-17, 2-19, 2-23, 2-31, 2-33, 2-109, 2-117, 2-123, 2-125, 2-135, 2-137, 2-139, 2-143, 2-153, 2-175, 2-185, 3-3, 3-5, 3-11, 3-13, 3-41, 3-76
Screw, Hex, M8 X 1.25 X 20, Nl, Ss, 2-59, 2-153
Screw, Hex, M8 X 1.25 X 20, Ss, 2-29
Screw, Hex, M8 X 1.25 X 25, 8.8, 2-13, 2-15, 2-31, 2-135, 2-137, 2-139, 2-189, 3-93
Screw, Hex, M8 X 1.25 X 25, Fmg, 3-57, 3-59
Screw, Hex, M8 X 1.25 X 25, Ss, 2-176, 3-41
Screw, Hex, M8 X 1.25 X 30, 8.8, 2-109, 2-175, 2-185, 2-187, 3-41, 3-75
Screw, Hex, M8 X 1.25 X 30, Ss, 2-29
Screw, Hex, M8 X 1.25 X 35, 8.8, 2-15
Screw, Hex, M8 X 1.25 X 40, 8.8, 2-173, 2-175, 3-47
Screw, Hex, M8 X 1.25 X 40, 8.8, Fl, 3-79, 3-95
Screw, Hex, M8 X 1.25 X 50, 8.8, 2-145
Screw, Hex, M8 X 1.25 X 60, 8.8, 2-176, 2-179, 3-42
Screw, Hex, M8 X 1.25 X 70, 8.8, 2-151
Screw, M6 X 10mm, 2-67, 2-83
Screw, Pan, M04, 3-31
Screw, Pan, M5 X 0.80 X 10, 4.8, 3-109
Screw, Pan, Phl, M3 X 0.50 X 16, 4.8, 2-191
Screw, Pan, Phl, M4 X 0.70 X 20, 4.8, 2-191
Screw, Pan, Phl, M5 X 0.80 X 10, 4.8, 2-191
Screw, Pan, Phl, M5 X 0.80 X 16, 4.8, 4-49, 4-51
Screw, Pan, Phl, M6 X 1.0 X 20, Blk, 4-47
Screw, Pan, Phl, M6 X 1.00 X 16, 4.8, 2-139
Screw, Pan, Phl, M6 X 1.00 X 20, 4.8, 2-37
Screw, Pan, Phl, M6 X 1.00 X 25, 4.8, 2-33
Screw, Pan, Phl, M6 X 1.00 X 40, 4.8, 2-21, 2-23
Screw, Set, 2-179, 4-11
Screw, Set En, 4-21
Screw, Set, .25-28 X 1.00, Ss, 2-153
Screw, Set, Soc, M10 X 1.50 X 20, 2-153
Screw, Set, Soc, M6 X 1.00 X 20, Pl[45h], 2-169
Screw, Set, Soc, M8 X 1.25 X 12, Pl[45h], 2-37
Screw, Soc, .38-16 X 1.00, Al, 2-67, 2-83, 2-87
Screw, Soc, .38-16 X 1.25, Al, 2-47, 2-49
Screw, Soc, .38-16 X 2.25, G5, 2-47, 2-49
Screw, Soc, #12-24 X 1.50, 2-83, 2-87

Screw, Soc, M4 X 0.70 X 16, 2-87
Screw, Soc, M6 X 1.00 X 20, 12.9, 2-61, 2-69
Screw, Soc, M6 X 1.00 X 70, 2-83, 2-87
Screw,M6X22.5mm, 5-7, 6-7
Seal, 2-7, 3-97, 3-99, 3-109, 5-9, 6-9, 7-11
Seal Kit, 4-32, 4-33
Seal Kit, 4-34, 4-44
Seal Kit, Bulb, Shakr Panl [800l], 2-37
Seal Kit, Cart, 4-39
Seal Kit, Cart CP, 4-43
Seal Kit, Cart., 4-38
Seal Kit, Cartridge, 4-79, 4-81, 4-82
Seal Kit, Coil, 4-38, 4-39
Seal Kit, Coil CP, 4-43
Seal Kit, Cyl, Hyd, 4-45
Seal Kit, Front, Shaft, 2-145
Seal Kit, Hyd Mtr Gear, 4-35
Seal Kit, Motor, 4-27, 4-29
Seal Kit, Pump En, 4-3, 4-5, 4-7, 4-9, 4-13, 4-15, 4-17, 4-19
Seal Kit, Rear, 4-29
Seal Kit, Scu, 4-37
Seal Kit, Shaft, 4-27, 4-29
Seal Kit, Vlv En, 4-41
Seal Kit,Cntrl, 4-11
Seal Kit,Cntrl En, 4-21
Seal Stop, Wndw, 4-47, 4-49, 4-51
Seal, Afmkt, Bulb, 90, 0.75d F/11ga 08ft, 4-47
Seal, Afmkt, Bulb, 90, 0.75d F/11ga 20ft, 4-49, 4-51
Seal, Afmkt, Bulb, 90, 1.33 02ft, 2-19
Seal, Afmkt, Bulb, 90, 1.33 03ft, 2-17
Seal, Afmkt, Bulb, 90, 1.33 08ft, 2-13
Seal, Afmkt, Bulb, Str, 0.58d 03ft, 2-13
Seal, Afmkt, Ure, Adh, 0.38, 0.75w 01ft, 3-55
Seal, Afmkt, Ure, Adh, 0.50, 1.00w 03ft, 3-55
Seal, Afmkt, Ure, Adh, 0.50, 1.00w 08ft, 3-55
Seal, Bearing, 2-189
Seal, Boot, Steering Column, 2-189
Seal, Brush Comp, Side, 2-4
Seal, Brush, Side, Complt [800l], 2-9, 2-11
Seal, Bulb, 90, 1.33 .06-.09grip 048.0l, 2-21, 2-23
Seal, Door, Rbr, 14" Lg, 4-47
Seal, Duct, 2-135, 2-137, 2-139
Seal, Dust, 2-29, 2-153
Seal, Filter, 3-109
Seal, Foam Rbr .19 .75W 8.43L, 3-97, 3-99
Seal, Foam Rbr, .19 .75W 47.1L, 3-97, 3-99
Seal, Foam, .06t .25w 34.0l, 3-61
Seal, Foam, .06t .25w 42.0l, 3-61
Seal, Foam, .06t .25w 54.0l, 3-61
Seal, Foam, .06t .25w 76.0l, 3-61
Seal, Foam, .06t .25w 84.0l, 3-61
Seal, Foam, 2.00 2.00w 37.0l, Adh, 3-55
Seal, Handle, Valve, 2-191
Seal, O-Ring .787Idx.210Th, 3-109
Seal, Org, 2-79
Seal, Org, .139 X 03.109 Id, 2-59
Seal, Org, Mixer, Lpg, 2-83
Seal, Org, Sensor, Temp [Epr], 2-84
Seal, Pan, Top, 2-4
Seal, Pulley, Shaft, 7-11
Seal, Rbr, Clsd, 0.50, 3.0w 04.0l 1/H, 2-13
Seal, Rbr, Clsd, 1.50, 2.00w 07.0l, 2-33
Seal, Rbr, Clsd, 1.50, 2.00w 26.4l, 2-33
Seal, Rbr, Clsd, 1.50, 2.00w 50.1l, 2-33
Seal, Rbr, Clsd, 1.62, Door, Brush, Lh, 2-9
Seal, Rbr, Clsd, 1.62, Door, Brush, Rh, 2-11
Seal, Rbr, Open, 0.31, 0.75w 14.8l Adh, 2-15
Seal, Rbr, Open, 0.50, 1.00w 60.0l, 2-13
Seal, Rbr, Open, 0.63, 0.63w 24.5l, 2-17, 2-21, 2-23
Seal, Rear, 5-5, 6-5
Seal, Rod, Adjuster, 2-183
Seal, Ure, 0.25, 0.50w 47.0l, 2-7
Seal, Ure, 0.38 0.75w 19.5l Adh, 2-135, 2-137, 2-139
Seal, Ure, 0.88, 1.00w 18.1l Adh, 2-29
Seal, Ure, 0.88, 1.00w 43.3l Adh, 2-29
Seal, Urethane, 3-109
Seal, Wndw [Center Wipe], 4-47, 4-49, 4-51
Seal,Valve Stem, 5-5, 6-5
Sealant, [Rtv], 03.35oz, 7-7
Sealant, [Rtv], 05.00oz, 7-7
Sealer, 7-3, 7-5
Seat Belt Kit, 3-107
Seat, Suspension [Seats Inc], 2-15
Send Unit, 2-111
Send-Unit, 2-113
Send-Unit, Fltr, Hyd, 2-165
Send-Unit, Fuel [800/810 2007], 2-117
Send-Unit, Fuel, Ohm, 2-115
Send-Unit, Press, Oil, 2-45
Send-Unit, Water, Temp, 06npt [Datcon], 2-41, 2-63, 2-75
Sender, Oil, Press [Mit], 2-50
Sensor [T Map], 2-67, 2-83, 2-87
Sensor [Tmap], 2-65, 2-79
Sensor Assy, Thermal, 2-187
Sensor, Distributor [Gm3.0L], 7-5
Sensor, Exhaust, Tailpipe, 2-109
Sensor, Manifold Press, 4-71, 4-73, 4-75, 4-77
Sensor, Oxygen, 2-107
Sensor, Oxygen [Gm 1.6l/3.0l 2007], 2-109
Sensor, Spd, Timing Wheel [3.0l], 2-65, 2-67, 2-79, 2-84, 2-87
Sensor, Temp, 2-65, 2-67, 2-79, 2-83, 2-89, 4-71, 4-73, 4-75, 4-77
Sensor, Temp [Epr, 2-84
Sensor, Temp, Coolant, 2-63, 2-65, 2-67, 2-79
Sensor, Temp, Water, 2-75
Sensor,Crnksft, 5-7, 6-7
Separator, 5-3, 5-24, 6-3, 6-24
Shaft, 3-97, 3-99, 4-33, 7-5
Shaft and Brg, 4-27, 4-29
Shaft Wldt, Main Brush, 2-179
Shaft, Drive Sp En, 4-3, 4-7, 4-13, 4-17
Shaft, Eccentric, 2-37
Shaft, Idler, 2-179
Shaft, Input, 4-11
Shaft, Input En, 4-21
Shaft, Motor, Hyd, 4-31
Shaft, Pivot, 2-173, 3-47, 3-109
Sheave Assy, 02grv, 6.2pd [Hc38], 2-41
Sheave, [3L], 1Grv, 03.5Pd 0.67B, 3-75, 3-93
Sheave, 01grv, 03.5pd 0.67b [3l], 3-79, 3-95
Sheave, Alternator, Se, 3-91
Sheave, Aux, [Hc38], 1Grv 6.8od [Gm 3.0L], 3-75
Sheave, Aux, 1grv, 06.8od [Gm3.0l, Hc38], 3-79
Sheave, Water Pump, 5-23, 6-23
Shft Asy,Output, 5-9, 6-9
Shield, 7-3
Shield Wldt, Heat, Manifold, 2-133
Shield, Dust, 2-45, 2-47, 2-49
Shield, Dust, Front Firewall, Full, 2-7
Shield, Heat, 2-63, 2-76, 2-107, 2-109
Shield, Heat [Gm3.0l 2010], 2-67, 2-87
Shield, Heat, Alternator [2007], 2-57
Shield, Heat, Alternator [Gm3.0l 10], 2-67, 2-87
Shield, Heat, Alternator, Hd[800/810 07], 3-79, 3-95
Shield, Heat, Manifold, 2-67, 2-83
Shim, 4-31
Shim .003Th 0.88Odx0.506Id, 2-185
Shim .005Th 0.88Odx0.506Id, 2-185
Shim .010 Thk En, 4-41
Shim .010Th 0.88Odx0.506Id, 2-185
Shim .015 Thk En, 4-41
Shim .020Th 0.88Odx0.506Id, 2-185
Shim .035 Thk En, 4-41
Shim .060Th 0.880Dxo.506Id, 2-185
Shims En, 4-5, 4-9, 4-15, 4-19
Shoe, Brake, 4-67, 4-69
Short Tube, 5-3, 6-3
Shroud Kit, Fan, Radiator [800/810], 2-139
Shroud Wldt, Fan, Radiator [800/810], 2-139
Shroud, Fan, Radiator, W/ Label [800l], 2-135, 2-137
Signal Turn, 3-31
Skirt, 3-101, 3-103
Skirt, Brush Door, 2-4
Skirt, Cooling Fan [800/810], 2-139
Skirt, Cover, Sbdc, 3-101, 3-103
Skirt, Deflection, 3-101, 3-103
Skirt, Front, Indoor, 2-4
Skirt, Neo, .06, 08.00w 53.38l, 04/ Sl, 2-7
Skirt, Neo, .12, 08.25w 48.37l, 06/ Sl, 2-29

Skirt, Neo, .12, Angle, 31.23l, 06/ Hole, 2-29
Skirt, Neo, .18, 05.62w 48.37l, 06/ Sl, 2-29
Skirt, Neo, .18, 07.75w 54.75l, 05/ Sl, 2-7
Skirt, Neo, .37, 07.50w 21.75l, 04/ Sl, 2-9, 2-11
Skirt, Rbr, .25, 07.45w 06.37l, 02/ Hole, 2-9, 2-11
Skirt, Rbr, .25, 07.84w 13.50l, 03/ Sl, 2-9, 2-11
Skirt, Retainer, 3-101
Skirt, Seal, Main Brush, 2-4
Sleeve, 2-91, 2-93, 2-95, 2-99, 3-41
Sleeve .438B 1.00D .35Stl, 3-41
Sleeve, .344B .50D .81 Cr.Anc, 2-151
Sleeve, .375B .62D1.06 Stl, 2-145
Sleeve, .375B .75D .32 Stl, 2-175, 3-41
Sleeve, .438B 1.00D .35 Stl, 2-175
Sleeve, 0.406B .750D .800Stl, 3-41
Sleeve, 0.406B 0.75D1.80 Stl, 2-175, 3-41
Sleeve, Alternator, 2-53, 2-55, 2-57, 3-79, 3-93, 3-95
Sleeve, Dashpo, Pump, Hyd, Gear, 4-31
Sleeve, Hyd 30", 2-179
Sleeve, Nyl, #27 55.0l, 3-49
Sleeve, Nyl, #33 65.0l, 3-65, 3-73, 3-83, 3-89
Sleeve, Nyl, 1.63id 08.0l, 2-155, 2-163
Sleeve, Nyl, 1.63id 16.0l, 2-155, 2-163, 2-165
Sleeve, Nyl, 1.63id 65.0l, 2-171
Sleeve, Nyl, 37, 25.0l, 2-145
Sleeve, Nylon #27 55.Ol, 3-45
Sleeve, P/M, 0.496d 0.318b 0.50l 430ss, 2-175
Sleeve, P/M, 0.496d 0.318b 0.65l 430ss, 2-175
Sleeve, Throttle, Plstc [Bosch], 2-79
Sleeve,0.406B .750D .800 Stl, 2-175
Solenoid, 5-9, 6-9
Solenoid, Valve, Hyd, 4-81, 4-82
Solenoid, Valve, Hyd, 36vdc, 4-79, 4-81, 4-82
Spacer, 2-63, 2-75, 2-135, 2-137, 2-139, 2-151, 2-169, 2-175, 2-185, 3-41, 3-45, 3-47, 5-15, 6-15
Spacer En, 4-41
Spacer Plate, 4-33
Spacer-.50 Od X .055W X 1.0, 2-151
Spacer, Brake, 2-151
Spacer, Condenser, 4-55, 4-57
Spacer, Nyl, 4-47
Spacer, Sppt, Fltr Lock Off, 2-79
Spark Plug, 5-24, 6-24
Spark Plug Wires (Straight Boots), 7-5
Spark Plug-10 FD, 2-4
Sparkplug, 2-4
Sparkplug [Gm 3.0], 2-4, 7-3
Spindle, Adjustment, 2-17
Spring, 4-27, 4-29, 4-31, 4-67, 4-69, 7-3, 7-9
Spring En, 4-41
Spring Assy Kit, 2-7
Spring Assy, Centering, Lbs . Travel, 2-153
Spring En, 4-5, 4-9, 4-15, 4-19, 4-41
Spring Kit, 4-37
Spring, Cntr, 4-11
Spring, Cntr En, 4-21
Spring, Comp, 3-47
Spring, Dsl, 0.75od 0.38id 1.50l, 2-37
Spring, Dsl, 1.00od 0.50id 1.70l, 2-173
Spring, Extension, 3-47
Spring, Extn, 0.96od 0.09wir 04.4l, 2-33
Spring, Extn, 1.00od 0.09wir 02.8l, 2-153
Spring, Extn, 1.00od 0.15wir 05.8l, 2-173
Spring, Gas 80 Lb, 3-57, 3-59
Spring, Motor, Hyd, 4-31
Spring, Tens,0.5Dx.06Wire 2.5L, 2-151
Spring, Tension, 2-181, 5-19, 6-19
Spring, Tors, 0.81id .09wir 0.3coil, Rh, 2-171
Spring, Torsion, 3-45
Spring,Retainer, 4-11
Spring,Retainer En, 4-21
Sprng,Comp,0.62Idx.06Wire 2.3L, 2-189
Sprng,Comp,0.83Idx.07Wire 1.0L, 3-97, 3-99
Sprng,Comp,0.87Idx.10Wire 2.5L, 2-183
Starter, 12vdc [Gm], 2-45, 2-47, 2-49
Statnry Gear, 5-9, 6-9
Std.Exh.Valve, 5-21, 6-21
Std.Int.Valve, 5-21, 6-21
Steer Control Hyd#4 04.5 1300, 4-37
Steer Control, Hyd (See Breakdowns), 2-189
Stem, Valve, Hyd, 4-79, 4-81
Strain,Relief, 3-109
Strainer-Hyd Suction 25-100-03, 2-4, 2-163
Strainrelief, 2-39
Strap Weldmt, Gas Tank, 2-111
Strap Wldt, Tank, .06th X 1.0w, 37.7l, 2-113, 2-115
Strap Wldt, Tank, 0.06 1.0w 37.7l, 2-117
Strap, Hinge - Lp Tank Mtg, 2-119, 2-121, 2-123, 2-125
Strap, Mtg, Actuator, Govnr, 2-61, 2-69
Strap, Mtg, Fltr, Air, 7.17id, 2-97, 2-101
Strap, Mtg.- Lp Tank, 2-119, 2-121, 2-123, 2-125
Strap, Retainer, Seal, 2-4
Strap, Tank Retainer - Lp, 2-119, 2-121, 2-123, 2-125
Strip, Retainer, Bearing, 2-179
Strip, Retainer, Brake Cable, 2-151
Strip, Retainer, Skirt, 2-4, 3-101, 3-103
Strip, Stl, 0.12 01.00w 08.30l, 2-13
Stud, 5-15, 5-23, 6-15, 6-23, 7-11
Stud M12, 5-3, 6-3
Stud, .003" O.S., 7-3
Stud, .013" O.S., 7-3
Stud, .38-16 X 1.2l, 2-65, 2-67, 2-83, 2-87
Stud, Adjustment, 3-97, 3-99
Stud, Intake Manifold To Cyl Head, 2-63, 2-65, 2-75, 2-80
Stud, Intake To Exhaust Manifold, 2-63, 2-65, 2-75, 2-79
Stud, Pipe, Exhaust, 2-63, 2-65, 2-75, 2-80
Stud, Wheel .56-18x2.13, 2-145, 2-147
Stud,M6X61.8mm, 5-7, 6-7
Stud,M8X51.0mm, 5-7, 6-7
Support Wldt, Seat, 2-15
Support Wldt, Seat [800 Gray], 2-15
Switch, 3-31
Switch Assy, Pressure, Hyd, 2-167
Switch Assy, Roller-no, 3-27, 3-29
Switch Ignition, 2-191
Switch Rocker Spst, 2-175, 3-41
Switch, 3 Pos, Blower, Heat, 3-63, 3-69, 3-71, 3-81, 3-85, 3-87
Switch, A/C [Binary], 4-55, 4-57
Switch, Motor, Wiper, 12v, 4-47
Switch, Press, 0006psi Dpdt, 2-41
Switch, Press, 0020psi Spdt, 2-39
Switch, Press, 0070psi Spst Nc 12vdc 08a, 2-71, 2-73
Switch, Press, 12vdc 08a Spst Nc 0070psi, 2-121, 2-123, 2-125
Switch, Press, 7psi, Spdt, 2-47, 2-49
Switch, Pressure, 3-109
Switch, Pushmom, Spst100A 12V, 2-189
Switch, Rocker, Dpdt, 2-181, 2-191
Switch, Snap, 15a No, Rlr, 2-25
Switch, Thermo, A/C, 3-63, 3-69, 3-71
Switch,Lockout En, 4-21
Swivel, 3-65, 3-73, 3-83, 3-89

T

Taillight, 12vdc, 6.0 X 2.5, Rwk 57940, 2-7
Tank Wldt, Hydraulic w/label, 2-163
Tank-Lp, 33#,Liq,Both,Fill Ga, 2-119, 2-121, 2-123, 2-125
Tank, Coolant, 03.5 03.0 06.5deep 1.0 Qt, 2-135
Tank, Coolant, 04.7 03.3 4.7deep, 1liter, 2-137, 2-139
Tank, Coolant, 06.0 04.5 06.9deep 2.5 Qt, 2-135
Tank, Fuel, 2-111
Tank, Fuel, 14 Gas 14.7 13.0 19.0l, 2-113
Tank, Fuel, 14 Gas 14.7 13.0 19.0, 2-115
Tank, Fuel, 14.0gal, 14.66w 13.0hi 19.0l, 2-117
Tap.Assy-Valve, 5-21, 6-21
Temperature sensor, 5-23, 6-23
Tensioner, Arm, 5-19, 6-19
Term.Cover, 5-9, 6-9
Terminal, Qm, .25 16-14ga, Blu, F-Ins, 4-47
Therm 190 W/Gsk, 5-23, 6-23
Thermostat, 7-3
Tie, Cable, 3-3, 3-5, 3-7, 3-9, 3-11, 3-13, 3-15, 3-17, 3-27, 3-29, 3-31

Tie, Cable 1.75D Max 7.50Lg, 3-19, 3-21, 3-23, 3-25, 3-109
Tie, Cable 3.00D Max 11.41Lg, 2-189
Tie, Cable 4.00 Max 14.50Lg, 3-109
Tie, Cable, 11.3l, 2.75d Max, 2-139
Tie, Cable, 20.0l, 6.00d Max, 2-185
Tie, Cable, Nyl, 07.3l .19w 1.8 Max D, 2-39, 3-63, 3-69, 3-71, 3-111
Tie, Cable, Nyl, 11.4l .19w 3.0 Max D, 2-7
Tie, Cable, Nyl, 11.5l .19w, 2-75
Tie, Cable, Nyl, 15.3l . W 4.5 Max D, 3-65, 3-73, 3-83, 3-89
Timing Belt, 5-19, 6-19
Tire & Flap Assy, 2-149
Tire & Rim Assy, Pneu 6.50-10, 2-149
Tire and Rim Assy, Solid 6.5, 3-106
Tire, Solid, 3-106
Tray Wldt, Drip, Gas [3.0l], 2-65
Tread, Non-Skid, 01.4w 12.0l, 2-7
Tread, Non-Skid, 02.2w 11.5l, 2-153
Tread, Rubber, 3-55
Tube Assy, Brake, 2-151
Tube Assy, Fuel .31Od, 2-111
Tube Asy,Cond/Dry, 4-55, 4-57
Tube Wldt, Brace, Cntr, 2-17
Tube Wldt, Intake, 2.0d .38npt, 2-93
Tube Wldt, Tee, 2-95, 2-97, 2-99, 2-101
Tube, 0.26id 0.38od 00.6l, Stl, Pl, 2-169
Tube, 0.34id 0.44od 00.5l, Stl, 2-33
Tube, 0.34id 1.00od 00.5l, Stl, Pl, 2-173
Tube, 0.38id 0.5ood 00.6l, Ss, 2-37
Tube, 0.38id 0.62od 00.6l, Stl, 2-15
Tube, 0.41id 0.62od 00.5l, Stl [H/T], 2-153
Tube, 0.44id 0.62od 00.4l, Stl, 2-171, 2-173, 3-45, 3-47
Tube, 0.44id 0.62od 02.4l, Stl, 2-33
Tube, 0.44id 0.75od 00.3l, Stl, Pl, 2-171
Tube, 0.50id 1.00od 01.0l, Stl, Pntd, 2-53, 2-55, 2-57, 3-79, 3-95
Tube, 0.53id 1.00od 01.4l, Stl [Q], 2-31
Tube, 0.62D .44B 2.44, Stl, 3-57, 3-59
Tube, 00.75d 00.41b 03.3l Stl Pl, 3-75
Tube, 01.00d 00.44b 00.7l Stl Plt, 3-93
Tube, 01.00d 00.50b 01.0l Stl Pnt, 3-75
Tube, 1.28id 1.50od 00.4l, Stl, 2-27
Tube, Bleed, Air, .62od 2.2l .12npt, Alm, 2-61, 2-71, 2-73
Tube, Coolant, 1.5d Upper, Gas/Lpg, 2-129, 2-131
Tube, Coolant, 1.5d W/.25npt Low, G/Lpg, 2-129, 2-131, 2-133
Tube, Coolant, 1.5od Lower, 2-127
Tube, Cross, Bumper, Se, 3-38
Tube, Ds, 7-7
Tube, Exhaust, 2.0d [Gm3.0] [800/810], 2-105, 2-107
Tube, Exhaust, Lower, [800/810, 2007], 2-109
Tube, Exhaust, Rear, 2-107
Tube, Exhaust, Rear [Gm3.0l 800/810 07], 2-109
Tube, Inner, 2-149
Tube, Intake, 2.0d 04.0l, 2-93
Tube, Mach, Retainer, Spring , 1.0d 1.7l, 2-181
Tube, Radiator, Upper [800gas/Lpg], 2-133
Tube, Radiator, Upper, Gas/Lpg, 2-127
Tube, Spacer, Brush Lift, 2-181
Tube, Tailpipe, 2-109

V

Vac.Fitting, 5-15, 6-15
Valve, 4-27, 4-29, 4-31, 7-7, 7-9
Valve - Hyd., Solenoid, 4-38
Valve [Pc], 2-67, 2-83, 2-87
Valve [Pcv], 2-45, 2-65, 2-79
Valve Assy, Ball, 3 Way, Em10/Em10/Em10, 3-65, 3-73, 3-83, 3-89
Valve Guide Bushing, 5-21, 6-21
Valve Plate, 4-5, 4-9, 4-15, 4-19, 4-27, 4-29
Valve Rocker Arm, 5-21, 6-21
Valve Rocker Arm Cover, 5-21, 6-21
Valve Spool, 4-11
Valve Spring, 5-21, 6-21
Valve Spring Key, 5-21, 6-21
Valve Spring Retainer, 5-21, 6-21
Valve Stem N.O. CP, 4-43
Valve Stem 4W2P, 4-39
Valve Stem 4W2P CP, 4-43
Valve Stem Seal, 5-21, 6-21
Valve Stem, N.D., 4-38
Valve-Hyd, Solenoid (See Breakdowns), 2-167, 2-187, 3-45
Valve, Ball, 3-way, 08pf/08pf/08pf Brs, 3-65, 3-73, 3-83, 3-89
Valve, Cartridge, Check, 4-81, 4-82
Valve, Cartridge, Flow Reg, 4-81
Valve, Cartridge, Relief, 4-81
Valve, Check, 2-79
Valve, Cntrl, Hyd, Solenoid, 12vdc 06gpm, 4-82
Valve, Cntrl, Hyd, Solenoid, 12vdc 06gpm (See Breakdowns), 2-175, 3-41
Valve, Cntrl, Hyd, Solenoid, 12vdc 08gpm, 4-81
Valve, Cntrl, Hyd, Solenoid, 12vdc 08gpm (See Breakdowns), 2-167
Valve, Cntrl, Hyd, Solenoid, 12vdc 12gpm, 4-79
Valve, Cntrl, Hyd, Solenoid, 12vdc 12gpm (See Breakdowns), 2-187, 3-45
Valve, Drive, Motor, Hyd, 4-31
Valve, Exhaust, 7-3
Valve, Expansion, 4-59, 4-61
Valve, Fuelock, Lpg, Wire Connector, 2-79
Valve, Hyd Control Man, 4-41
Valve, Hyd Control Man (See Breakdowns), 2-169
Valve, Hyd Control Solenoid, 4-39, 4-43
Valve, Hyd Solenoid (See Breakdowns), 2-175
Valve, Hyd, Solenoid (See Breakdowns), 3-41
Valve, Intake, 7-3
Valve, Lock Off, 2-83, 2-89
Valve, Lpg [Mixer], 2-83
Valve, PCV, 2-4
Valve, Press Relief, Lpg Rego, 2-119, 2-121, 2-123, 2-125
Valve, Trim, Fuel, Lpg, 2-79
Valve, Trim, Press, Lpg, 2-79
Valve, Water, Heater, H, 10bm, 3-65, 3-83
Vaporizer / Reg, Lpg [Impco], 2-71
Vaporizer Kit, Repair, F/383170, 2-73
Vaporizer Kit, Replmt, 2-71
Vaporizer, Lpg, 2-75
Video, Oprtr, Training, Dvd [800], 3-114
Vlv Spool Wide En, 4-21

W

Wand, 3-97
Wand Kit, Vac, 3-97
Wand Wldt [800 Gray], 3-99
Wand, Vacuum [800 Gray], 3-99
Warning Label, Starter, 5-21, 6-21
Wash M15 1.53Od, 5-13, 6-13
Washer, 2-31, 2-145, 2-191, 4-3, 4-7, 4-13, 4-17, 4-23, 4-25, 5-9, 5-11, 5-19, 6-9, 6-11, 6-19, 7-5, 7-9, 7-12
Washer , 7-9
Washer Flat,0.50,Sae, 2-17, 2-19, 2-31, 2-153, 2-171, 2-189
Washer En, 4-3, 4-5, 4-7, 4-9, 4-13, 4-15, 4-17, 4-19, 4-41
Washer-Belleville .31 Pltd, 3-41
Washer-Flt .25 Fender, 3-55
Washer-Loc Int-Ext .31 Pltd, 3-51, 3-53
Washer-Loc Int-Ext .25 Pltd, 3-31
Washer-Loc Int-Ext 10 Pltd, 3-31
Washer, .310B .88D .12Rbr, 3-45
Washer, .344B .69D .06Nylon, 3-109
Washer, .531B 1.75D .12Cr.Znc, 2-179
Washer, 0.25b 1.12d .12, Ss, 2-121
Washer, Belleville, .25, 3-45
Washer, Belleville, .31, 2-135, 2-137, 2-139, 2-141, 3-75, 3-93
Washer, Belleville, .50, 2-179
Washer, Fender, 2-91, 2-93, 2-95, 2-99
Washer, Flat, 3-45
Washer, Flat, .28b 0.75d 1.80, Ne, 4-47
Washer, Flat, .31 Std, 2-129, 2-131
Washer, Flat, .38 Sae, 3-93
Washer, Flat, #10, 2-97, 2-101, 2-123, 2-125, 2-137, 2-139, 2-167, 2-175, 3-41
Washer, Flat, 0.12b 0.38d .03, Stl, Pl, 2-191
Washer, Flat, 0.19b 0.44d .05, Pl, 08, 2-67, 2-87, 2-187
Washer, Flat, 0.25 Sae, 2-179
Washer, Flat, 0.25 Std, 2-95, 2-99, 2-135, 3-69, 3-71, 3-73, 3-85, 3-87, 3-89

Washer, Flat, 0.25, Fendr, 2-9, 2-11
Washer, Flat, 0.25, Sae, 2-9, 2-11, 2-45, 2-47, 2-49, 2-67, 2-73, 2-87, 2-89, 2-117, 2-133, 2-151, 2-185, 2-187, 3-27, 3-29, 4-47, 4-49, 4-51
Washer, Flat, 0.25, Std, 2-17, 2-23, 2-67, 2-83, 2-87, 2-117, 2-139, 2-153, 2-187, 3-3, 3-5, 3-11, 3-13, 3-45, 3-55
Washer, Flat, 0.25b 0.56d .05, Pl, 10, 2-13, 2-15, 2-19, 2-29, 2-33, 2-59, 2-153, 2-187, 2-189, 2-191, 2-192, 3-3, 3-5, 3-7, 3-9, 3-11, 3-13, 3-15, 3-17, 3-19, 3-21, 3-23, 3-25, 4-49, 4-51
Washer, Flat, 0.28b 0.62d .06, Nyl, 2-61
Washer, Flat, 0.28b 1.00d .06, Stl, 2-75
Washer, Flat, 0.28b 1.00d .06, Stl, Blk, 4-47
Washer, Flat, 0.28b 1.38d .12, Hrs Pl, 2-169
Washer, Flat, 0.31 Fender, 3-51, 3-53
Washer, Flat, 0.31 Ss, 3-57, 3-59
Washer, Flat, 0.31 Std, 2-107, 2-135, 2-137, 2-139, 2-141, 2-151, 2-176, 2-185, 3-41, 3-75, 3-76
Washer, Flat, 0.31, Hardened, 2-57
Washer, Flat, 0.31, Sae, 2-13, 2-29, 2-151, 3-3, 3-5, 3-11, 3-13
Washer, Flat, 0.31, Std, 2-15, 2-17, 2-19, 2-23, 2-31, 2-33, 2-53, 2-97, 2-101, 2-109, 2-117, 2-123, 2-125, 2-143, 2-145, 2-153, 2-165, 2-173, 2-187, 3-47, 3-57, 3-59, 3-79, 3-95
Washer, Flat, 0.31b 0.88d .12, Rbr, 2-187, 4-47
Washer, Flat, 0.32b 1.00d .12, Ss, 2-153
Washer, Flat, 0.34b 0.69d .06, Nyl, 2-39
Washer, Flat, 0.38 Sae, 3-45, 3-47, 3-76
Washer, Flat, 0.38 Std, 2-107, 2-135, 2-137, 2-139, 3-45, 3-47, 3-73, 3-75, 3-89
Washer, Flat, 0.38, Hardened, 2-67, 2-83, 2-87
Washer, Flat, 0.38, Sae, 2-17, 2-19, 2-50, 2-53, 2-55, 2-57, 2-89, 2-153, 2-171, 2-173, 2-189, 3-79, 3-95
Washer, Flat, 0.38, Std, 2-9, 2-11, 2-17, 2-25, 2-27, 2-37, 2-45, 2-47, 2-49, 2-53, 2-109, 2-143, 2-151, 2-153, 2-171, 2-173, 2-175, 2-185, 3-7, 3-9, 3-15, 3-17, 3-57, 3-59, 3-79, 4-49, 4-51
Washer, Flat, 0.38b 0.88d .08, Ss, 2-29, 2-59, 3-57, 3-59
Washer, Flat, 0.39b 0.75d .06, Nyl, 2-123, 2-125
Washer, Flat, 0.40b 1.12d .12, Stl, Pl, 2-187
Washer, Flat, 0.44, Std, 2-9, 2-11, 2-145
Washer, Flat, 0.44b 2.00d .12, Stl, Pl, 2-135, 2-137, 2-139
Washer, Flat, 0.44b 1.00d .08, Ss, 2-37
Washer, Flat, 0.50 Sae, 2-179
Washer, Flat, 0.50, Sae, 2-143, 2-145
Washer, Flat, 0.50, Std, 2-13, 2-21, 2-23, 2-45, 2-47, 2-49
Washer, Flat, 0.52b 0.90d .07, Stl, Pl, 2-153
Washer, Flat, 0.53b 1.88d .12, Stl, Pl, 2-13, 2-43, 2-45, 2-47
Washer, Flat, 0.53b 2.13d .11, Stl, Pl, 2-43, 2-45, 2-47, 2-49
Washer, Flat, 0.62, Sae, 2-183
Washer, Flat, 0.71b 2.25d .19, Stl, Csk, 2-173, 3-47
Washer, Flat, 0.75, Sae, 2-145
Washer, Flat, 0.75, Std, 3-95
Washer, Flat, 08, 3-27, 3-29
Washer, Flat, 1.02b 1.75d .12, Stl, 2-147
Washer, Flat, 1.30b 3.00d .06, Stl, 2-173, 3-47
Washer, Flat, Belleville, .25, 2-9, 2-11, 2-17, 2-19, 2-23, 2-171
Washer, Flat, Belleville, .31, 2-13, 2-33, 2-55, 2-57, 2-143, 2-189, 3-79, 3-95
Washer, Flat, Belleville, .38, 2-165
Washer, Flat, Belleville, .50, 2-173, 3-47
Washer, Flat, M10, Ss, 2-175, 3-41
Washer, Lock, .38, 3-75, 3-93
Washer, Lock, #10, 2-45, 2-47, 2-49
Washer, Lock, 0.25, 2-45, 2-47, 2-49
Washer, Lock, 0.31, 2-45, 2-47, 2-49, 2-53
Washer, Lock, 0.38, 2-45, 2-47, 2-49, 2-53, 2-67, 2-83, 2-87
Washer, Lock, Int / Ext, 0.38, 2-67, 2-83, 2-87
Washer, Lock, Int-ext, .38, 3-93
Washer, Lock, Int-Ext, 0.31, 2-17
Washer, Lock, Int-Ext, 0.38, 2-50, 2-55, 2-57
Washer, Lock, Int, #08, 2-115, 2-117, 3-75, 3-79, 3-93, 3-95
Washer, Lock, Int, #10, 2-115, 2-117
Washer, Lock, Int, 0.25, 2-73, 2-107, 2-109, 3-19, 3-21, 3-23, 3-25
Washer, Lock, Int, 0.31, 2-135, 2-137, 2-165, 2-187
Washer, Lock, Int, 0.31 Ss, 3-57, 3-59
Washer, Lock, Int, 0.31, Ss, 3-57, 3-59
Washer, Lock, Int, 08 Ss, 3-109
Washer, Lock, Int, 10, 2-57
Washer, Lock, Int, 10, Ss, 2-179
Washer, Lock, M5, 2-45, 2-47, 2-49
Washer, Manifold, Exhaust, 2-63, 2-65, 2-75, 2-79
Washer, Rbr, .12 0.31b 0.88d, 2-135, 2-175, 3-41
Washer, Thrust, 0.50b 0.87d 0.06w, 2-7
Washer, Thrust, 0.53b 1.00d 0.03w[Fbrgl], 2-37
Washer,Lock Special, 2-145
Water Outlet, 5-23, 6-23
Water Pump, 5-23, 6-23, 7-12
Weight, Counter, Gas/Lpg, 2-7
Wheel, Steering, 2-189
Wheel, Steering, 14.0d 0.81b 36tooth, 2-189
Wire, 7-5
Wire Asy,Spark Plug, 5-24, 6-24
Wire Harness, 5-24
Wire Kit, Ground, Repair [2.3l Ford Lpg], 2-71
Wire Set, Sparkplug (90 Degree Boots), 7-5
Wire, 10ga 16.0l Blk .38ring /.25ring, 3-75, 3-93
Wire, 10ga 09.0l Blk .19ring /.41ring, 2-41
Wire, 10ga 16.0l Blk .25ring /.38ring, 3-79, 3-95
Wire, 16ga 06.0l Blk .25qf /.31ring, 2-17
Wire, 42.0 Lg, 2Ga, Neg, 2-141
Wire, Coil, 7-5
Wire, Dome Light, 4-47
Wire, Ground, 2-53, 2-55, 2-57, 3-91