# PARTS LIST




2019.03.14

# TABLE OF CONTENTS

Cabinet 761-21 XC, 19 GALLON AS/E XC . . . . . 1
Base, motor 761-21 XC, 19 GALLON AS/PE . . . . . 3
Filter, cleaning system 761-21 XC, 19 GALLON AS/PE . . . . . 5
Container 761-21, 19 GALLON AS/PE . . . . . 7
Frame 761-21, 19 GALLON AS/PE . . . . . 9
Accessories 560, 761, 763 . . . . . 11
RECOMMENDED SPARE PARTS . . . . . 13

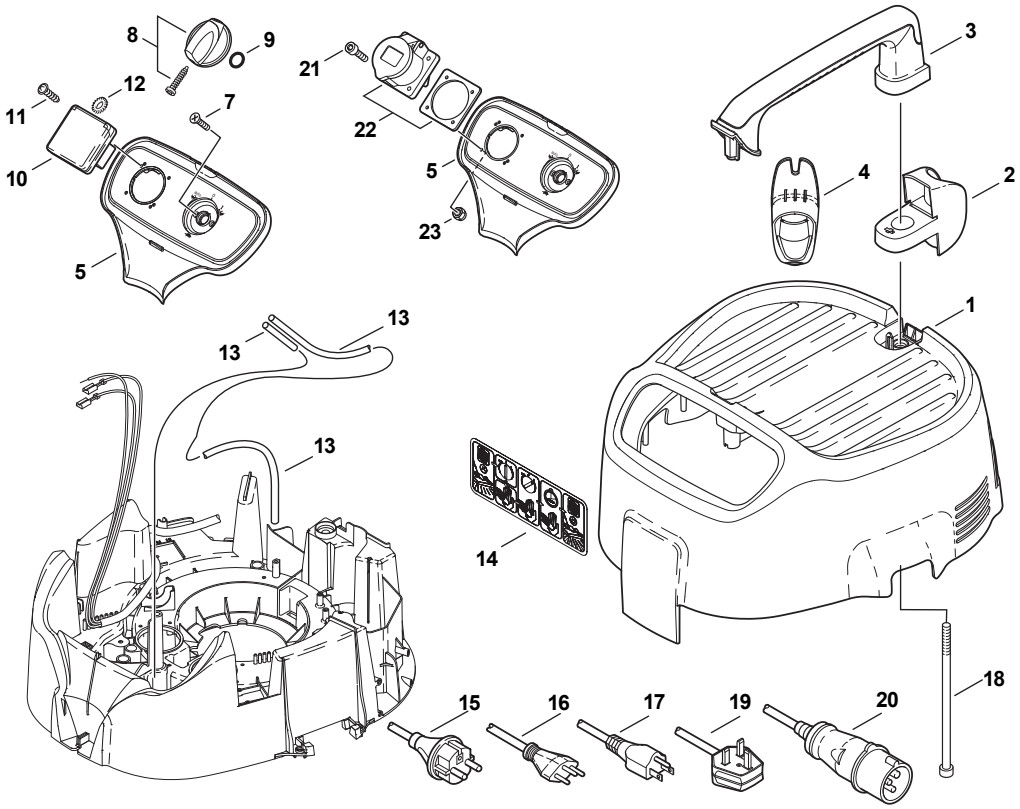


Up to serial number:
3510170800138

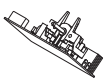

For ATTIX 19 AS/E XC US
Up to serial number:
3510174602262

25

From serial number:
3510170800138

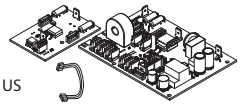

For ATTIX 19 AS/E XC US
From serial number:
3510174602262

26

-21
From serial number:
3510170800138

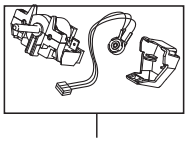

For ATTIX 19 AS/E XC US
From serial number:
3510174602262

27

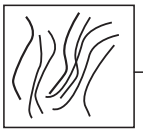

28

| No. | Part No. | Qty. | Description | Part Note |
|---|---|---|---|---|
| 1 | 107402652 | 1 | 6OOD W.SOUNDPROOFING | |
| 2 | 302000382 | 1 | SUCTION TUBE FASTENER | [1] |
| 3 | 107402650 | 1 | HANDLE KIT | |
| 4 | 302000380 | 1 | CLIP | |
| 5 | 302000757 | 1 | SWITCH BOX ATTIX 5-7 21 | |
| 7 | 18274 | 2 | COUNTERS UNK SCREW M4X12 | |
| 8 | 909100204 | 1 | ROTARY KNOB 06X5 | |
| 9 | 9868 | 1 | O-RING 10.2X2.5 NBR 70 | |
| 10 | 107400059 | 1 | SOCKET 16A/250V CH | [2] |
| 10 | 302004338 | 1 | SOCKET 15A/125V US/CSA | [3] |
| 10 | 302000683 | 1 | SOCKET 10A/250V DK | [4] |
| 10 | 302004034 | 1 | SOCKET 16A/250V EU | [5] |
| 10 | 302004336 | 1 | SOCKET 13A/250V GB | [6] |
| 11 | 11256 | 2 | SCREW 3.5 X 18 | |
| 12 | 4021 | 2 | SERRATED LOCK WASHER A4 | [3] |
| 13 | 107411687 | 1 | SILIKON HOSE D3X1,5 | |
| 14 | 302000824 | 1 | LABEL "TOTAL CLEAN" 160X | |
| 15 | 107402642 | 1 | POWER CORD H05RR-F | [4] |
| 15 | 107402641 | 1 | POWER CORD H05RR-F | [5] |
| 16 | 107400267 | 1 | CORD H05RR-F 3G1.0CH | [2] |
| 17 | 302004332 | 1 | POWER CORD SJTW-A AWG14/3X8.4 US | [3] |
| 17 | 302000882 | 1 | POWER CORD SJTW-AWG16/3X8 | [7] |
| 18 | 909100084 | 2 | SCREW M6X140 | |
| 19 | 107400270 | 1 | CORD H05RR-F 3G1.5 BS1 | [6] |
| 20 | 107400271 | 1 | CORD H07BQ-F 3G2.5 GB | [8] |
| 21 | 50598 | 4 | SCREW M5X20 | [8] |
| 22 | 107402842 | 1 | OUTLET 2P AND PE 16A 110V | [8] |
| 23 | 7417 | 4 | HEXAGON THIN NUT | [8] |
| 25 | 302000852 | 1 | ELECTRONIC 120V SET1 | [9] |
| 25 | 302000853 | 1 | PC BOARD/SWITCH | [10] |
| 26 | 107416930 | 1 | PCBA AUTO CLEAN 1M-2S KIT1 220-240V | [11] |
| 26 | 107418248 | 1 | PCBA AUTO CLEAN 1M-2S KIT1 110-120V | [12] |
| 27 | 107413449 | 1 | ROTARY SWITCH 3 POS+REG | [12] |
| 28 | 107416927 | 1 | WIRE/CAPACITOR KIT2 | |

Part Notes:

[1] - 560-21XC, 12GALL.RDFD
STOCK COVERS GUARANTEE

[2] - *CH*

[3] - *US*

[4] - *DK*

[5] - *EU*

[6] - *GB,230V*

[7] - For ATTIX 19 AS/E XC US
From serial number:
3510174602262
PB-COM-LI-2017-004 ATTIX 19 Gallon XC US_New Electronics

[8] - *GB,110V*

[9] - 100-120V
PB-COM-LI-2017-004 ATTIX 19 Gallon XC US_New Electronics

[10] - 220-240V

[11] - PB-COM-LI-2017-001 ATTIX 761,791_New Electronics

[12] - PB-COM-LI-2017-001 ATTIX 761,791_New Electronics
PB-COM-LI-2017-004 ATTIX 19 Gallon XC US_New Electronics

**ATTIX 560-21 XC, 560-31 XC, 12Gallon RDFD, 12Gallon AS/PE, RDFD Head Kit, 761-21 XC, 19Gallon AS/PE2, 763-21 ED**

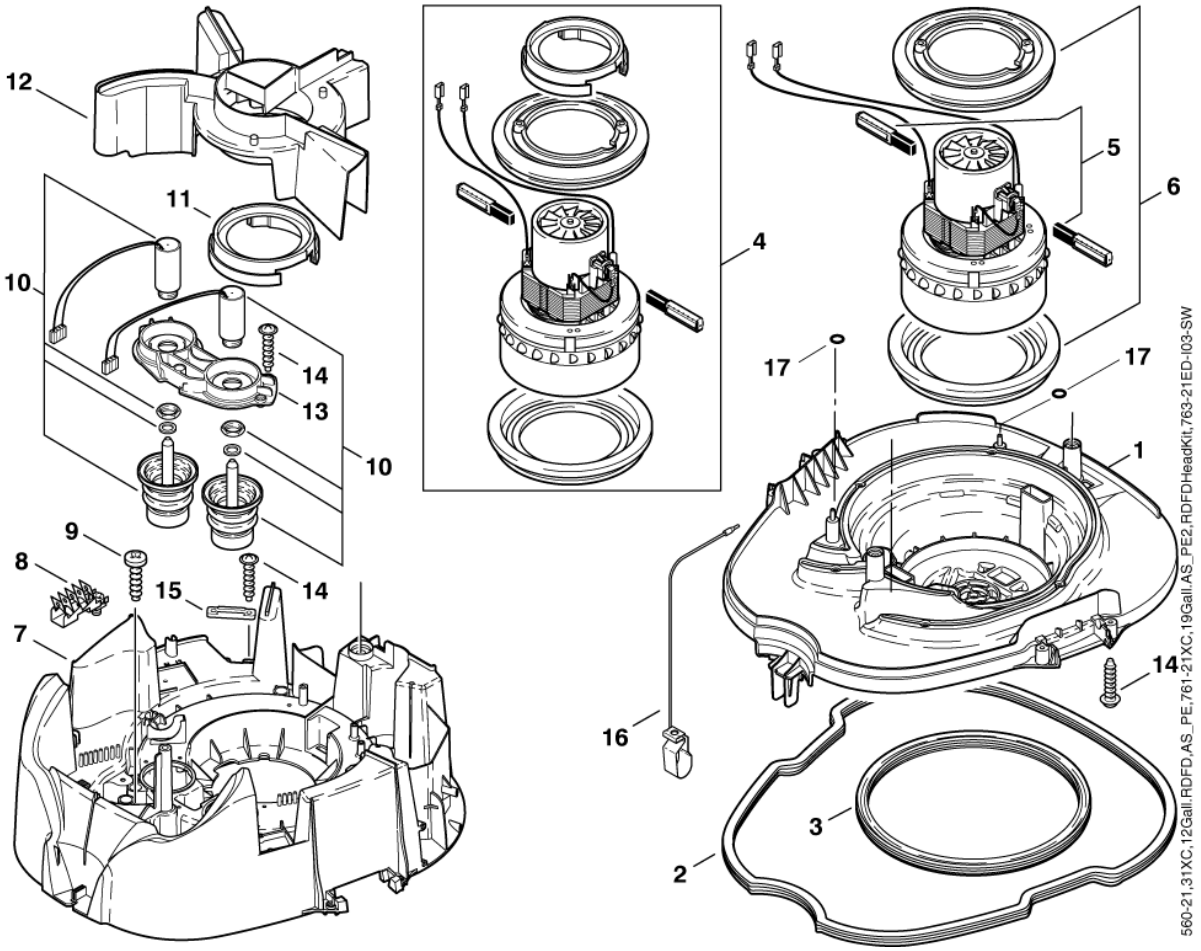

| No. | Part No. | Qty. | Description | Part Note |
|---|---|---|---|---|
| 01 | 302000511 | 1 | BASE | |
| 02 | 302000637 | 1 | GASKET | |
| 03 | 302000697 | 1 | GASKET FILTER | |
| 04 | 49594 | 1 | MOTOR SQ 1200 X 24 | [1] |
| 04 | 62012 | 1 | EL. MOTOR TURBO 230VOLT | [2] |
| 04 | 26784 | 1 | MOTOR 120V 1200W | [3] |
| 05 | 26774 | 1 | CARBON BRUSH SET M | [4] |
| 05 | 49625 | 1 | CARBON BRUSH C | [5] |
| 05 | 26775 | 1 | CARBON BRUSH SET FOR | [6] |
| 06 | 29205 | 1 | SEAL | [7] |
| 06 | 107402627 | 1 | MOTOR BEARING RING SET EC | [8] |
| 06 | 28875 | 1 | MOTOR BEARING RING SET | [7] |
| 06 | 42538 | 1 | MOTOR BEARING RING SET E | [8] |
| 07 | 107402639 | 1 | PLATE CHUCK ATTIX 560 PP | |
| 08 | 302000755 | 1 | EARTH CONNECTOR | |
| 09 | 909100138 | 6 | SCREW 5X20 | |
| 10 | 107402635 | 2 | ELECTROMAGNET 24V KIT | [9] |
| 10 | 302000217 | 2 | ELECTROMAGNET 12V | [10] |
| 11 | 47036 | 1 | COLLAR | |
| 12 | 302000373 | 1 | AIR DUCT | |
| 13 | 302000388 | 1 | FRAME 190X90X18 PP | |
| 14 | 11256 | 11 | SCREW 3.5 X 18 | |
| 15 | 5697 | 1 | STRAP 3X8X33 | |
| 16 | 302000823 | 1 | CONTACT SPRING 41.8x14 AS | [11] |
| 16 | 61174 | 1 | EARTHING CABLE | |
| 17 | 62359 | 2 | GASKET 9X4X1 | |

Part Notes:

[1] - 220-240V/1200W
[2] - 763-21 ED
[3] - 110-120V/1200W
[4] - FOR IDENTIF.LETTER "M"
[5] - FOR IDENTIF.LETTER "C"
[6] - FOR IDENTIF.LETTER "L"
[7] - FOR IDENTIF.LETTER "L"+"M"
[8] - FOR IDENTIF. LETTER "C"
[9] - FOR 220-240V
[10] - FOR 100-120V
[11] - *GB,230V*

**ATTIX 560-21 XC, 560-31 XC, 12Gallon RDFD, 12Gallon AS/PE, RDFD Head Kit, 761-21 XC, 19Gallon AS/PE2, 763-21 ED**

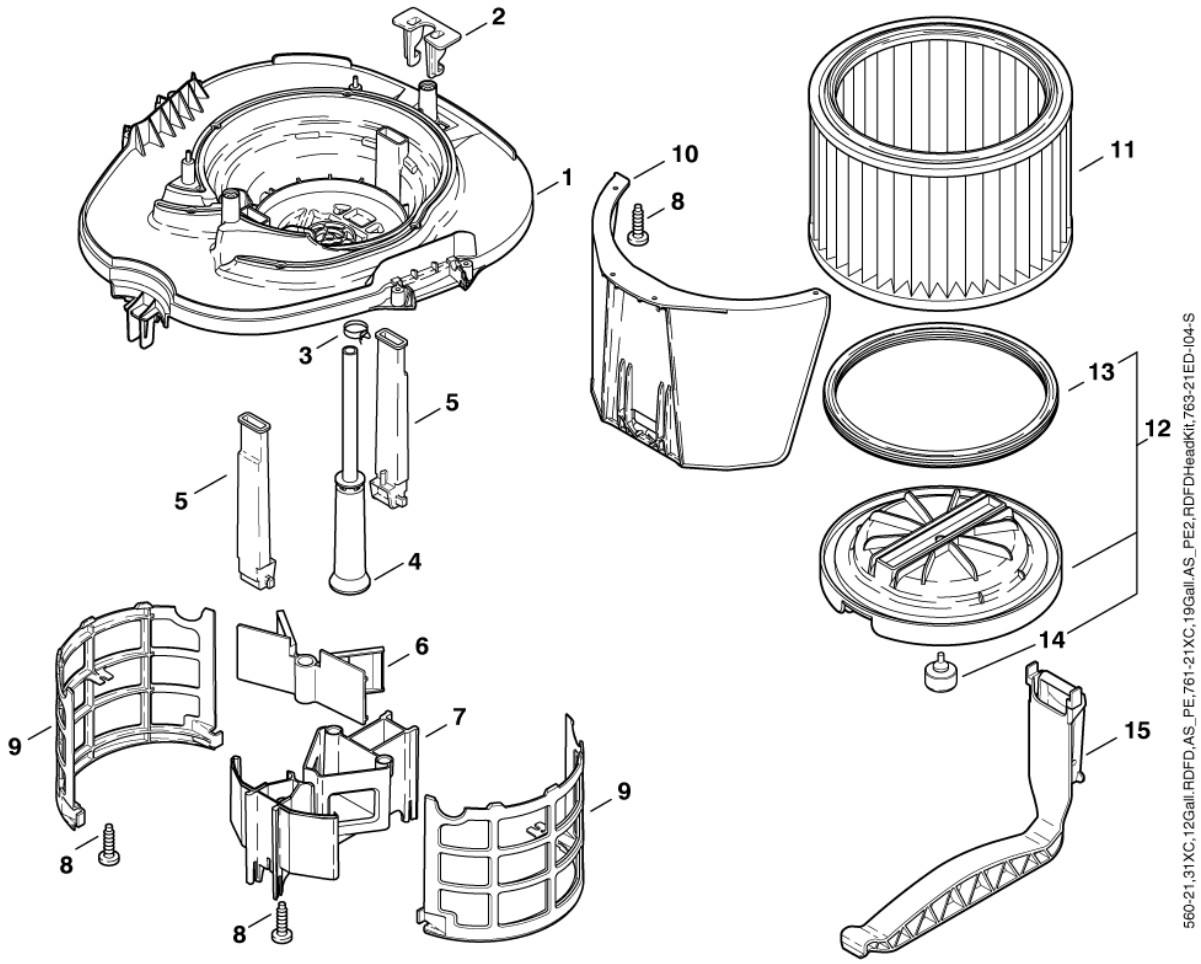

| No. | Part No. | Qty. | Description | Part Note |
|---|---|---|---|---|
| 1 | 107413315 | 1 | BASE PLATE - KIT | |
| 2 | 107413313 | 1 | FIXTURE 72X32X52 - KIT | |
| 3 | 909100137 | 1 | BAND CLAMP FITTING 19 | |
| 4 | 303000516 | 1 | HOSE 40X335 | [1] |
| 4 | 302001473 | 1 | HOSE D40x396 | [2] |
| 5 | 302000514 | 2 | GASKET | |
| 8 | 909100138 | 9 | SCREW 5X20 | |
| 9 | 302000385 | 2 | FILTER SUPPORT CAGE 216X | |
| 10 | 107402640 | 1 | DEFLECTOR 318X180X212 KIT | |
| 11 | 107400562 | 1 | FILTER ELEMENT D275X187 | |
| 11 | 302000751 | 1 | ATTIX FILTER ELEMENT | |
| 12 | 107402653 | 1 | FILTER SURFACE PLATE | |
| 13 | 302000697 | 1 | GASKET FILTER | |
| 14 | 302000515 | 1 | PLUG 33X37 | |
| 15 | 107402651 | 1 | TENSION JACK | |
| K1 | 107412690 | 1 | COVER WITH FLAP ATTIX 560 | [3] |

Part Notes:

[1] - 560-21XC, 560-31XC, 12Gall.RDFD, 12Gall.AS/PE, not 763-21 ED

[2] - 761-21XC, 19Gall.AS/PE2, RDFD Head Kit, not 763-21 ED

[3] - Includes pos. 6+7

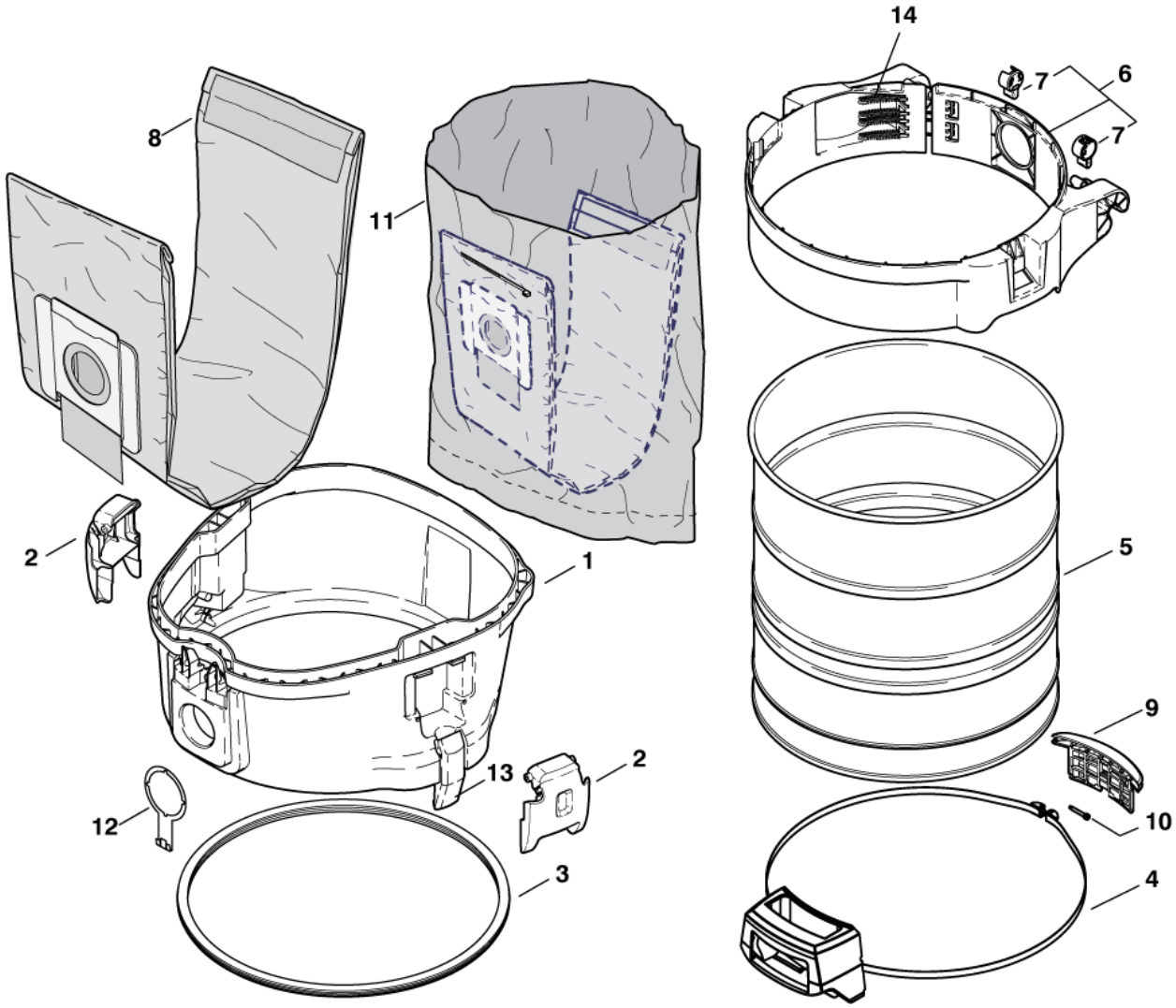
14
7
6
7
8
11
2
1
5
9
13
2
10
12
3
4

| No. | Part No. | Qty. | Description | Part Note |
|---|---|---|---|---|
| 1 | 107400257 | 1 | ADAPTERRING ATTIX7-KIT | |
| 2 | 302000349 | 2 | LOCKING CLAMP ATTIX | |
| 3 | 302001432 | 1 | GASKET CONTAINER | |
| 4 | 302001605 | 1 | HANDLE W/ TAPE | |
| 5 | 107402657 | 1 | CONTAINER R408X430SS | |
| 6 | 302001704 | 1 | BELT CONTAINER 480 SE | |
| 7 | 302001441 | 2 | INTERLOCK CONTAINER ATTIX | |
| 8 | 302001484 | 1 | PAPER BAGS | |
| 8 | 302002892 | 1 | FLEECE FILTERBAG PU 5 PCS | |
| 9 | 302001363 | 1 | CONTAINER STOPPER | |
| 10 | 302001613 | 1 | SCREW M5X35X5 TO ATTIX7 | |
| 11 | 302001480 | 1 | DISPOSAL BAG SET5 " | |
| 12 | 107400145 | 1 | GROUND CONNECTOR | |
| 13 | 19880 | 1 | SPRING CATCH | |
| 14 | 909100383 | 1 | SPRING 1.40X7.5X113 | |

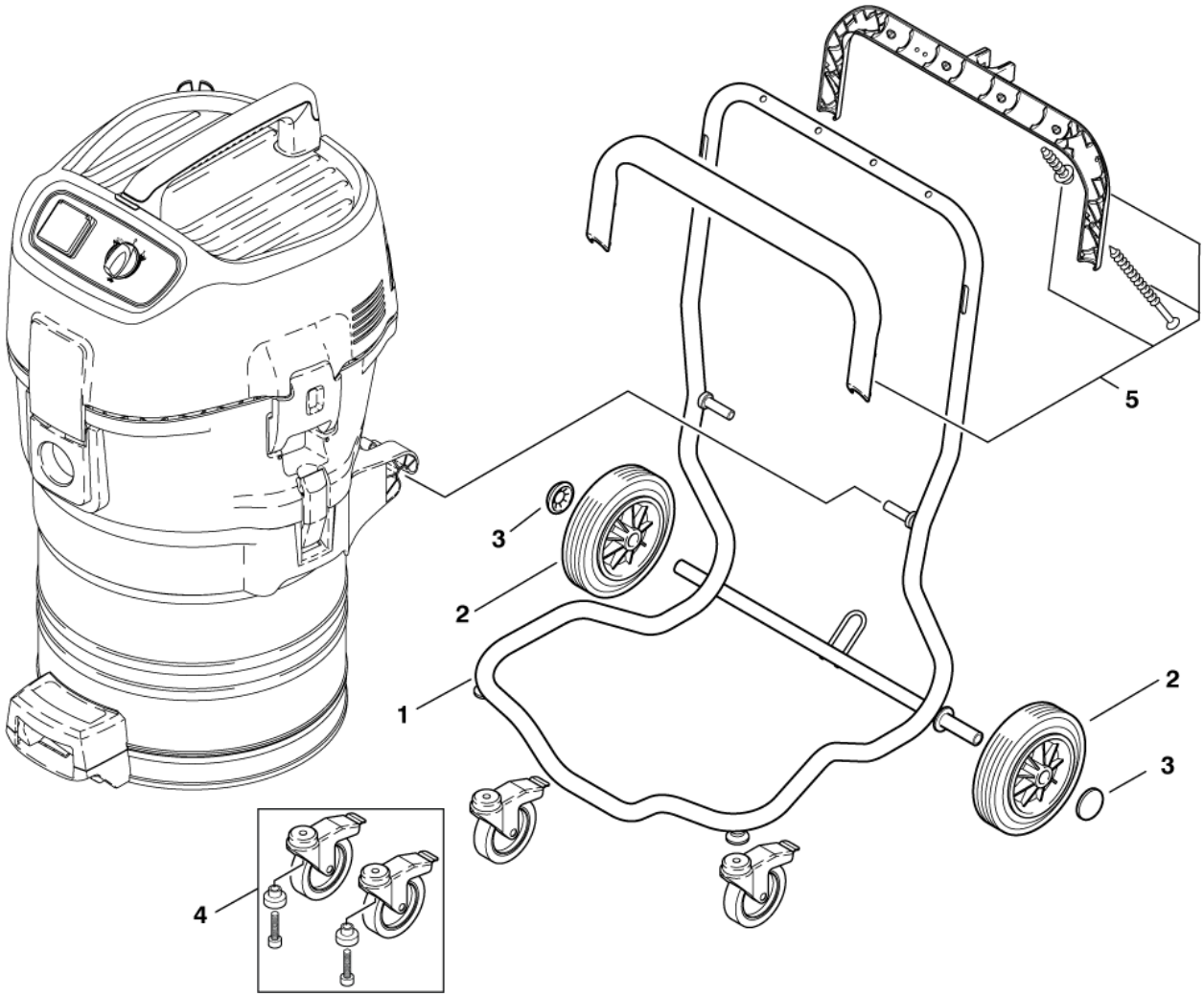
5
3
2
1
2
3
4

| No. | Part No. | Qty. | Description | Part Note |
|---|---|---|---|---|
| 01 | 302001437 | 1 | FRAME BLACK ATTIX 7 | |
| 02 | 107401077 | 2 | WHEEL 200X50 KIT | |
| 03 | 3750 | 2 | WHEEL CAPS TO SUIT TURBO | |
| 04 | 107401054 | 1 | CASTOR TURNABLE WITH BRAK | |
| 05 | 302001706 | 1 | HANDLE SET-1 ATTIX 7 | |

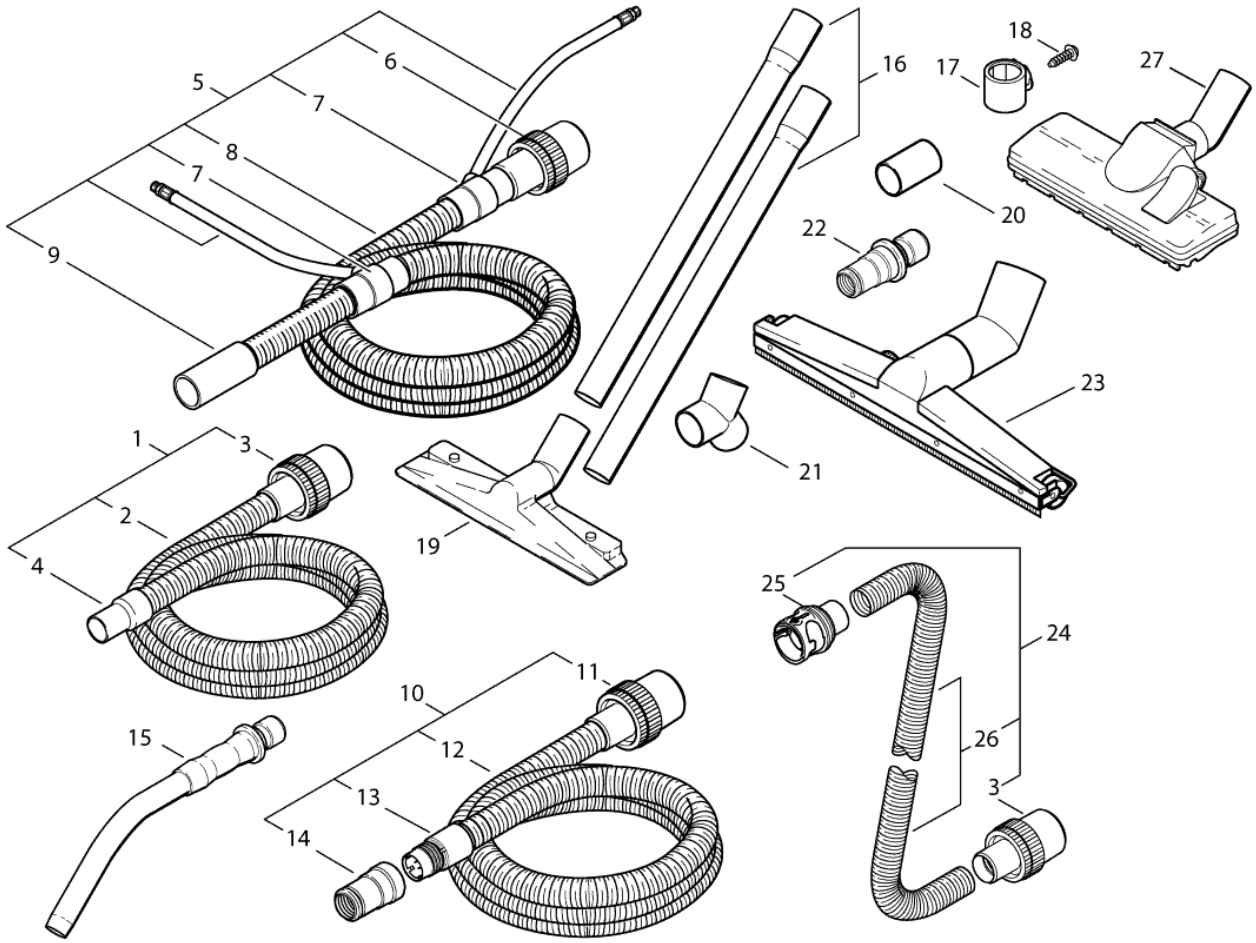
1
2
3
4
5
6
7
7
8
9
10
11
12
13
14
15
16
17
18
19
20
21
22
23
24
25
26
3
27

| No. | Part No. | Qty. | Description | Part Note |
|---|---|---|---|---|
| 00 | 302000477 | 1 | COMBINATION FLOOR TOOL | |
| 1 | 15805 | 1 | HOSE UNIVERSAL D36 X 3000 | |
| 2 | 11985 | 1 | SUCTION HOSE PER METRE 36 | |
| 3 | 15102 | 1 | VACUUM SIDE SLEEVE 36MM | |
| 4 | 11597 | 1 | HOSE SLEEVE 36 | |
| 5 | 26601 | 1 | COAXIAL VACUUM HOSE WITH | [1] |
| 6 | 30928 | 1 | HOSE SLEEVE AS#32/50 | |
| 7 | 26309 | 1 | HOSE SLEEVE DN32 | [2] |
| 8 | 43502 | 1 | 32MM ANTISTATIC | |
| 9 | 60033 | 1 | HOSE SLEVE 5304-1 DN32 | [2] |
| 10 | 107406091 | 1 | HOSE D27X3500 AS WITH | |
| 11 | 15369 | 1 | HOSE CUFF FOR SQ | |
| 12 | 15326 | 1 | HOSE AS 27 P/METER | |
| 13 | 63509 | 1 | HOSE SLEEVE Ø27 | |
| 14 | 107404520 | 1 | TOOL ADAPTER D27/36-24 AS | |
| 15 | 302000528 | 1 | CURVED HAND TUBE Ï36MM C | |
| 15 | 46691 | 1 | CURVED HAND PIECE | |
| 16 | 302000529 | 1 | SUCTION PIPE SALTIX 36MM | |
| 16 | 107408074 | 1 | EXTEN TUBE Ø36 2X505MM SS | |
| 17 | 28546 | 1 | STRAP FOR NOZZLE | |
| 18 | 12400 | 1 | SCREW 3.5X13 | [2] |
| 19 | 5147 | 1 | FLOOR TOOL | |
| 20 | 15953 | 1 | ADAPTOR | |
| 21 | 15331 | 1 | Y PIECE | |
| 22 | 302000535 | 1 | TOOL SLEEVE QUICKSYSTEM Ï | |
| 23 | 15348 | 1 | GROUND NOZZLE | |
| 24 | 302001682 | 1 | HOSED 36 X 5000 MM | |
| 25 | 107417867 | 1 | HOSE SLEEVE Ø36 AS QUICKSYSTEM | |
| 26 | 15312 | 1 | SUCTION HOSE 1 MTR | |
| 27 | 302000477 | 1 | COMBINATION FLOOR TOOL | |

Part Notes:

[1] - PRUNED - NO REPLACEMENT
[2] - STOCK COVERS GUARANTEE

| No. | Part No. | Qty. | Description | Part Note |
|---|---|---|---|---|
| 01 | 107413315 | 1 | BASE PLATE - KIT | |
| 01 | 11832 | 1 | SOCKET | |
| 01 | 302001441 | 1 | INTERLOCK CONTAINER ATTIX | |
| 01 | 107400271 | 1 | CORD H07BQ-F 3G2.5 GB | [1] |
| 01 | 302004034 | 1 | SOCKET 16A/250V EU | [2] |
| 01 | 47302 | 1 | CLAMP RING | |
| 01 | 14808 | 1 | COUPLING FEMALE G1/4 | [3] |
| 01 | 3750 | 1 | WHEEL CAPS TO SUIT TURBO | |
| 01 | 107400270 | 1 | CORD H05RR-F 3G1.5 BS1 | [4] |
| 01 | 60561 | 1 | MOTOR-TURBINE 1200W 22/2 | [5] |
| 01 | 107404779 | 1 | HOSE 27X3500 CONDUCTIVE | [6] |
| 01 | 64937 | 1 | SCREENING FILTER | [7] |
| 01 | 302001711 | 1 | ELECTRONIC 100-120V SET1 | [8] |
| 01 | 302001482 | 1 | PIPE COUPLING C 1.1/4/ | |
| 01 | 26784 | 1 | MOTOR 120V 1200W | [9] |
| 01 | 302000428 | 1 | FLOW SENSOR ATTIX 3,5,7 | |
| 01 | 107412690 | 1 | COVER WITH FLAP ATTIX 560 | |
| 01 | 302000751 | 1 | ATTIX FILTER ELEMENT | |
| 01 | 6114 | 1 | RUBBER STRIP SET FOR 5149 | |
| 01 | 19880 | 1 | SPRING CATCH | |
| 01 | 29205 | 1 | SEAL | [10] |
| 01 | 302000433 | 1 | POWER CORD H05RR-F 3G0.75X8.2 DK | [11] |
| 01 | 107402254 | 1 | GASKET KIT D42X58X6 | |
| 01 | 107402635 | 1 | ELECTROMAGNET 24V KIT | [12] |
| 01 | 302000853 | 1 | PC BOARD/SWITCH | [13] |
| 01 | 302000693 | 1 | SUCTION HOSE 32X3000 | [14] |
| 01 | 107402642 | 1 | POWER CORD H05RR-F | [15] |
| 01 | 107406091 | 1 | HOSE D27X3500 AS WITH | [16] |
| 01 | 302000432 | 1 | POWER CORD H05RR-F 3G0.75X8.2M SNV -CH | [17] |
| 01 | 107402655 | 1 | TEMPERATURE SENSOR KIT | [18] |
| 01 | 61174 | 1 | EARTHING CABLE | |
| 01 | 909100204 | 1 | ROTARY KNOB 06X5 | [19] |
| 01 | 302000297 | 1 | PUMP SUBM. | [20] |
| 01 | 302000307 | 1 | PUMP SUBM. 115/60 650WC | [21] |
| 01 | 302000435 | 1 | POWER CORD SJTW-A AWG18/3X8.2M NEMA -US | [22] |
| 01 | 107400145 | 1 | GROUND CONNECTOR | |
| 01 | 15352 | 1 | RUBBER LIP SET | [18] |
| 01 | 42538 | 1 | MOTOR BEARING RING SET E | [23] |
| 01 | 302001678 | 1 | AIR MANIFOLD ASSY. SET | [24] |
| 01 | 302000825 | 1 | ELECTRONIC SOFT START 100- | [25] |
| 01 | 302000833 | 1 | CONTROL BOARD EC DRIVE | [26] |
| 01 | 302001704 | 1 | BELT CONTAINER 480 SE | |
| 01 | 7729 | 1 | GEKA THREADED FITTING | |
| 01 | 15805 | 1 | HOSE UNIVERSAL D36 X 3000 | |
| 01 | 6429 | 1 | OIL RESISTANT HOSE 36MM | [18] |
| 01 | 107402651 | 1 | TENSION JACK | |
| 01 | 302000373 | 1 | AIR DUCT | |
| 01 | 107402641 | 1 | POWER CORD H05RR-F | [27] |
| 01 | 302000529 | 1 | SUCTION PIPE SALTIX 36MM | |
| 01 | 302000460 | 1 | GASKET | [18] |
| 01 | 107400574 | 1 | CORD H05BQ-F 3G1.0 CEE GB 110 | [28] |
| 01 | 302004338 | 1 | SOCKET 15A/125V US/CSA | [29] |
| 01 | 302000514 | 1 | GASKET | |
| 01 | 302001553 | 1 | SEAL CLAMP | |
| 01 | 302001552 | 1 | SEAL CLAMP | |
| 01 | 15348 | 1 | GROUND NOZZLE | |
| 01 | 107401054 | 1 | CASTOR TURNABLE WITH BRAK | |
| 01 | 302001425 | 1 | ELECTRONIC EA.W.SPEED EC | [16] |

| No. | Part No. | Qty. | Description | Part Note |
|---|---|---|---|---|
| 01 | 302001605 | 1 | HANDLE W/ TAPE | |
| 01 | 302000823 | 1 | CONTACT SPRING 41.8x14 AS | [30] |
| 01 | 302000385 | 1 | FILTER SUPPORT CAGE 216X | |
| 01 | 26783 | 1 | MOTOR 100V 1200W | [31] |
| 01 | 47364 | 1 | PACKING RING 108X86X18 | |
| 01 | 107400579 | 1 | PIEZO BUZZER | |
| 01 | 26774 | 1 | CARBON BRUSH SET M | [32] |
| 01 | 107413310 | 1 | FILTER SUPPORT CAGE - KIT | |
| 01 | 302000430 | 1 | POWER CORD H05RR-F 3G0.75X8.0 | [33] |
| 01 | 302001363 | 1 | CONTAINER STOPPER | |
| 01 | 302000637 | 1 | GASKET | [18] |
| 01 | 14809 | 1 | COUPLING MALE G1/4 | [3] |
| 01 | 15475 | 1 | FILTER SIEVE 450-650 | |
| 01 | 302004333 | 1 | POWER CORD AU | [34] |
| 01 | 302000349 | 1 | LOCKING CLAMP ATTIX | |
| 01 | 302000685 | 1 | POWER CORD H05RR-F3G0.75X8.4 S | [35] |
| 01 | 107402646 | 1 | FILTER SUPPORT CAGE | |
| 01 | 107402842 | 1 | OUTLET 2P AND PE 16A 110V | [36] |
| 01 | 107402627 | 1 | MOTOR BEARING RING SET EC | [37] |
| 01 | 107400059 | 1 | SOCKET 16A/250V CH | [38] |
| 01 | 60877 | 1 | BRACKET | |
| 01 | 302004336 | 1 | SOCKET 13A/250V GB | [39] |
| 01 | 48333 | 1 | FINE-WIRE FUSE 6,3X32 10 | [26] |
| 01 | 302000826 | 1 | SOFT START ( ATTIX) | [40] |
| 01 | 49625 | 1 | CARBON BRUSH C | [37] |
| 01 | 302000217 | 1 | ELECTROMAGNET 12V | [41] |
| 01 | 26785 | 1 | MOTOR 120V 1000W | [42] |
| 01 | 302001682 | 1 | HOSED 36 X 5000 MM | |
| 01 | 302000490 | 1 | FILTER ELEMENT "L"185X1 | |
| 01 | 302000852 | 1 | ELECTRONIC 120V SET1 | [43] |
| 01 | 107410490 | 1 | COLLAR | |
| 01 | 302001434 | 1 | FILTER SIEVE BASKET | |
| 01 | 107402618 | 1 | PIPE COUPLING KIT | |
| 01 | 26601 | 1 | COAXIAL VACUUM HOSE WITH | [44] |
| 01 | 107401077 | 1 | WHEEL 200X50 KIT | |
| 01 | 62359 | 1 | GASKET 9X4X1 | |
| 01 | 11985 | 1 | SUCTION HOSE PER METRE 36 | |
| 01 | 15349 | 1 | GROUND NOZZLE WITH RUBBER | [18] |
| 01 | 302000528 | 1 | CURVED HAND TUBE Ï36MM C | |
| 01 | 28875 | 1 | MOTOR BEARING RING SET | [45] |
| 01 | 49594 | 1 | MOTOR SQ 1200 X 24 | [46] |
| 01 | 107408926 | 1 | ELECTRONIC-UNIT EA M. | [47] |
| 01 | 302000434 | 1 | POWER CORD H05RR-F 3G0.7 | [48] |
| 01 | 107408074 | 1 | EXTEN TUBE Ø36 2X505MM SS | |
| 01 | 302001708 | 1 | POWER CORD SJTW-A AWG | [49] |
| 01 | 302000372 | 1 | BASE | [18] |
| 01 | 302000627 | 1 | ELECTRONIC 110-120V SET1 | [50] |
| 01 | 302001432 | 1 | GASKET CONTAINER | |
| 01 | 107402619 | 1 | SCREENING FILTER KIT | [26] |
| 01 | 47035 | 1 | COLLAR 55 SHORE A EPDM | [51] |
| 01 | 11753 | 1 | FILTER CARTRIDGE | [52] |
| 01 | 107400267 | 1 | CORD H05RR-F 3G1.0CH | [53] |
| 01 | 302001580 | 1 | POWER CORD H07RN-F 3G1.5X10.7 | [18] |
| 01 | 302001546 | 1 | GASKET | [54] |
| 01 | 107413313 | 1 | FIXTURE 72X32X52 - KIT | |
| 01 | 107411687 | 1 | SILIKON HOSE D3X1,5 | |
| 01 | 107400257 | 1 | ADAPTERRING ATTIX7-KIT | |
| 01 | 302001185 | 1 | 10A SOCK(FIT to MACHINE!) | [34] |

| No. | Part No. | Qty. | Description | Part Note |
|---|---|---|---|---|
| 01 | 26775 | 1 | CARBON BRUSH SET FOR | [55] |
| 01 | 65058 | 1 | FINE-WIRE FUSE | [7] |
| 01 | 107402638 | 1 | PLATE CHUCK ATTIX 550 PP KIT | [56] |
| 01 | 302001712 | 1 | ELECTRONIC 220-240V SET1 | [57] |
| 01 | 302004332 | 1 | POWER CORD SJTW-A AWG14/3X8.4 US | [58] |
| 01 | 302001430 | 1 | ELECTRONIC EC 110V SET-1 | [7] |
| 01 | 302001641 | 1 | ADAPTER ATTIX | [59] |
| 01 | 302000756 | 1 | SWITCH/COVER | [60] |
| 01 | 107402639 | 1 | PLATE CHUCK ATTIX 560 PP | |
| 01 | 302000683 | 1 | SOCKET 10A/250V DK | [61] |
| 01 | 302000477 | 1 | COMBINATION FLOOR TOOL | |
| 01 | 5149 | 1 | SPECIAL GROUND NOZZLE | |
| 01 | 107402653 | 1 | FILTER SURFACE PLATE | |
| 01 | 302000697 | 1 | GASKET FILTER | |
| 01 | 302000465 | 1 | WHEEL ATTIX | |

Part Notes:

[1] - GB,110V 751-11/21, 761-21
[2] - EU -590-21, 751-11/21, 761-71, 791-21
[3] - 560-31XC
[4] - GB,230V 751-01/11/21, 761-21
[5] - 590-21, 791-21,, 791-2M/B1EUGB,230V
[6] - 791-2M/B1
[7] - EC 12GALLON AS/E, 791-2M/B1GB,110V
[8] - 100-120V 751-61-71
[9] - 110-120V/1200W 751-71
[10] - FOR IDENTIF. LETTER L+M
[11] - DK 751-01
[12] - FOR 220-240V
[13] - 220-240V 761-21
[14] - EC 12 GALLON AS/E
[15] - DK 751-61
[16] - 590-21, 791-21
[17] - CH 751-01
[18] - 751-71
[19] - 751-61-71
[20] - 230V/50HZ
[21] - 115V/60HZ
[22] - US 751-01
[23] - FOR IDENITF. LETTER C
[24] - 19GALLON AS/PE2
[25] - 100-120V, 751-11GB,110/50, 19GALL.
[26] - 590-21, 791-21, 791-2M/B1EUGB,230V
[27] - EU 751-61, 791-21
[28] - GB 751-01
[29] - US 751-11/21 761-21
[30] - GB,230V
[31] - 100V/1200W 751-71
NO LONGER AVAILABLE
[32] - FOR IDENTIF. LETTER M
[33] - EU 751-01
[34] - AU
[35] - ZA 751-01
[36] - GB,110V 751-11/21
[37] - FOR IDENTIF. LETTER C
[38] - CH 751-11/21 761-21
[39] - GB,230V 751-11/21, 761-21
[40] - 220-240V, 751-11 -21 19 GALL.

[41] - FOR 100-120V
[42] - 120V/1000W 751-71
[43] - 100-120V 761-21
[44] - PRUNED - NO REPLACEMENT
[45] - FOR IDENTIF.LETTERL+M
[46] - 220-240V/1200W 751-71
[47] - 220-240V, 550-21, 751-21, 751-11
[48] - AU 751-01
[49] - 751-71 19GALLON AE
[50] - 100-120V, 12GALL.RDF 751-11 -21
[51] - 19GALL.AE
[52] - ZA
[53] - CH 751-61
[54] - 791-21, 791-2M/B1
[55] - FOR IDENTIF. LETTER L
[56] - 590-21, EC 12GALLON AS/E, 791-21
[57] - 220-240V 751-61-71
[58] - US 751-11/21
[59] - 751-01, 751-11, 751-21, 19GALL., 791-21, 791-2M/B1
[60] - 550-1, 12 GALLON, 751-01
[61] - DK 751-11/21, 761-21

© 2018 - Nilfisk A/S