R14

Dual Technology Rider Carpet Cleaner

Parts Manual



READY SPACE®

More than clean, it's ReadySpace.®

Hygenic® Fully Cleanable Tanks

North America / APAC

For the latest Parts manuals and other language Operator manuals, visit:

www.tennantco.com/manuals

1032125
Rev. 12 (07-2022)

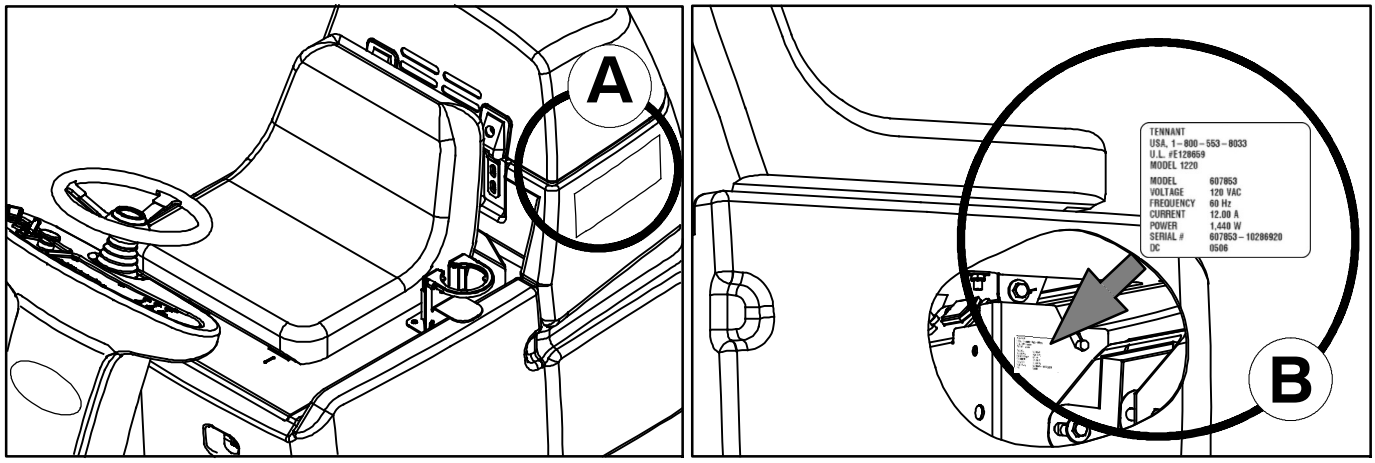

Ref	Part No.	Serial Number	Description	Qty.
1	82681	(000000-)	Bracket Wldt, Lpg Mount	1
▽ 2	63810	(000000-)	Latch Assy, Lpg Tank Mtg, W/Nut	4
▲ 3	51839	(000000-)	Nut Adjustable, Lpg Tank Mtg	2
4	49263	(000000-)	Tie, Cable	3
D	82556	(000000- 001039)	Bracket, Vaporizer	1
	54930	(000000-)	Vaporizer, LPG	1

C

HOW TO ORDER PARTS - See diagram above

Only use TENNANT Company supplied or equivalent parts. Parts and supplies may be ordered online, by phone, by fax or by mail.

Follow the steps below to ensure prompt delivery.

1. **(A)** Identify the machine model.
2. **(B)** Identify the machine serial number from the data label.
3. **(C)** Ensure the proper serial number is used from the parts list.
4. Identify the part number and quantity. Do not order by page or reference numbers.
5. Provide your name, company name, customer ID number, billing and shipping address, phone number and purchase order number.
6. Provide detail shipping instructions.

(D) ▽ - identifies an assembly
▲ - identifies parts included in assembly

Please fill out at time of installation for future reference.

Model No. - _____

Serial No. - _____

Machine Options - _____

Sales Rep. - _____

Sales Rep. phone no. - _____

Customer ID Number - _____

Installation Date - _____

Tennant Company
10400 Clean Street
Eden Prairie, MN 55440
Phone: (800) 553-8033

www.tennantco.com

TENNANT Company Japan
9F Industry & Trade Center
2 Yamashita-cho, Naka-ku
Yokohama, Kanagawa 231-0023
Japan
Phone: 81-45-640-5630
Fax: 81-45-640-5604
www.tennant.co.jp

Specifications and parts are subject to change without notice.

Copyright © 2006-2022 TENNANT Company, Printed in U.S.A.

JP

パーツの発注方法 ?上記の図を参照してください

TENNANT社製のパーツまたは同等品のみをお使いください。
パーツやサプライ品のご注文は、オンライン、電話、FAX、または手紙でお願いいたします。
確実にお届けできるように、以下の情報お知らせください。

1. **(A)** 製品のモデル名をお知らせください。
2. **(B)** 製品のデータラベルに印刷されているシリアル番号をお知らせください。
3. **(C)** パーツリストを参照して、シリアル番号が正しいかご確認ください。
4. パーツ番号と数量をお知らせください。マニュアル/カタログのページ番号や参照番号でのご注文はご遠慮ください。
5. お客様のお名前、会社名、顧客ID番号、請求/発送先住所、電話番号、注文書番号をお知らせください。
6. 発送に関するご希望があれば、明記してください。

(D) ▽ - アセンブリを示します
▲ - アセンブリに含まれるパーツを示します

後日確認できるように、設置時に記入してください。

モデルNo. - _____

シリアルNo. - _____

製品のオプション- _____

販売代理店 - _____

販売代理店の電話番号 - _____

顧客ID番号 - _____

設置日 - _____

STANDARD PARTS

GENERAL RECOMMENDED MAINTENANCE ITEMS 7
REPLACEMENT ROLLERS AND BRUSHES GROUP 9
MAIN FRAME GROUP 10
SEAT GROUP (S/N 10963066 -) 12
SEAT GROUP (S/N 00000000 - 10963065) . 14
STEERING GROUP 16
INSTRUMENT PANEL GROUP 18
FRONT DRIVE WHEEL GROUP 20
BRAKE PEDAL AND ACCELERATOR PEDAL GROUP (S/N 10644406-) 22
BRAKE PEDAL AND ACCELERATOR PEDAL GROUP (S/N 10508137- 10644405) 24
BRAKE PEDAL AND ACCELERATOR PEDAL GROUP (S/N 00000000- 10508136) 26
RECOVERY TANK GROUP 28
VACUUM FAN GROUP 30
SOLUTION TANK GROUP 32
TANKS DRAIN GROUP 34
CIRCUIT BOARD GROUP 36
ELECTRICAL GROUP 38
VACUUM FLOOR TOOL GROUP 40
SCRUB HEAD GROUP 42
SCRUB HEAD GROUP - CONT'D 44
SCRUB HEAD LIFT GROUP 46
VACUUM SHOE AND SOLUTION FLUSH LINE GROUP 48
SOLUTION GROUP 50
SOLUTION GROUP - CONT'D 52
BATTERY GROUP, 360Ah 54
LABEL GROUP 56
ELECTRICAL DIAGRAM 58
ELECTRICAL WIRE HARNESS GROUP - SECTION 1 OF 5 60
ELECTRICAL WIRE HARNESS GROUP - SECTION 2 OF 5 61
ELECTRICAL WIRE HARNESS GROUP - SECTION 3 OF 5 (S/N 10389602-) . . 62
ELECTRICAL WIRE HARNESS GROUP - SECTION 3 OF 5 (S/N 00000000- 10389601) 63
ELECTRICAL WIRE HARNESS GROUP - SECTION 4 OF 5 64
ELECTRICAL WIRE HARNESS GROUP - SECTION 5 OF 5 65

OPTIONS

BATTERY CHARGER GROUP 66
MANUAL BATTERY WATERING SYSTEM (S/N 11021176 -) 68
HYDROLINK® BATTERY WATERING SYSTEM KIT (S/N 00000000 - 11021175) 70
WAND GROUP, LOW PRESSURE 13 in / 330 mm 72
WAND GROUP, LOW PRESSURE 16 in / 406 mm 74
HAND TOOL, 5 in / 127 mm 76
HAND TOOL, CREVICE 3 in / 76 mm 77
HAND TOOL, UPHOLSTERY, LOW PRESSURE 78
HOSES, SOLUTION AND VACUUM GROUP 79
SPRAYER GROUP 80
FLASHING LIGHT KIT 81
BASKET KIT 82
SEATBELT KIT 83
DOCUMENTATION GROUP 84

BREAKDOWNS

STEERING CONTROL BREAKDOWN, 1019724 85
FRONT DRIVE WHEEL GEARBOX BREAKDOWN, 9003021 86
PUMP BREAKDOWN, 1022343 88

GENERAL RECOMMENDED MAINTENANCE ITEMS

	Part No.	Serial Number	Description	Qty.
	1020798	(00000000-)	Roller Assy, Soil Transfer, 700mm	2
	1021342	(00000000-)	Brush, Scb, 700mm, 10sr, Nyl, Spl	2
	1038560	(00000000-)	Tire Assy, Solid, 250mmx80mm, 25mm Id	2
∇	1011402	(10403819-)	Switch, Key	1
▲	1017696	(10403819-)	Key Set, Replmt [F/ Keyswitch 1011402]	1
∇	9004968	(00000000- 10403818)	Switch Kit, Key, [T7/Ssr/R14/Strv Rdr]	1
▲	361144	(00000000- 10403818)	Key, Ignition [Set Of 2] (For Key Switch 1016789)	1
	1020301	(00000000-)	Seal, Afmkt, Bulb, Clsd Cell, Adh, 08ft	1
	1037821	(00000000-)	Filter, Panl, Dust, 2.3 X 04.5 X 06.4	1
	1016392	(00000000-)	Gasket, 05.31 X 03.74 X .50, Ure, Adh	1
∇	1013432	(00000000-)	Fan, Vacuum, 5.7d 3stage 024vdc [Bpp]	2
▲	372883	(00000000-)	Vr, Brush Kit, Motor, Ele	2
▲	398511	(00000000-)	Vr, Housing	2
	1011140	(00000000-)	Seal, Fan	2
	9002910	(00000000-)	Seal, Bulb, Str, 0.5h 0.5w 2.014m, Afmkt	1
	1025538	(00000000-)	Gasket, Adapter	1
	1011885	(00000000-)	Cap, Tank	4
	49800	(00000000-)	Latch	2
	1020727	(00000000-)	Seal, Afmkt, Bulb, Clsd Cell, Adh, 08ft	2
	1020719	(00000000-)	Seal, Afmkt, Bulb, Clsd Cell, Adh, 08ft	5
∇	1014274	(00000000-)	Hose Assy, Drain, 1.5d X 27.8l, Blk, 2id	1
▲∇	1008639	(00000000-)	Cap, Drain Assy	1
▲▲	1008637	(00000000-)	Seal, Org, 1.48id 1.76od	1
∇	1014268	(00000000-)	Hose Assy, Drain, 1.5d X 27.0l, Blk	1
▲∇	1008639	(00000000-)	Cap, Drain Assy	1
▲▲	1008637	(00000000-)	Seal, Org, 1.48id 1.76od	1
	1025430	(00000000-)	Gasket, Cover, Floor Tool	2
∇	1068557	(10583279-)	Motor Kit, Ele, 24vdc 0270rpm 0.50hp	2
▲	1059370	(SEP2020-)	Brush, Motor, Replmt [Bag Of 4]	2
▲	1066574	(10583279- OCT2020)	Vr, Brush Kit, Motor (Replaced By 1059370)	2
∇	1023355	(00000000- 10583278)	Motor, Ele, 24vdc 0.50hp 0270rpm 20.0a (Replaced By 1068557)	2
▲	1034117	(00000000- 10583278)	Brush, Carbon, Motor, Ele	2
	1033039	(00000000-)	Gasket, Motor, Brush, W/ Hdpe	2
	575281000	(00000000-)	Fitting, Spray, Body [Quick- Jet]	2
	575276000	(00000000-)	Fitting, Gasket [Quick- Jet]	2
	575283000	(00000000-)	Fitting, Brs, Tip [11002, T- Jet]	2
	575282000	(00000000-)	Fitting, Cap [Q- Jet]	2

∇ ASSEMBLY

▲ INCLUDED IN ASSEMBLY

GENERAL RECOMMENDED MAINTENANCE ITEMS

	Part No.	Serial Number		Description	Qty.
	377500	(00000000-	)	Belt, Synchronous, 05mm 500l[05p,Plychn]	2
	41360	(00000000-	)	Bearing, Ball, 0.59b 1.26d 0.35w[2seal]	4
	1008675	(00000000-	)	Gasket, Edge, Foam, 24.00l [Fr]	2
	1023890	(00000000-	)	Tool, Vacuum, Str Rlr [Finish Mach'D]	2
	1021110	(00000000-	)	Gasket, Cover, Str Roll Vacuum Tool	2
∇	9002902	(00000000-	)	Hose Assy, Lh, Afmkt [Gator]	1
▲	1017902	(00000000-	)	Seal, Org, .070 X 00.24id, 75d [Viton]	2
▲	1017841	(00000000-	)	Fitting, Brs, Tip, Spcl [2505 H1/8vv]	2
▲	1017902	(00000000-	)	Seal, Org, .070 X 00.24id, 75d [Viton]	2
	1022343	(00000000-	)	Pump, Water, 24vdc, 2.0gpm 250psi	1
∇	1007428	(00000000-	)	Filter, Screen, 080 Mesh, Ss Bowl, Pf06	1
▲	180632	(00000000-	)	Filter, Screen, In- Line Strainer	1
	1006924	(00000000-	)	Filter, Soltn, W/ E90 Ftg	1
	575281000	(00000000-	)	Fitting, Spray, Body [Quick- Jet]	4
	575276000	(00000000-	)	Fitting, Gasket [Quick- Jet]	4
	575283000	(00000000-	)	Fitting, Brs, Tip [11002, T- Jet]	2
	575282000	(00000000-	)	Fitting, Cap [Q- Jet]	2
	575603	(00000000-	)	Filter, Screen, 024 Mesh, Check Valve	2
	1022378	(00000000-	)	Fitting, Brs, Tip [11006e, Unijet]	2
	1022715	(00000000-	)	Cap, White [Quick- Jet]	2
	611221	(00000000-	)	Boot, Terminal, Battery, 25.4mm, Blk	8
	12694	(00000000-	)	Fitting, Plstc, Str, Bm24/Bm24	1

∇ ASSEMBLY

▲ INCLUDED IN ASSEMBLY

REPLACEMENT ROLLERS AND BRUSHES GROUP

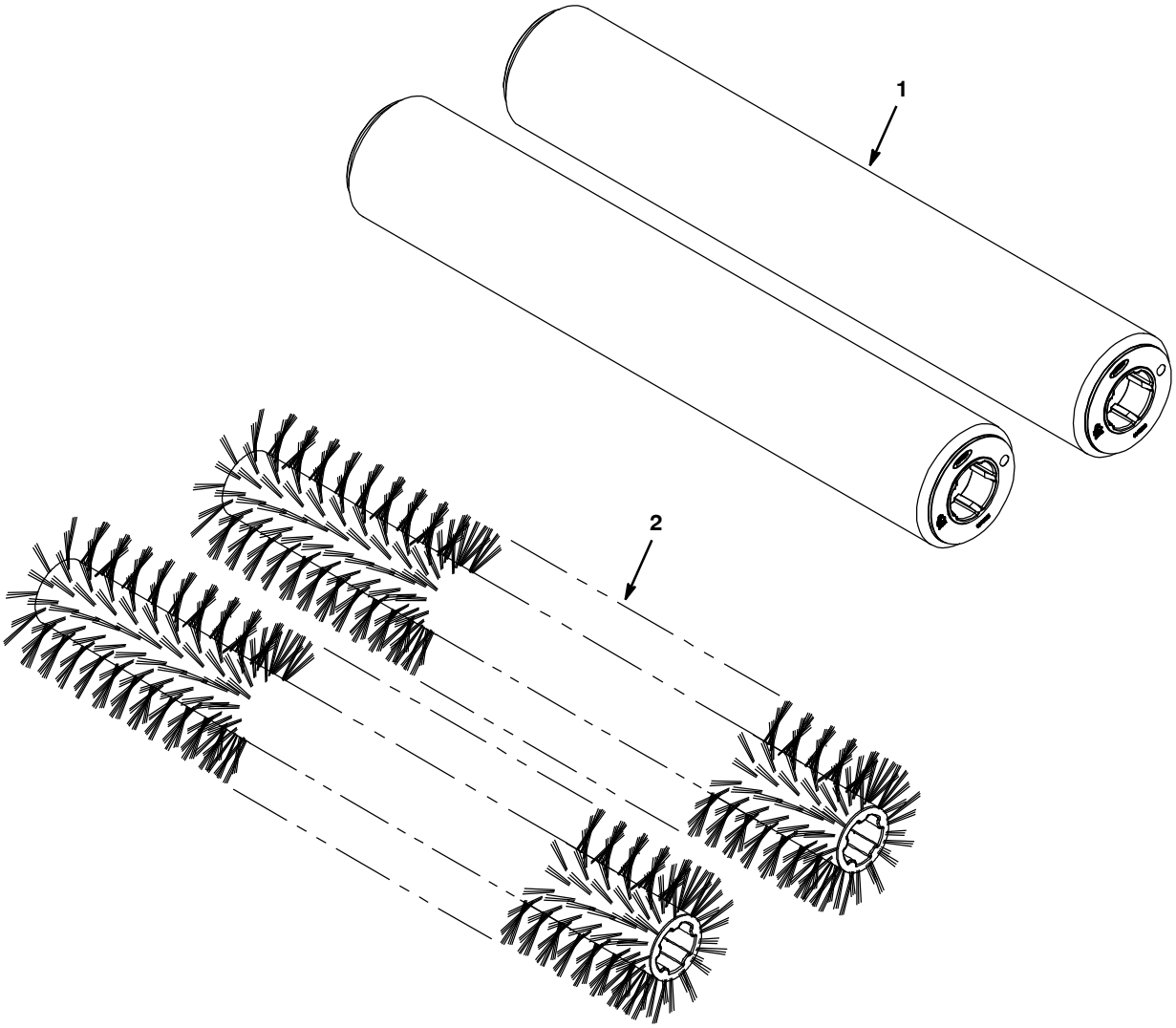

Ref.	Part No.	Serial Number		Description	Qty.
1	1020798	(00000000-	)	Roller Assy, Soil Transfer, 700mm	2
2	1021342	(00000000-	)	Brush, Scb, 700mm, 10sr, Nyl, Spl	2

MAIN FRAME GROUP

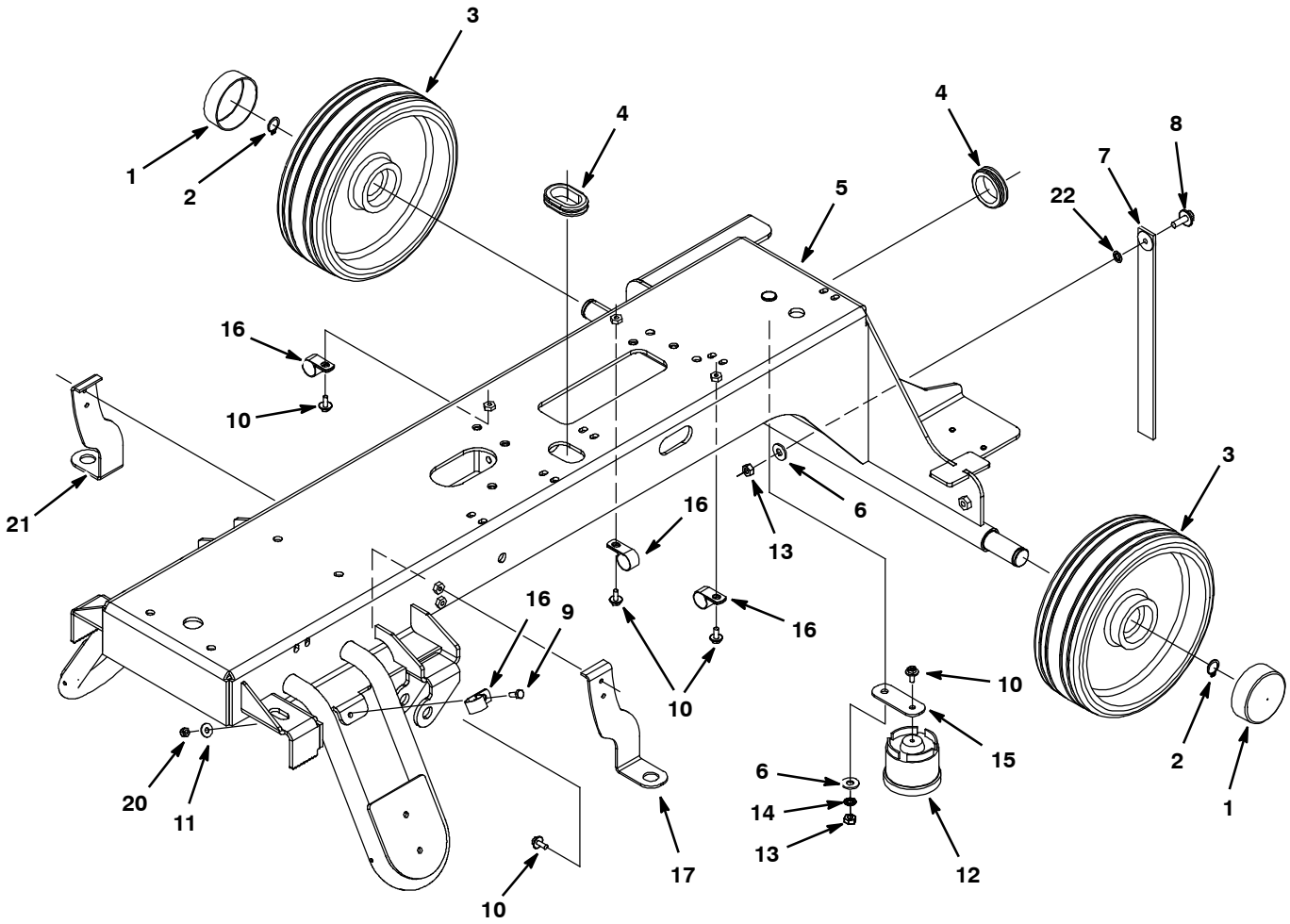

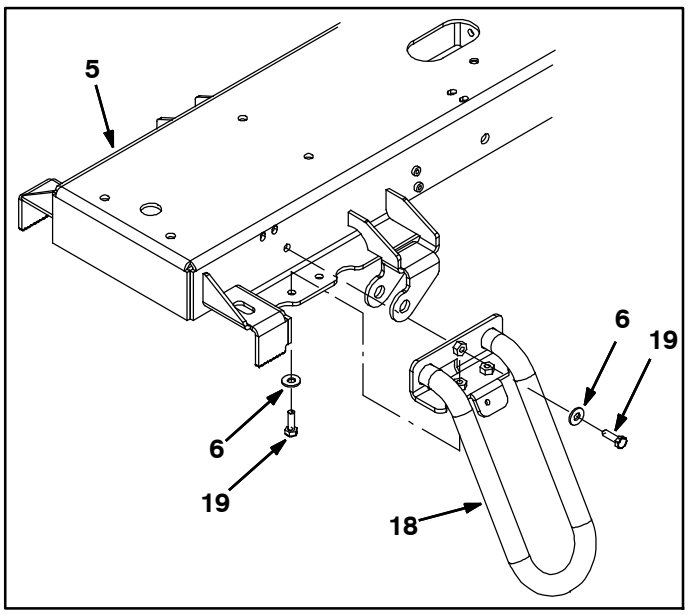

MAIN FRAME GROUP

Ref.	Part No.	Serial Number	Description	Qty.
1	1016957	(00000000-)	Cap, Vyl, 70mmid X 25mml	2
2	09005	(00000000-)	Ring, Retaining, Ext, 1.00d, Basic	2
3	1038560	(00000000-)	Tire Assy, Solid, 250mmx80mm, 25mm Id	2
4	10632-13	(00000000-)	Grommet, Rbr, 1.50id, F/1.8h, .19 Matl	2
5	1056133	(10907665-)	Frame Wldt, Main, Cyl, 80cm [T7]	1
5	1054035	(10448499-10907664)	Frame Wldt, Main [R14, T7 Cyl] (Replaced By 1056133)	1
5	1023551	(00000000-10448498)	Frame, Wldt (Replaced By 1054035)	1
6	01685	(10448499-)	Washer, Flat, 0.31, Ss	2
6	01685	(00000000-10448498)	Washer, Flat, 0.31, Ss	9
7	1014318	(00000000-)	Strap, Static, 10.3l [Afmkt]	1
8	1072628	(00000000-)	Screw, Hex, M8 X 1.25 X 25, Ss, Sems	1
9	08716	(00000000-)	Screw, Hex, M6 X 1.0 X 20, Ss	1
10	1034731	(00000000-)	Screw, Hex, M6 X 1.00 X 16, Sems, Ss	8
11	01684	(00000000-)	Washer, Flat, 0.25, Ss	1
12	1018505	(00000000-)	Horn, 12-48vdc	1
13	08713	(00000000-)	Nut, Hex, Lock, M8 X 1.25, Nl, Ss	2
14	43952	(00000000-)	Washer, Lock, Int, 0.31, Ss	1
15	1025354	(00000000-)	Plate, Mtg, Horn	1
16	40678-1	(00000000-)	Clamp, Cable, Stl, 0.88d X 0.62w, 1hole	4
17	1025383	(00000000-)	Bracket, Jet, Spray, Lh	1
18	1025473	(00000000-10448498)	Stabilizer Wldt (Replaced By 1054035)	2
19	09740	(00000000-10448498)	Screw, Hex, M8 X 1.25 X 20, Ss	6
20	08712	(00000000-)	Nut, Hex, Lock, M6 X 1.00, Ss, Nl	1
21	1025389	(00000000-)	Bracket, Jet, Spray, Rh	1
22	41141	(00000000-)	Washer, Lock, Int-Ext, 0.31	1

SEAT GROUP (S/N 10963066 -)

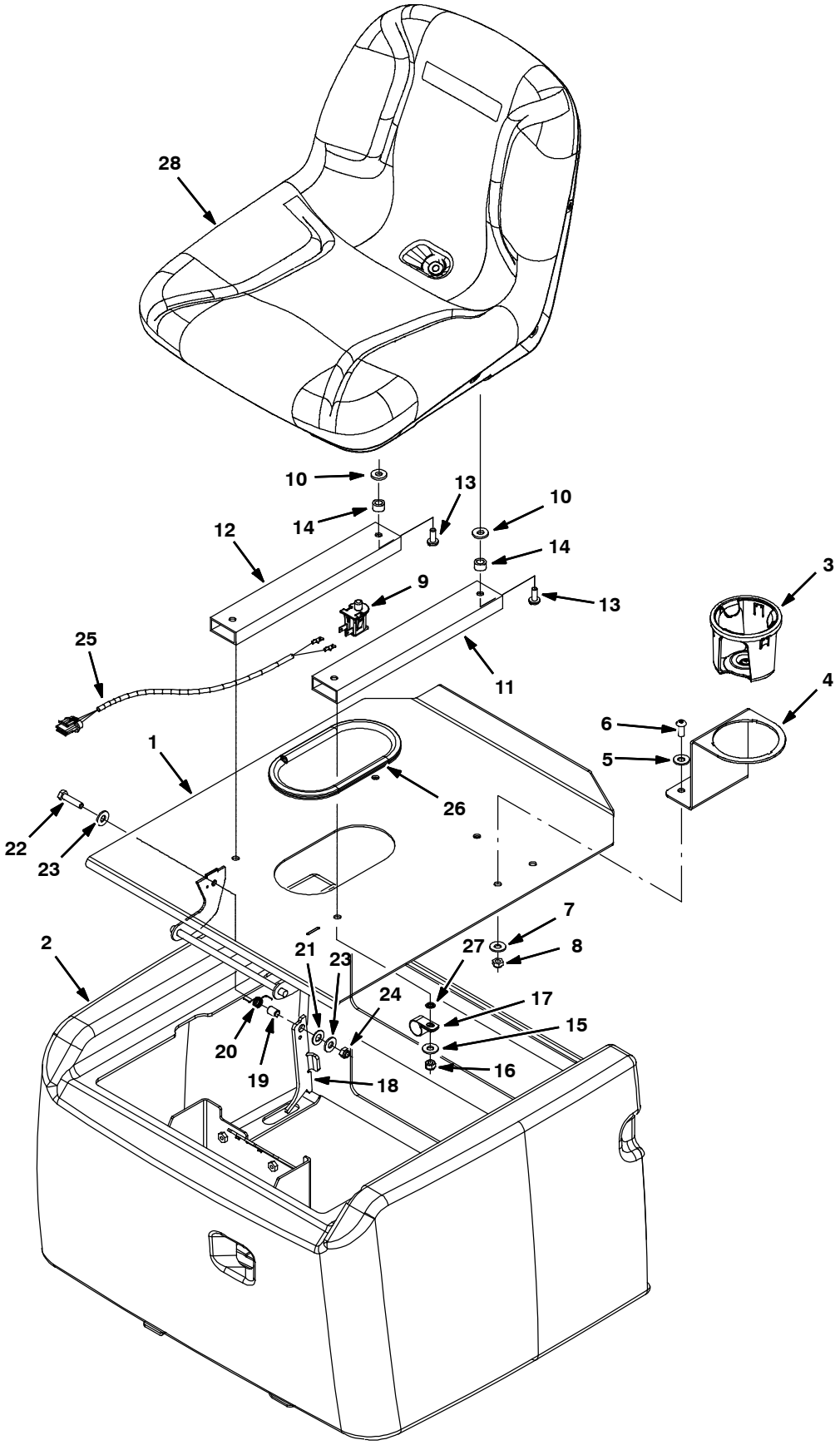

SEAT GROUP (S/N 10963066 -)

	Ref.	Part No.	Serial Number	Description	Qty.
	1	1015406	(00000000-)	Plate, Seat, W/ Label	1
	2	9002898	(00000000-)	Cover, Box, Battery, Trim [R14]	1
∇		1038062	(10382116-)	Holder Kit, Cup, Assy [T7]	1
▲	3	1025867	(10382116-)	Holder, Cup, Blk [T7]	1
▲	4	1038081	(10382116-)	Holder, Cup, Brkt, Blk, [T7]	1
▲	5	1016435	(00000000-)	Washer, Flat, 0.38b 0.90d .08, Stl, Blk	2
▲	6	393135	(00000000-)	Screw, Btn, M8 X 1.25 X 20, Blk	2
▲	7	01685	(00000000-)	Washer, Flat, 0.31, Ss	2
▲	8	08713	(00000000-)	Nut, Hex, Lock, M8 X 1.25, Nl, Ss	2
	9	1048955	(10400497-)	Switch, Seat, No [Delta 6440- 04]	1
	10	69461	(10400497-)	Washer, Flat, 0.38b 0.88d .12, Stl, Pl	4
	11	1017053	(00000000-)	Rail, Adj, Slide, Seat, 11.5l	1
	12	1074205	(00000000-)	Rail, Adj, Slide Seat,11.5l, W/Latch,Yel	1
	13	76956	(10611440-)	Screw, Hex, .31- 18 X 1.25, G5	4
	14	1051052	(10400497-)	Spacer, Rnd, .38b .88d .38l	4
	15	32491	(00000000-)	Washer, Flat, 0.31, Std	4
	16	01760	(00000000-)	Nut, Hex, Lock, .31- 18, Nl, Thin	4
	17	46236	(00000000-)	Clamp, Cable, Stl, 0.25d X 0.56w, 1h	1
	18	1016000	(00000000-)	Plate, Stop, Seat	1
	19	1017699	(00000000-)	Sleeve, P/M, 0.31b 0.44d 0.6l [430ss]	1
	20	10928	(00000000-)	Spring, Tors, 0.49id .05wir 05.0coil	1
	21	1018151	(00000000-)	Washer, Flat, 0.44b 0.88d .06, Nyl	1
	22	09023	(00000000-)	Screw, Hex, M8 X 1.25 X 35, Ss, Fl	1
	23	01685	(00000000-)	Washer, Flat, 0.31, Ss	2
	24	08713	(00000000-)	Nut, Hex, Lock, M8 X 1.25, Nl, Ss	1
	25	391951	(00000000-)	Harness, Seat [T7/Ssr]	1
	26	1020170	(00000000-)	Molding, Afmkt, Trim, Pvc, .08 .11, 2ft	1
	27	41141	(00000000-)	Washer, Lock, Int- Ext, 0.31	1
	28	9005082	(10611440-)	Seat Kit, Std, Replmt (Kit Includes Screw & Spacer)	1

SEAT GROUP (S/N 00000000 - 10963065)

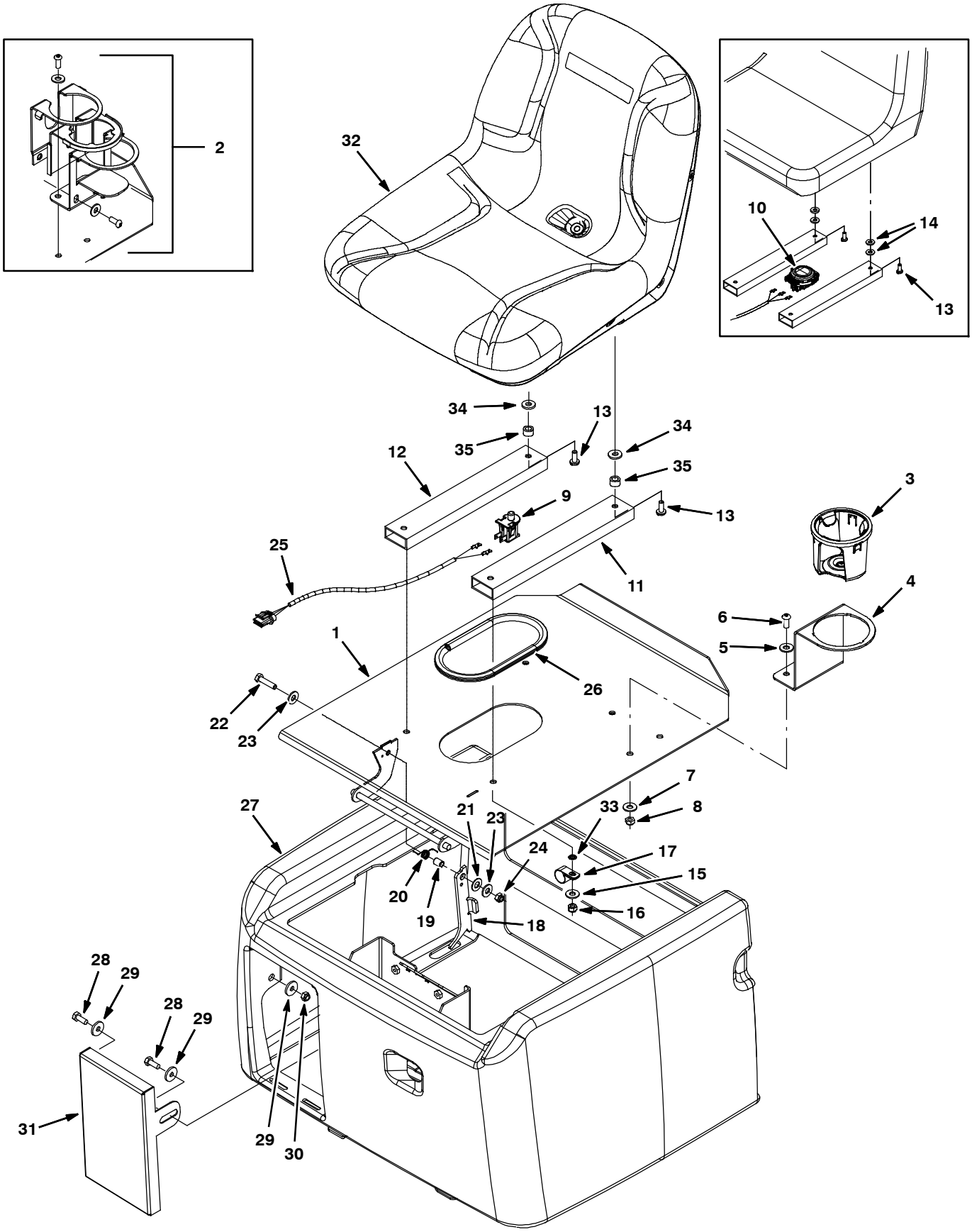

SEAT GROUP (S/N 00000000 - 10963065)

	Ref.	Part No.	Serial Number	Description	Qty.
	1	1015406	(00000000-)	Plate, Seat, W/ Label	1
	2	N/A	(00000000- 10382115)	Holder Kit, Cup, Assy [T7] (Replaced By 1038062)	1
∇		1038062	(10382116-)	Holder Kit, Cup, Assy [T7]	1
▲	3	1025867	(10382116-)	Holder, Cup, Blk [T7]	1
▲	4	1038081	(10382116-)	Holder, Cup, Brkt, Blk, [T7]	1
▲	5	1016435	(00000000-)	Washer, Flat, 0.38b 0.90d .08, Stl, Blk	2
▲	6	393135	(00000000-)	Screw, Btn, M8 X 1.25 X 20, Blk	2
▲	7	01685	(00000000-)	Washer, Flat, 0.31, Ss	2
▲	8	08713	(00000000-)	Nut, Hex, Lock, M8 X 1.25, Nl, Ss	2
	9	1048955	(10400497-)	Switch, Seat, No [Delta 6440- 04]	1
	10	223078	(00000000- 10400496)	Switch, Seat, No [Delta 6500]	1
	11	1017053	(00000000-)	Rail, Adj, Slide, Seat, 11.5l	1
	12	1017054	(00000000-)	Rail, Adj, Slide, Seat, 11.5l, W/ Latch (Replaced By 1074205)	1
	13	76956	(10611440-)	Screw, Hex, .31- 18 X 1.25, G5	4
	13	25537	(00000000- 10611439)	Screw, Pan, .31- 18 X 0.75, G2	4
	14	69461	(00000000- 10400496)	Washer, Flat, 0.38b 0.88d .12, Stl, Pl	8
	15	32491	(00000000-)	Washer, Flat, 0.31, Std	4
	16	01760	(00000000-)	Nut, Hex, Lock, .31- 18, Nl, Thin	4
	17	46236	(00000000-)	Clamp, Cable, Stl, 0.25d X 0.56w, 1h	1
	18	1016000	(00000000-)	Plate, Stop, Seat	1
	19	1017699	(00000000-)	Sleeve, P/M, 0.31b 0.44d 0.6l [430ss]	1
	20	10928	(00000000-)	Spring, Tors, 0.49id .05wir 05.0coil	1
	21	1018151	(00000000-)	Washer, Flat, 0.44b 0.88d .06, Nyl	1
	22	09023	(00000000-)	Screw, Hex, M8 X 1.25 X 35, Ss, Fl	1
	23	01685	(00000000-)	Washer, Flat, 0.31, Ss	2
	24	08713	(00000000-)	Nut, Hex, Lock, M8 X 1.25, Nl, Ss	1
	25	391951	(00000000-)	Harness, Seat [T7/Ssr]	1
	26	1020170	(00000000-)	Molding, Afmkt, Trim, Pvc, .08 .11, 2ft	1
	27	9002898	(00000000-)	Cover, Box, Battery, Trim [R14]	1
	28	09740	(00000000-)	Screw, Hex, M8 X 1.25 X 20, Ss	2
	29	1017218	(00000000-)	Washer, Flat, 0.32b 1.00d .12, Ss	3
	30	08713	(00000000-)	Nut, Hex, Lock, M8 X 1.25, Nl, Ss	1
	31	1023549	(00000000-)	Bracket, Fill [Fast Opng]	1
	32	9005082	(10611440-)	Seat Kit, Std, Replmt (Kit Includes Screw & Spacer)	1
	32	1048932	(10400497- 10611439)	Seat, Std [Michigan, Model V- 2505] (Replaced by 9005082)	1
	32	9005082	(00000000- 10400496)	Seat Kit, Std, Replmt	1
	33	41141	(00000000-)	Washer, Lock, Int- Ext, 0.31	1
	34	69461	(10400497-)	Washer, Flat, 0.38b 0.88d .12, Stl, Pl	4
	35	1051052	(10400497-)	Spacer, Rnd, .38b .88d .38l	4

STEERING GROUP

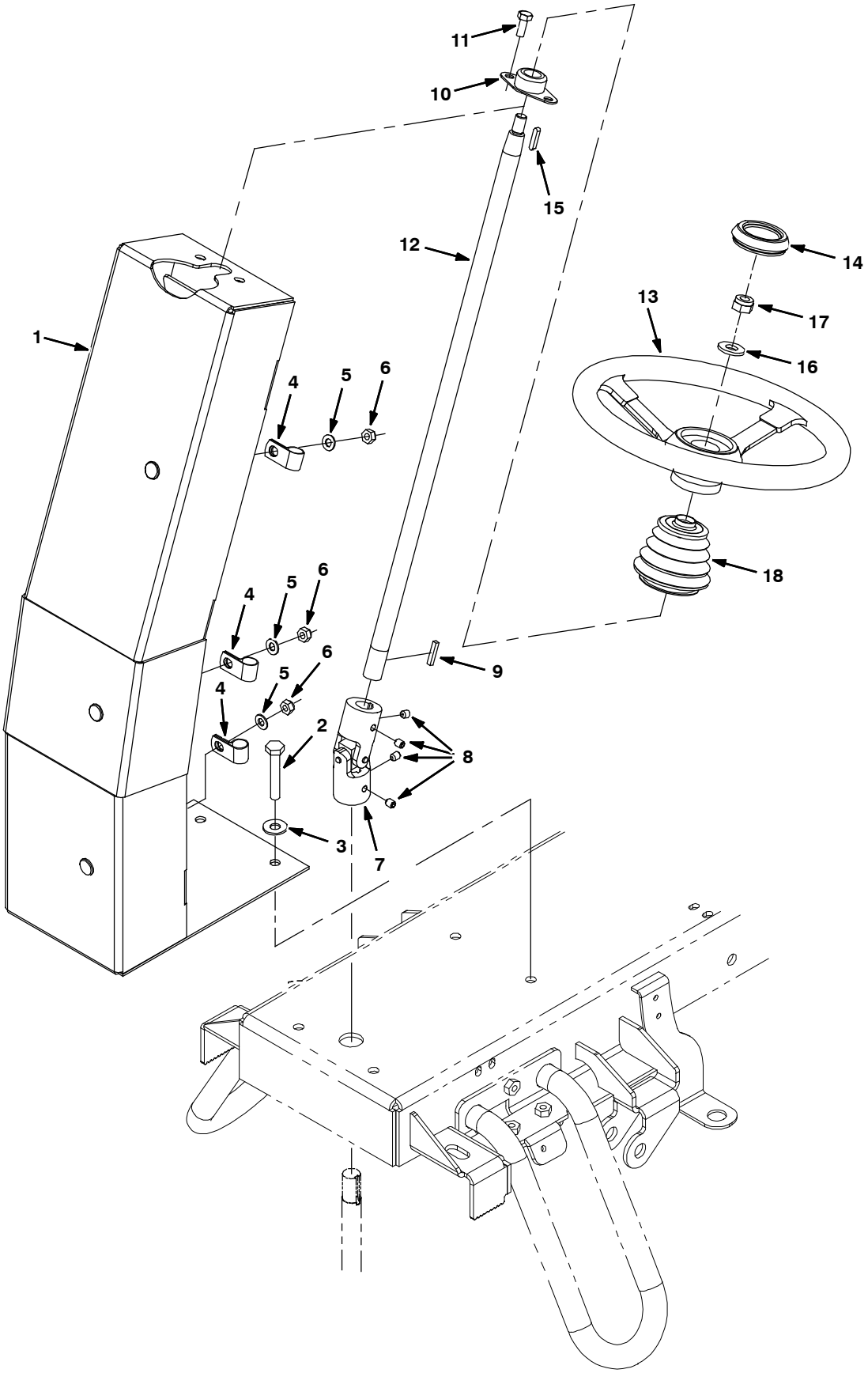

STEERING GROUP

Ref.	Part No.	Serial Number		Description	Qty.
1	1072829	(00000000-	)	Support Wldt, Steering	1
2	14529	(00000000-	)	Screw, Hex, M10 X 1.5 X 70, Ss	4
3	01686	(00000000-	)	Washer, Flat, 0.44b 1.00d .08, Ss	4
4	69234	(00000000-	)	Clamp, Cable, Stl, 1.00d X 0.75w, 1h	3
5	32490	(00000000-	)	Washer, Flat, 0.25, Std	3
6	08709	(00000000-	)	Nut, Hex, Lock, M8 X 1.25, Nl	3
7	1040295	(00000000-	)	Joint, U, 0.75id	1
8	46820	(00000000-	)	Screw, Set, .31- 18 X 0.38, Nl	4
9	00912	(00000000-	)	Key, Sq, 0.19 X 0.19, 1.00l	1
10	223065	(00000000-	)	Bearing, Flng, 2hole, 0.75b [Nyl]	1
11	09740	(00000000-	)	Screw, Hex, M8 X 1.25 X 20, Ss	2
12	1013164	(00000000-	)	Shaft, Steering, Wheel	1
13	1012002	(00000000-	)	Wheel, Steering, 300mm	1
14	1019706	(00000000-	)	Cap, Wheel, Steering	1
15	1014328	(00000000-	)	Key, Sq, 05mm X 05mm X 25mml	1
16	64154	(00000000-	)	Washer, Flat, 0.53b 1.12d .11, Stl, Pl	1
17	08711	(00000000-	)	Nut, Hex, Lock, M12 X 1.75,Nl	1
18	1012437	(00000000-	)	Bellows, Shaft, Steering	1

INSTRUMENT PANEL GROUP

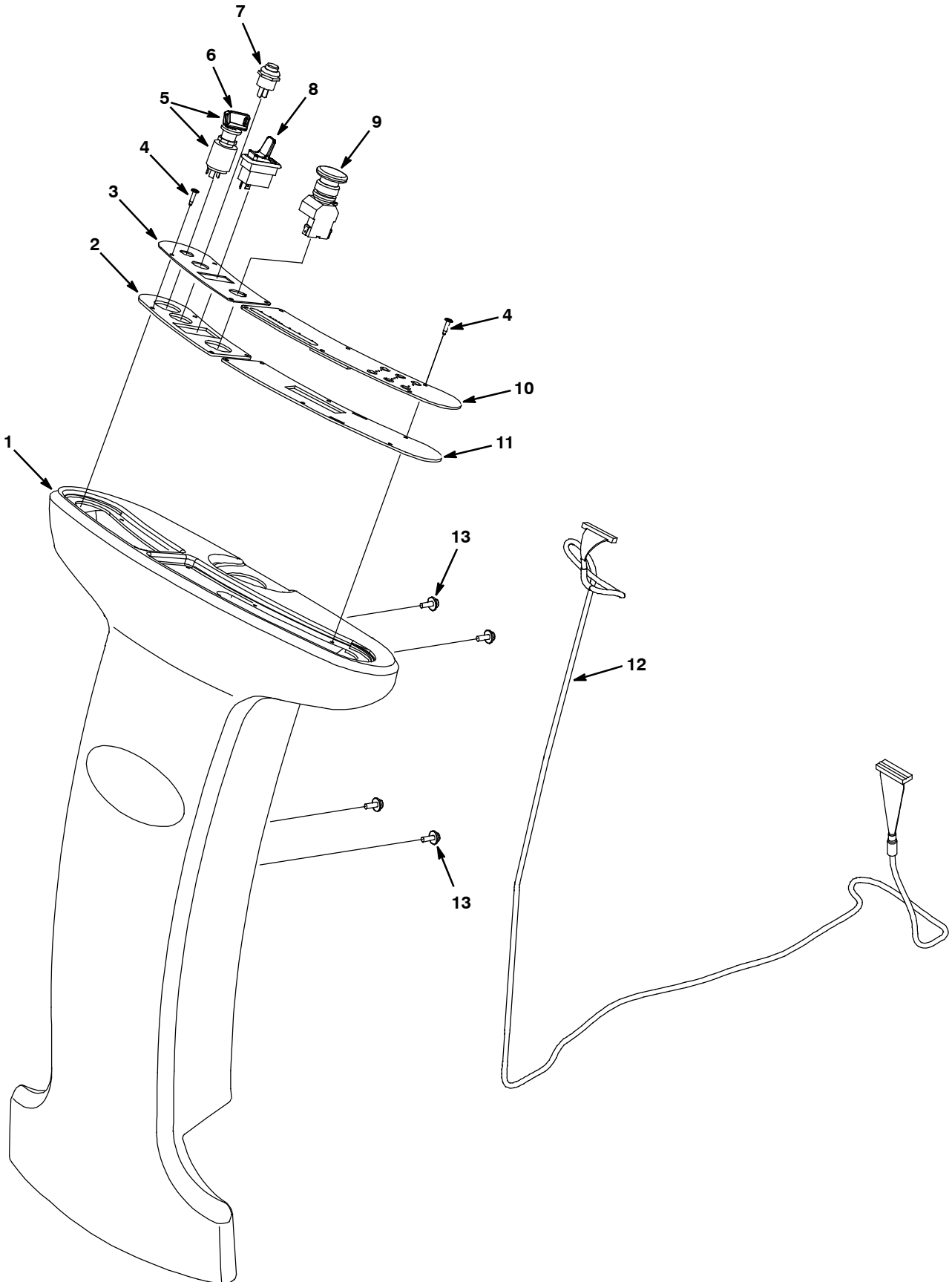

INSTRUMENT PANEL GROUP

	Ref.	Part No.	Serial Number		Description	Qty.
	1	1015415	(00000000-	)	Column, Steering, W/ Label [T7] (Teal)	1
	1	9003093	(00000000-	)	Column, Steering, W/ Label [Aramark T7] (Gray)	1
	2	1014080	(00000000-	)	Gasket, Panl, Instmt, Rh, .13, Foam, Adh	1
	3	1046313	(10403819-	)	Panel, Instmt, Rh	1
	3	9004968	(00000000- 10403818	)	Switch Kit, Key, [T7/Ssr/R14/Strv Rdr]	1
	4	72969	(00000000-	)	Rivet, Plstc, .181d X 0.720	10
∇	5	1011402	(10403819-	)	Switch, Key	1
▲	6	1017696	(10403819-	)	Key Set, Replmt [F/ Keyswitch 1011402]	1
∇	5	9004968	(00000000- 10403818	)	Switch Kit, Key, [T7/Ssr/R14/Strv Rdr]	1
▲	6	361144	(00000000- 10403818	)	Key, Ignition [Set Of 2] (For Key Switch 1016789)	1
	7	1014832	(00000000-	)	Switch, Horn	1
	8	1072040	(00000000-	)	Switch, Rocker, Spst, Paddle	1
	9	1011735	(00000000-	)	Switch, Safety, Shutoff	1
	10	1024154	(00000000-	)	Panel, Instmt, Lh [Tco]	1
	11	1013939	(00000000-	)	Gasket, Panl, Instmt, Lh, .13, Foam, Adh	1
	12	1016865	(00000000-	)	Cable, Ribbon, 90.6l	1
	13	1072628	(00000000-	)	Screw, Hex, M8 X 1.25 X 25, Ss, Sems	4

∇ ASSEMBLY

▲ INCLUDED IN ASSEMBLY

FRONT DRIVE WHEEL GROUP

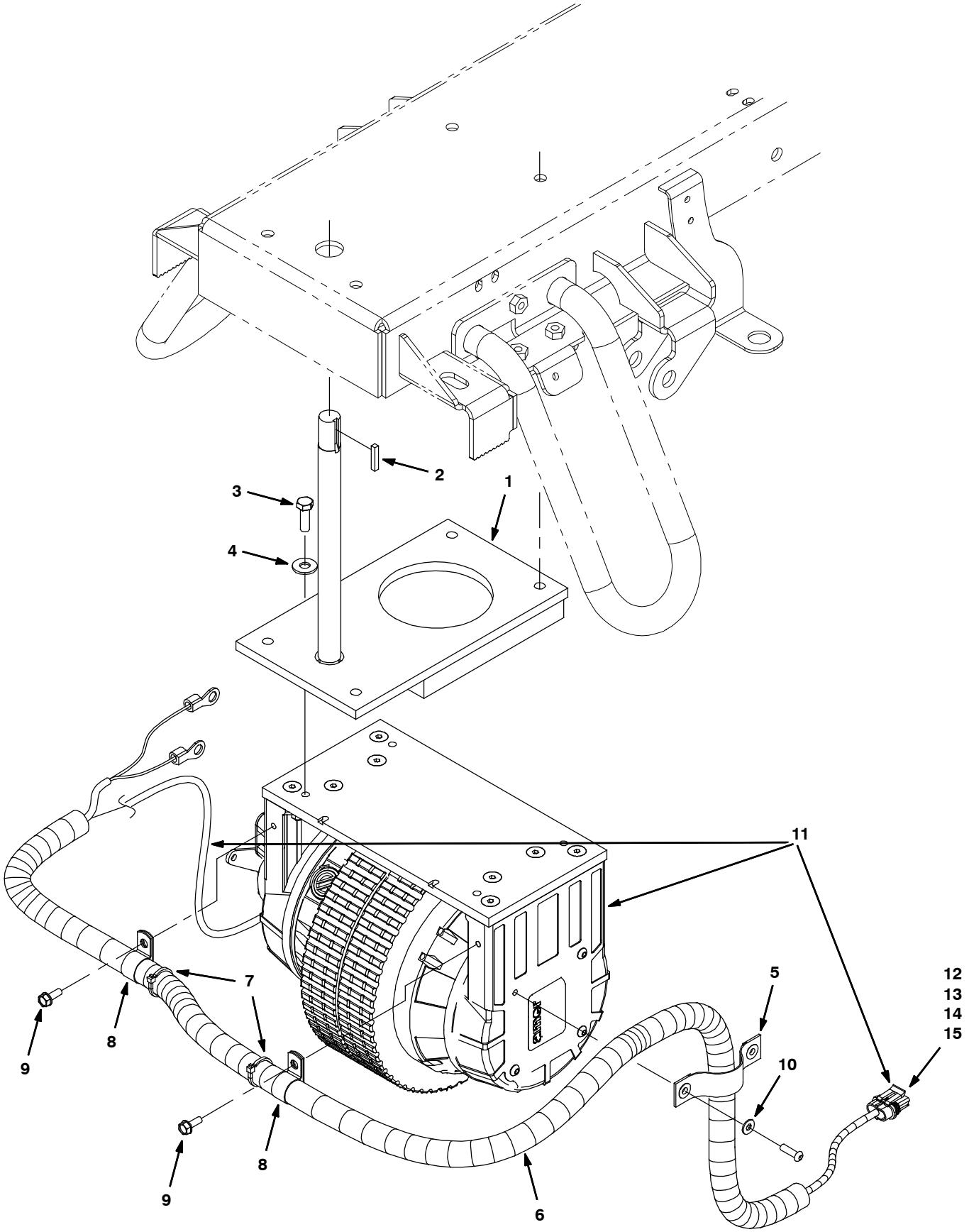

FRONT DRIVE WHEEL GROUP

	Ref.	Part No.	Serial Number		Description	Qty.
	1	1019724	(00000000-	)	Steer- Control Assy, Wheel Drive	1
	2	00912	(00000000-	)	Key, Sq, 0.19 X 0.19, 1.00l	1
	3	09740	(00000000-	)	Screw, Hex, M8 X 1.25 X 20, Ss	4
	4	01685	(00000000-	)	Washer, Flat, 0.31, Ss	4
	5	1019224	(00000000-	)	Strap, Nyl	1
	6	1015761	(00000000-	)	Sleeve, Afmkt, Nyl, #13, 03ft	1
	7	49263	(00000000-	)	Tie, Cable, Nyl, 11.4l .19w 3.0 Max D	2
	8	40678- 1	(00000000-	)	Clamp, Cable, Stl, 0.88d X 0.62w, 1hole	2
	9	361339	(00000000-	)	Screw, Hex, M6 X 1.0 X 16, Fmg	2
	10	19066	(00000000-	)	Washer, Flat, #10	2
∇	11	9003021	(00000000-	)	Gearbox Kit, Wheel, 250mm, W/Connector (See Breakdowns)	1
▲	12	78950	(00000000-	)	Connector, Fem, 2cav, Mp280 Sealed	1
▲	13	78952	(00000000-	)	Lock, Secondary, 2cav, Mp280 Sealed	1
▲	14	25837	(00000000-	)	Terminal, Fem, Mp280, Sealed, 22- 20ga	2
▲	15	25830	(00000000-	)	Seal, Wire, 14ga [Wp / Mp280 Sealed]	2

∇ ASSEMBLY

▲ INCLUDED IN ASSEMBLY

BRAKE PEDAL AND ACCELERATOR PEDAL GROUP (S/N 10644406-)

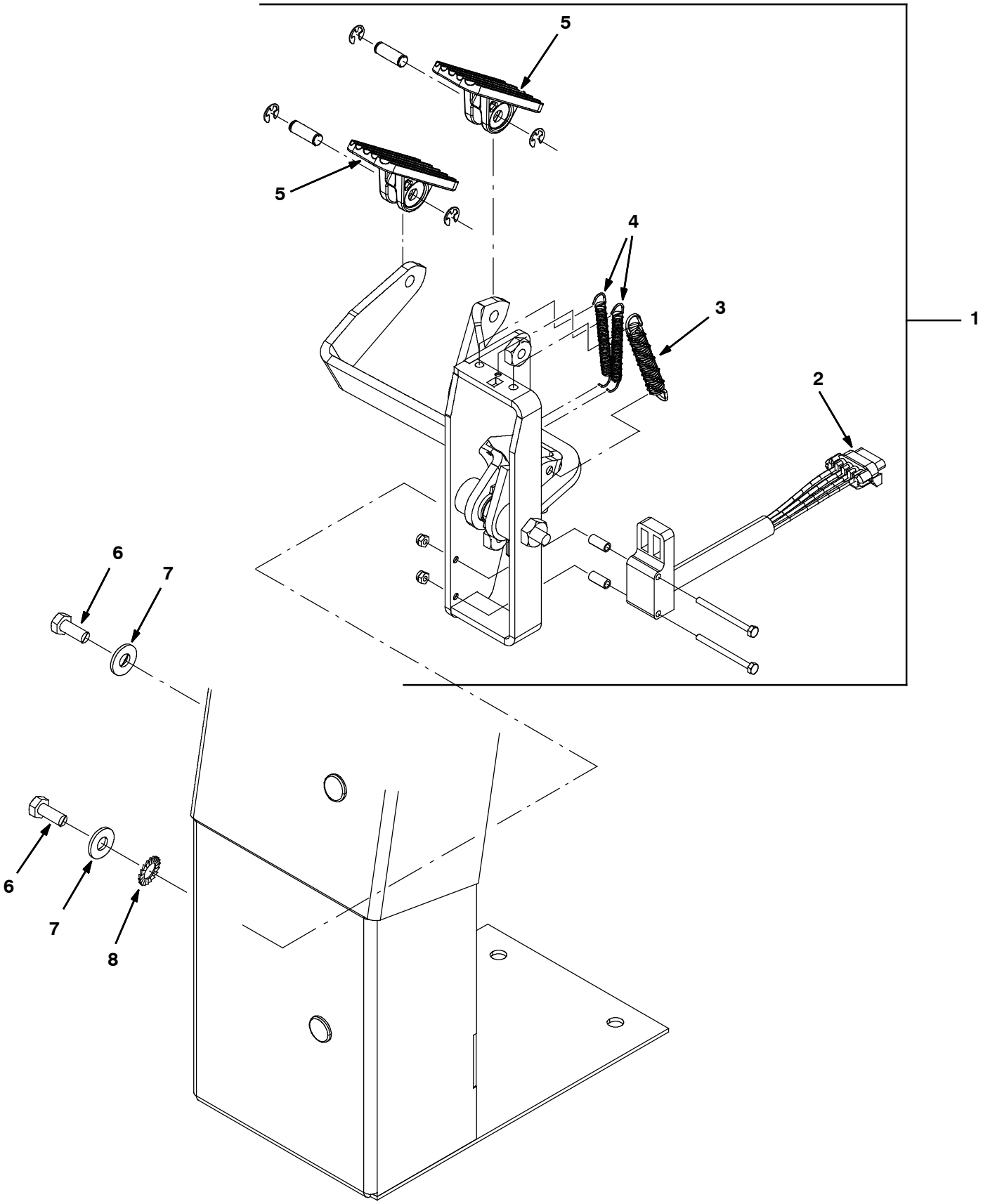

BRAKE PEDAL AND ACCELERATOR PEDAL GROUP (S/N 10644406-)

	Ref.	Part No.	Serial Number	Description	Qty.
∇	1	1072477	(10644406-)	Pedal Assy, Accelerator, Brake	1
▲	2	1058687	(10508137-)	Vr, Sensor, Position [Hall]	1
▲	3	1031716	(10508137-)	Spring, Extn, 0.50od 0.07wir 03.0l	1
▲	4	1061049	(10508137-)	Vr, Spring, Extn, 0.35od 0.05wir 02.8l	2
▲	5	1072478	(10644406-)	Vr, Pedal, Foot, W/ Tread	2
	6	09740	(00000000-)	Screw, Hex, M8 X 1.25 X 20, Ss	2
	7	01685	(00000000-)	Washer, Flat, 0.38b 0.88d .08, Ss	2
	8	41141	(00000000-)	Washer, Lock, Int- Ext, 0.31	1

∇ ASSEMBLY

▲ INCLUDED IN ASSEMBLY

BRAKE PEDAL AND ACCELERATOR PEDAL GROUP (S/N 10508137- 10644405)

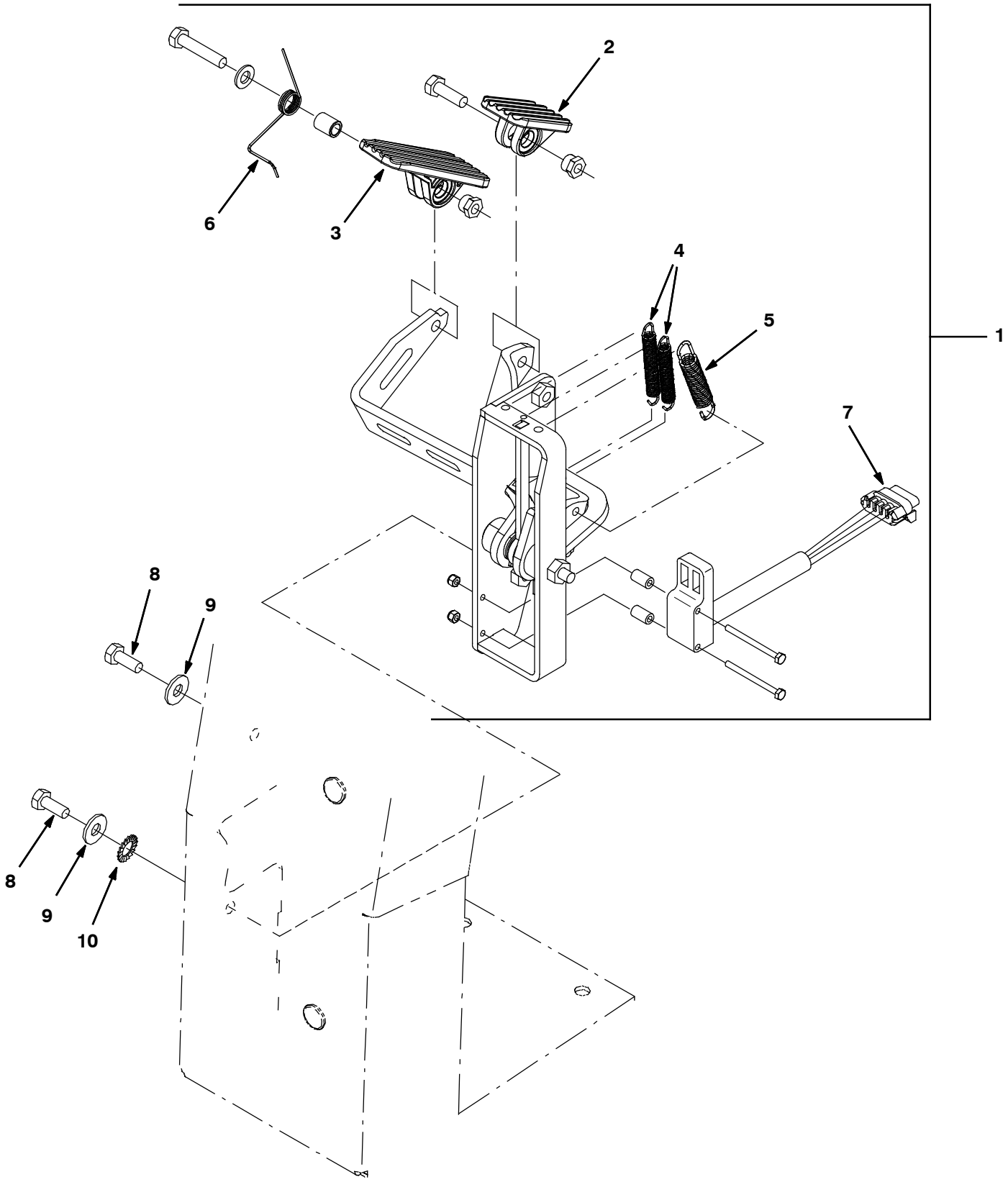

BRAKE PEDAL AND ACCELERATOR PEDAL GROUP (S/N 10508137- 10644405)

	Ref.	Part No.	Serial Number	Description	Qty.
∇	1	1051837	(10508137- 10644405)	Pedal Assy, Accelerator, Brake (Replaced By 1072477 Pedal Assy Kit)	1
▲	2	1014548	(10508137- 10644405)	Vr, Pedal, Brake, W/ Tread (Replaced By 1072477 Pedal Assy Kit)	1
▲	3	1051836	(10508137- 10644405)	Vr, Pedal, Propel, W/ Tread (Replaced By 1072477 Pedal Assy Kit)	1
▲	4	1061049	(10508137-)	Vr, Spring, Extn, 0.35od 0.05wir 02.8l	2
▲	5	1031716	(10508137-)	Spring, Extn, 0.50od 0.07wir 03.0l	1
▲	6	1064665	(10508137- 10644405)	Vr, Spring, Tors, 0.55id .05wir 04.0coil	1
▲	7	1058687	(10508137-)	Vr, Sensor, Position [Hall]	1
	8	09740	(00000000-)	Screw, Hex, M8 X 1.25 X 20, Ss	2
	9	01685	(00000000-)	Washer, Flat, 0.38b 0.88d .08, Ss	2
	10	41141	(00000000-)	Washer, Lock, Int- Ext, 0.31	1

∇ ASSEMBLY

▲ INCLUDED IN ASSEMBLY

BRAKE PEDAL AND ACCELERATOR PEDAL GROUP (S/N 00000000- 10508136)

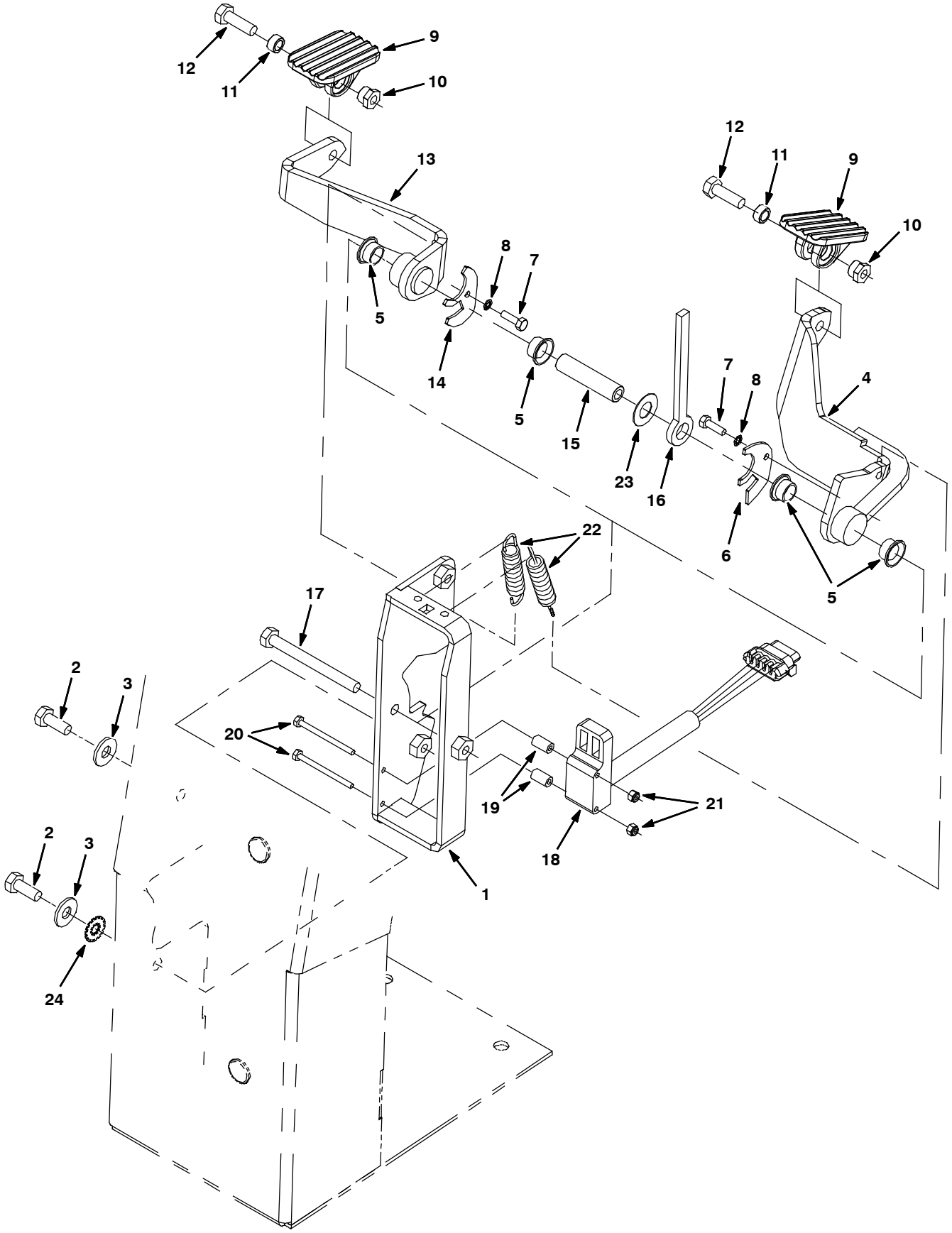

BRAKE PEDAL AND ACCELERATOR PEDAL GROUP (S/N 00000000- 10508136)

Ref.	Part No.	Serial Number	Description	Qty.
1	1011970	(00000000- 10508136)	Frame Wldt, Pedal (Replaced By 1051837)	1
2	09740	(00000000-)	Screw, Hex, M8 X 1.25 X 20, Ss	2
3	01685	(00000000-)	Washer, Flat, 0.31, Ss	2
4	1019766	(00000000-)	Arm Wldt, Brake	1
5	15648	(00000000-)	Bushing, Flng, 0.50b 0.59d 0.38l	4
6	1011955	(00000000-)	Plate, Brake	1
7	24199	(00000000-)	Screw, Hex, M5 X 0.8 X 16, Ss	2
8	07514	(00000000- 10508136)	Washer, Lock, Int, #10, Ss	2
9	1014548	(00000000- 10508136)	Pedal, Rest, Foot	2
10	1014582	(00000000-)	Nut, T, M8 X 1.25 X 11.90od X 6.2l	2
11	1014668	(00000000- 10508136)	Bushing, Sleeve, 8mmb 12mmd 6mml	2
12	09010	(00000000-)	Screw, Hex, M8 X 1.25 X 25, Ss	2
13	1013898	(00000000- 10508136)	Arm Wldt, Accelerator	1
14	1011951	(00000000-)	Plate, Accelerator	1
15	1011865	(00000000-)	Pivot, Tube	1
16	1011880	(00000000-)	Bearing, Thrust	1
17	06958	(00000000-)	Screw, Hex, M8 X 1.25 X 80, 8.8	1
18	1011562	(00000000- 10508136)	Sensor, Position [Hall] (Replaced By 1058687)	1
19	1011957	(00000000-)	Tube, Rnd, 0.32d 0.17b 00.6l, Ss, P/M	2
20	32509	(00000000-)	Screw, Hex, M4 X 0.7 X 50, Ss	2
21	33932	(00000000-)	Nut, Hex, Lock, M4 X 0.70, Nl, Ss	2
22	1031716	(00000000- 10508136)	Spring, Extn, 0.50od X 0.07wir, 3.0l	2
23	20536- 2	(00000000- 10508136)	Washer, Flat, 0.47b 1.19d .03, Nyl	1
24	41141	(00000000-)	Washer, Lock, Int- Ext, 0.31	1

RECOVERY TANK GROUP

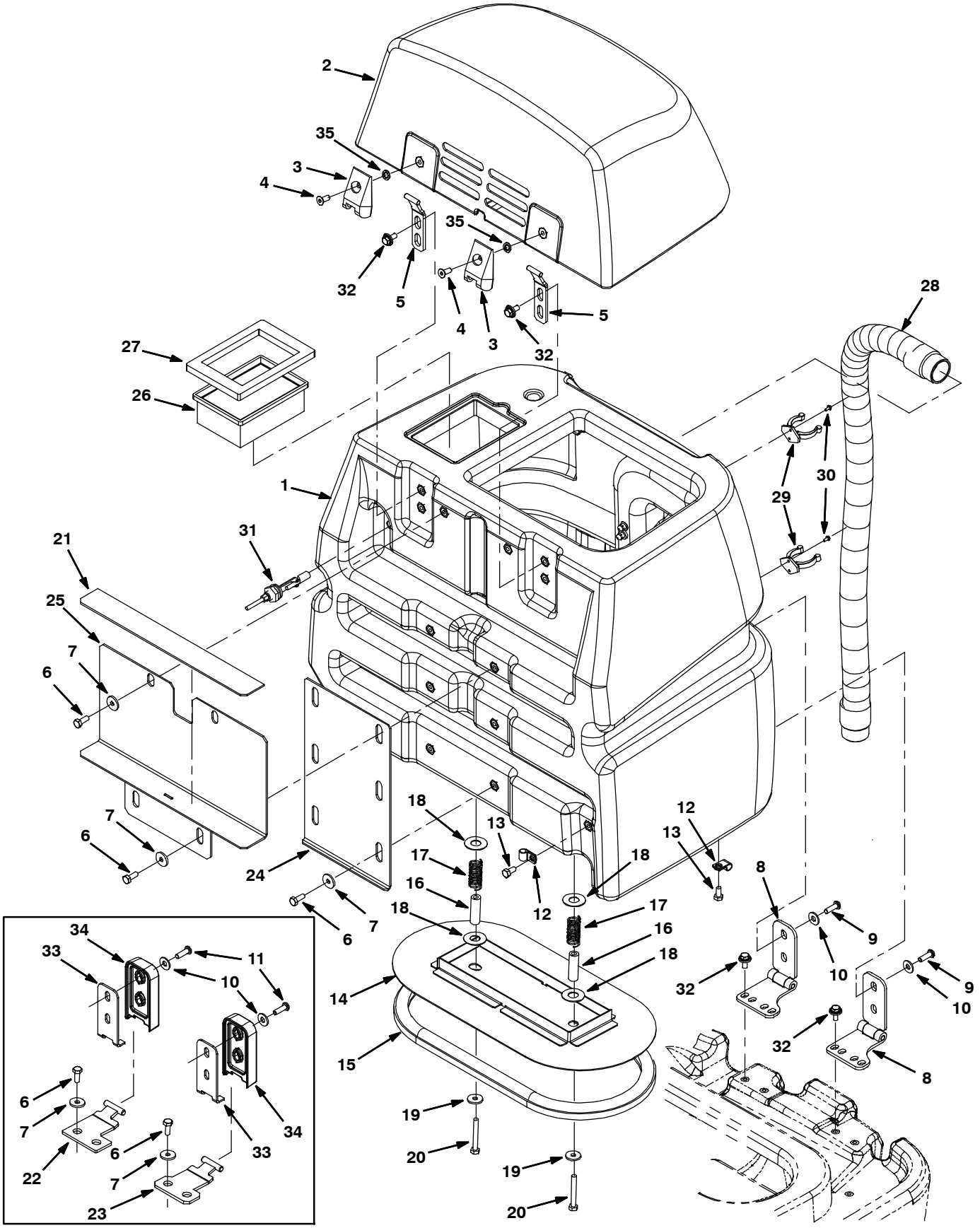

RECOVERY TANK GROUP

Ref.	Part No.	Serial Number	Description	Qty.
1	9002903	(00000000-)	Tank, Recvy, W/ Label, Afmkt [R14] (Teal)	1
1	9003092	(00000000-)	Tank, Recvy, W/ Label, Afmkt [R14 Aramark] (Gray)	1
2	9002908	(00000000-)	Cover, Tank, Recvy, Afmkt [R14]	1
3	1050554	(00000000-)	Hinge, Leaf [T7, 5680/5700]	2
4	222463	(00000000-)	Screw, Flt, M8 X 1.25 X 20, Blk	2
5	1012055	(00000000-)	Hinge Wldt, Cover	2
6	09740	(00000000-)	Screw, Hex, M8 X 1.25 X 20, Ss	8
7	1017218	(00000000-)	Washer, Flat, 0.32b 1.00d .12, Ss	8
8	1018304	(10346364-)	Hinge, 10mm Pin, Crs, Blk [T7]	2
9	223470	(10346364-)	Screw, Btn, M8 X 1.25 X 25, Ss	4
10	1016435	(00000000-)	Washer, Flat, 0.38b 0.90d .08, Stl, Blk	4
11	1016430	(00000000- 10346363)	Screw, Btn, M8 X 1.25 X 25, 10.9, Blk	4
12	82829	(00000000-)	Clamp, Cable, Stl, 0.63d X 0.75w, 1h	4
13	15675	(00000000-)	Screw, Hex, M8 X 1.25 X 16, Ss	4
14	1016855	(00000000-)	Plate Wldt, Seal, Tank	1
15	1020301	(00000000-)	Seal, Afmkt, Bulb, Clsd Cell, Adh, 08ft	1
16	1016871	(00000000-)	Tube, Pvc, 0.63d 0.35b 02.0l	2
17	397255	(00000000-)	Spring, Cmpr, 0.9od .080wir 02.0l	2
18	605385	(00000000-)	Washer, Flat, 0.69b 1.50d .05, Ss	4
19	1017218	(00000000-)	Washer, Flat, 0.32b 1.00d .12, Ss	2
20	1014163	(00000000-)	Screw, Hex, M8 X 1.25 X 60, Fl, Ss	2
21	1017705	(00000000-)	Pad, Rbr	1
22	1011752	(00000000- 10346363)	Hinge Wldt, Tank	1
23	1011753	(00000000- 10346363)	Hinge Wldt, Tank	1
24	1017670	(00000000-)	Angle, Sppt, Tank	1
25	1025647	(00000000-)	Bracket Wldt, Tank, Sppt	1
26	1037821	(00000000-)	Filter, Panl, Dust, 2.3 X 04.5 X 06.4	1
27	1016392	(00000000-)	Gasket, 05.31 X 03.74 X .50, Ure, Adh	1
28	1025587	(00000000-)	Hose, Vacuum, 1.5d X 32l, 2- Short Cuff	1
29	1001992	(00000000-)	Clip, Grip, Hose, 1.75id, Blk Ny	2
30	607006	(00000000-)	Screw, Trs, M4 X 0.70 X 12, Phl, Pl	4
31	385685	(00000000-)	Sensor, Level, Liq, 14vdc 01a .62- 11	1
32	1020341	(00000000-)	Screw, Hex, M8 X 1.25 X 20, Ss, Sems	8
33	1017590	(00000000- 10346363)	Plate, Hinge	2
34	1011536	(00000000- 10346363)	Hinge, Tank	2
35	32984	(00000000-)	Washer, Lock, Int, 0.31	2

VACUUM FAN GROUP

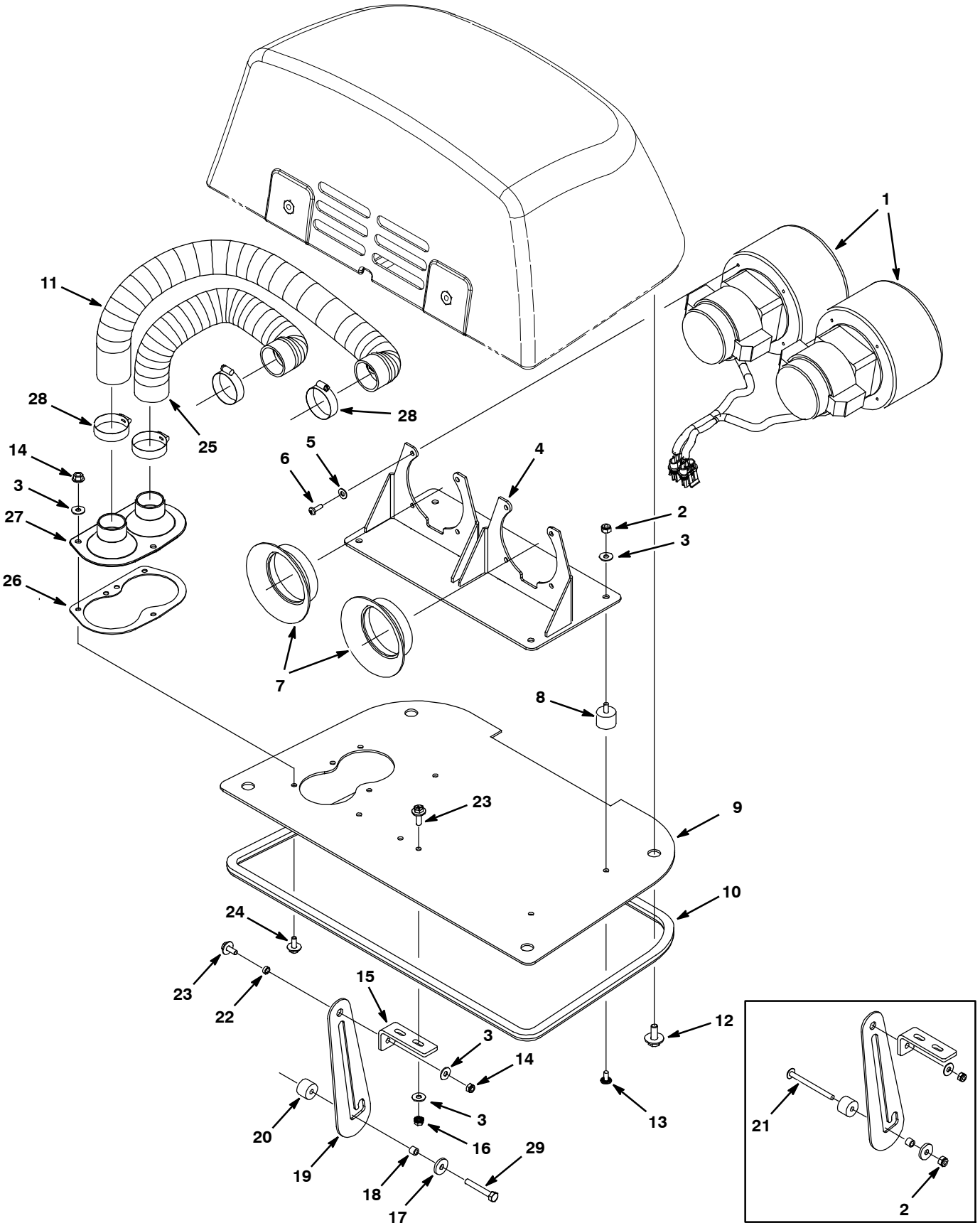

VACUUM FAN GROUP

	Ref.	Part No.	Serial Number	Description	Qty.
∇	1	1039763	(00000000-)	Fan, Vacuum, 5.7d, 024vdc, 3 Stage [Bpp]	2
▲	1	372883	(00000000-)	Vr, Brush Kit, Motor, Ele	2
▲	1	398511	(00000000-)	Vr, Housing	2
	2	41169	(10764501-)	Nut, Hex, Lock, .25- 20, Nl, Ss	4
	2	41169	(00000000- 10764500)	Nut, Hex, Lock, .25- 20, Nl, Ss	5
	3	01684	(00000000-)	Washer, Flat, 0.25, Ss	11
	4	1024100	(00000000-)	Bracket Wldt, Mtg, Fan	1
	5	19066	(00000000-)	Washer, Flat, #10	8
	6	1015506	(00000000-)	Screw, Pan, M5 X 16	8
	7	1011140	(00000000-)	Seal, Fan	2
	8	1000409	(00000000-)	Mount, Stud / Plate	4
	9	1027532	(00000000-)	Plate, Wldt, Fan	1
	10	9002910	(00000000-)	Seal, Bulb, Str, 0.5h 0.5w 2.014m, Afmkt	1
	11	1024230	(00000000-)	Hose, Vacuum, Wir, 1.50id X 024.0l, Clr	1
	12	1020341	(00000000-)	Screw, Hex, M8 X 1.25 X 20, Ss, Sems	4
	13	140195	(00000000-)	Screw, Trs, .25- 20 X 0.50, Phl, Ss, Sems	4
	14	07790	(00000000-)	Nut, Hex, Flng, M6 X 1.00	4
	15	1026322	(00000000-)	Bracket, Mtg, Stop	1
	16	1007108	(00000000-)	Nut, Hex, Lock, M6 X 1.00, Kep, Ext	2
	17	140053	(00000000-)	Washer, Flat, 0.28b 0.88d .12, Ss	1
	18	140154	(00000000-)	Sleeve, P/M, 0.25b 0.38d 0.3l, Pl	1
	19	1026270	(00000000-)	Bracket, Arm, Prop	1
	20	578579	(00000000-)	Spacer, 0.25b 0.88d 0.50l	1
	21	1026986	(00000000- 10764500)	Screw, Trs, .25- 20 X 3.00, Phl, Ss	1
	22	80491	(00000000-)	Sleeve, P/M, 0.25b 0.38d 0.2l [430ss]	1
	23	1034731	(00000000-)	Screw, Hex, M6 X 1.00 X 16, Ss, Sems	3
	24	1034731	(00000000-)	Screw, Hex, M6 X 1.00 X 16, Ss, Sems	3
	25	1024233	(00000000-)	Hose, Vacuum, Wir, 1.50id X 012.3l, Clr	1
	26	1025538	(00000000-)	Gasket, Adapter	1
	27	1024787	(00000000-)	Adapter, Hose	1
	28	79381	(00000000-)	Clamp, Hose, Wormdrive, 1.25- 2.00d, .50w	4
	29	06946	(10764501-)	Screw, Hex, M6 X 1.00 X 35, 8.8	1

∇ ASSEMBLY

▲ INCLUDED IN ASSEMBLY

SOLUTION TANK GROUP

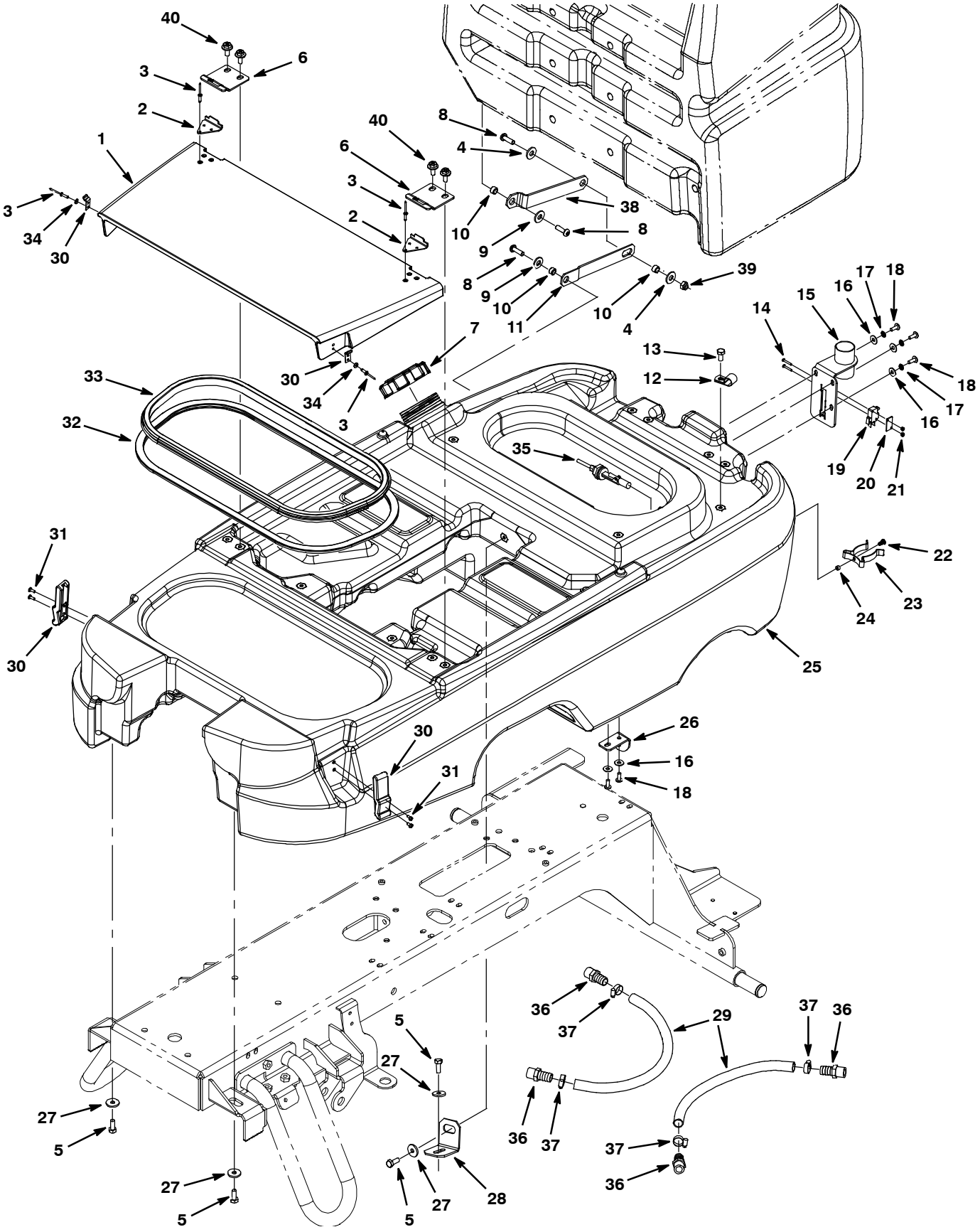

SOLUTION TANK GROUP

Ref.	Part No.	Serial Number		Description	Qty.
1	1012505	(00000000-	)	Cover, Tank, Soltn	1
2	1020292	(00000000-	)	Plate, Cover, Tab	2
3	1021677	(00000000-	)	Rivet, Blind, .154d X 0.55 X .38d, Ss	10
4	01685	(00000000-	)	Washer, Flat, 0.31, Ss	2
5	09740	(00000000-	)	Screw, Hex, M8 X 1.25 X 20, Ss	4
6	1020317	(00000000-	)	Catch, Cover	1
7	1011885	(00000000-	)	Cap, Tank	4
8	223470	(00000000-	)	Screw, Btn, M8 X 1.25 X 25, Ss	4
9	1016435	(00000000-	)	Washer, Flat, 0.38b 0.90d .08, Stl, Blk	2
10	222516	(00000000-	)	Sleeve, P/M, 0.31b 0.50d 0.3l [430ss]	3
11	1011852	(00000000-	)	Arm, Tank, Retaining	1
12	82829	(00000000-	)	Clamp, Cable, Stl, 0.63d X 0.75w, 1hole	2
13	15675	(00000000-	)	Screw, Hex, M8 X 1.25 X 16, Ss	2
14	06922	(00000000-	)	Screw, Pan, M3 X 0.50 X 20, 4.8	2
15	1024246	(00000000-	)	Bracket, Hose, Vacuum	1
16	01684	(00000000-	)	Washer, Flat, 0.25, Ss	5
17	07515	(00000000-	)	Washer, Lock, Int, 0.25, Ss	3
18	608322	(00000000-	)	Screw, Trs, M6 X 1.00 X 16, Phl, Ss	5
19	9002907	(00000000-	)	Switch Kit, Afmkt [Gator]	1
20	601359	(00000000-	)	Plate, Backing, Switch	1
21	579211	(00000000-	)	Nut, Hex, Lock, M3 X 0.50, Ss	2
22	140287	(00000000-	)	Screw, Pan, M4 X 0.7 X 16, Phl, Ss	1
23	1030368	(00000000-	)	Clip, Adj, Tool Clip, 1 To 1.78 Dia.	1
24	630452	(00000000-	)	Spacer, Plstc, 4.3b 8.0d 5.0l, Ny Blk	1
25	9002905	(00000000-	)	Tank, Soltn W/ Label, Afmkt [R14]	1
26	1027562	(00000000-	)	Bracket, Hose, Qdc	1
27	1017218	(00000000-	)	Washer, Flat, 0.32b 1.00d .12, Ss	4
28	1014072	(00000000-	)	Bracket, Mtg, Tank	1
29	9002919	(00000000-	)	Hose, Pvc, Clr, 0.62id 0.88od, 36l	1
30	49800	(00000000-	)	Latch	2
31	607006	(00000000-	)	Screw, Trs, M4 X 0.70 X 12, Phl, Pl	4
32	1020727	(00000000-	)	Seal, Afmkt, Bulb, Clsd Cell, Adh, 08ft	2
33	1020719	(00000000-	)	Seal, Afmkt, Bulb, Clsd Cell, Adh, 08ft	5
34	140026	(00000000-	)	Washer, Flat, #06, Sae Pl	4
35	385685	(00000000-	)	Sensor, Level, Liq, 14vdc 01a .62- 11	1
36	41440	(00000000-	)	Fitting, Plstc, Str, Bm10/Pm08	4
37	54333	(00000000-	)	Clamp, Hose, Wormdrive, 0.31- 0.88d, .31w	4
38	1011853	(00000000-	)	Arm, Tank, Retaining	1
39	08713	(00000000-	)	Nut, Hex, Lock, M8 X 1.25, Nl, Ss	1
40	1020341	(00000000-	)	Screw, Hex, M8 X 1.25 X 20, Ss, Sems	4

TANKS DRAIN GROUP

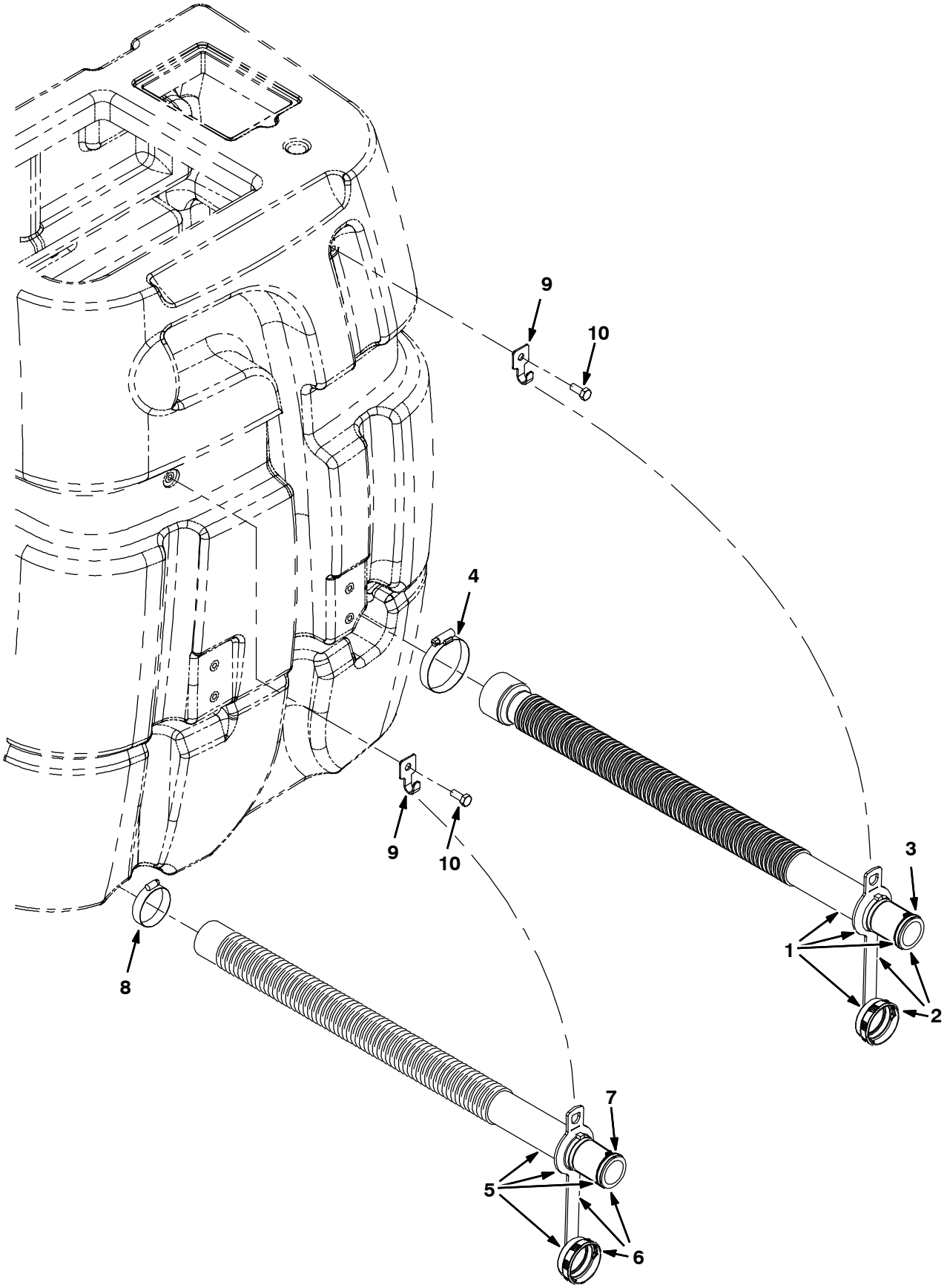

TANKS DRAIN GROUP

	Ref.	Part No.	Serial Number		Description	Qty.
∇	1	1014274	(00000000-	)	Hose Assy, Drain, 1.50id X 27.8l, Blk (Recovery Tank)	1
▲∇	2	1008639	(00000000-	)	Cap, Drain Assy	1
▲▲	3	1008637	(00000000-	)	Seal, Org, 1.48id 1.76od	1
	4	14432	(00000000-	)	Clamp, Hose, Wormdrive, 1.81- 2.75d, .50w	1
∇	5	1014268	(00000000-	)	Hose Assy, Drain, 1.50id X 27.0l, Blk (Solution Tank)	1
▲∇	6	1008639	(00000000-	)	Cap, Drain Assy	1
▲▲	7	1008637	(00000000-	)	Seal, Org, 1.48id 1.76od	1
	8	11531	(00000000-	)	Clamp, Hose, Wormdrive, 1.06- 2.00d, .56w	1
	9	222793	(00000000-	)	Clip, Hanger, Hose, .38d Hole, Ss	2
	10	15675	(00000000-	)	Screw, Hex, M8 X 1.25 X 16, Ss	2

∇ ASSEMBLY

▲ INCLUDED IN ASSEMBLY

CIRCUIT BOARD GROUP

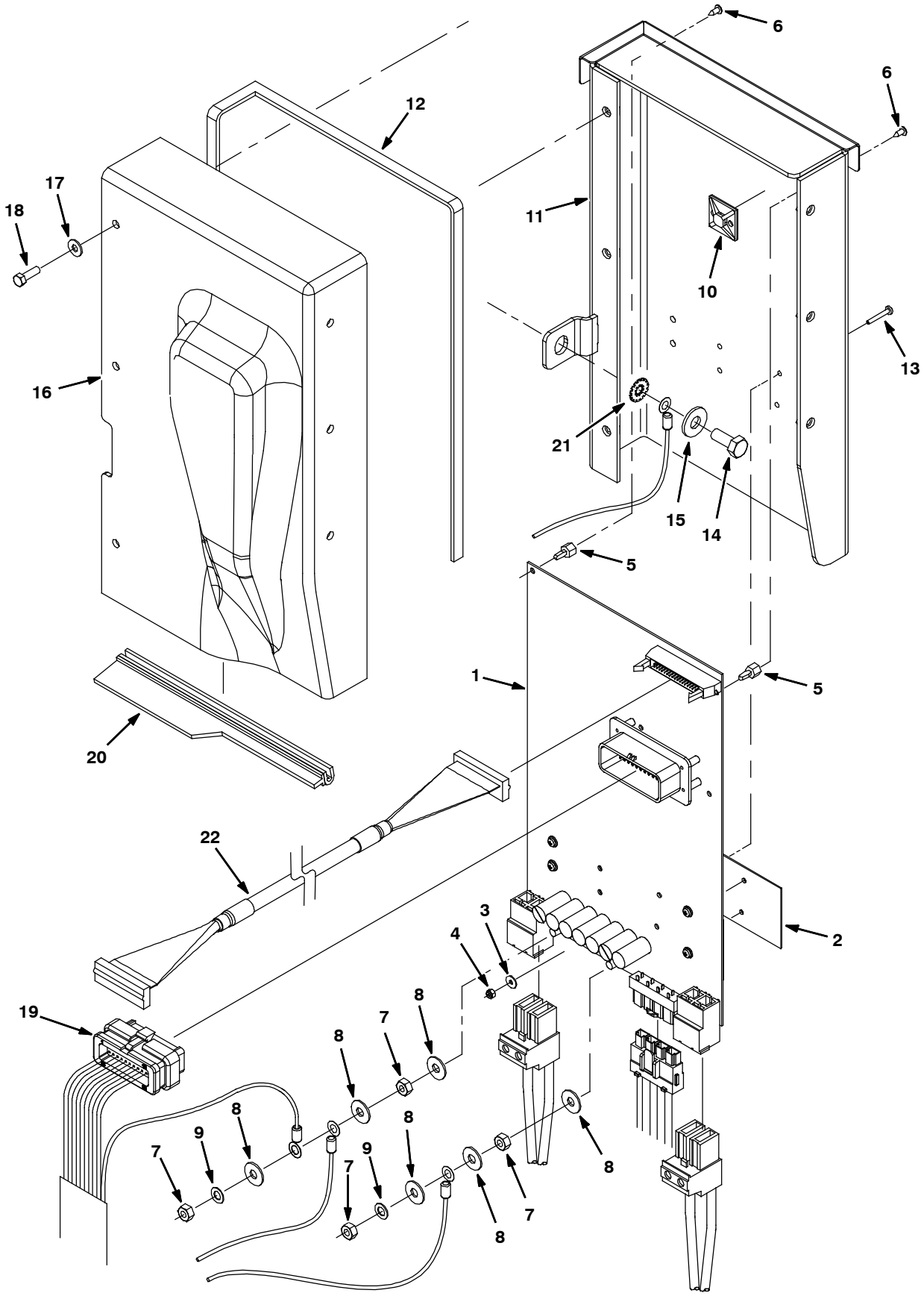

CIRCUIT BOARD GROUP

	Ref.	Part No.	Serial Number		Description	Qty.
∇	1	9012714	(00000000-	)	Controller Kit, Replmt, Ci [R14]	1
▲		27964	(00000000-	)	Strap, Static Ground, Disposable	1
▲	2	1016816	(00000000-	)	Pad, Thermal, Heat Sink	1
▲	3	1019218	(00000000-	)	Washer, Flat, 0.14b 0.31d .03, Nyl	4
▲	4	579211	(00000000-	)	Nut, Hex, Lock, M3 X 0.50, Ss	4
▲	5	1016825	(00000000-	)	Support, Circuitboard	2
▲	6	3701.6	(00000000-	)	Screw, Pan, #06- 32 X 0.38, Phl Ss Shtmtl	2
▲	7	07785	(00000000-	)	Nut, Hex, Std, M6 X 1.00, A2, Ss	4
▲	8	01684	(00000000-	)	Washer, Flat, 0.25, Ss	6
▲	9	32982	(00000000-	)	Washer, Lock, Int, 0.25	2
▲	10	55248	(00000000-	)	Mount, Cable Tie	1
▲	11	1017754	(00000000-	)	Panel Wldt, Cntrl	1
▲	12	1017880	(00000000-	)	Seal, Strip, Adh	1
▲	13	06922	(00000000-	)	Screw, Pan, M3 X 0.50 X 20, 4.8	4
	14	09740	(00000000-	)	Screw, Hex, M8 X 1.25 X 20, Ss	1
	15	01685	(00000000-	)	Washer, Flat, 0.31, Ss	1
	16	1017812	(00000000-	)	Cover, Panl, Ele	1
	17	76426	(00000000-	)	Washer, Sealing, 0.28b 0.75d Ss, Neo	6
	18	24199	(00000000-	)	Screw, Hex, M5 X 0.8 X 16, Ss	6
	19	1044984	(00000000-	)	Harness, Main [R14]	1
	20	1019083	(00000000-	)	Seal, Cut	1
	21	41141	(00000000-	)	Washer, Lock, Int- Ext, 0.31	1
	22	1016865	(00000000-	)	Cable, Ribbon, 90.6l	1

∇ ASSEMBLY

▲ INCLUDED IN ASSEMBLY

ELECTRICAL GROUP

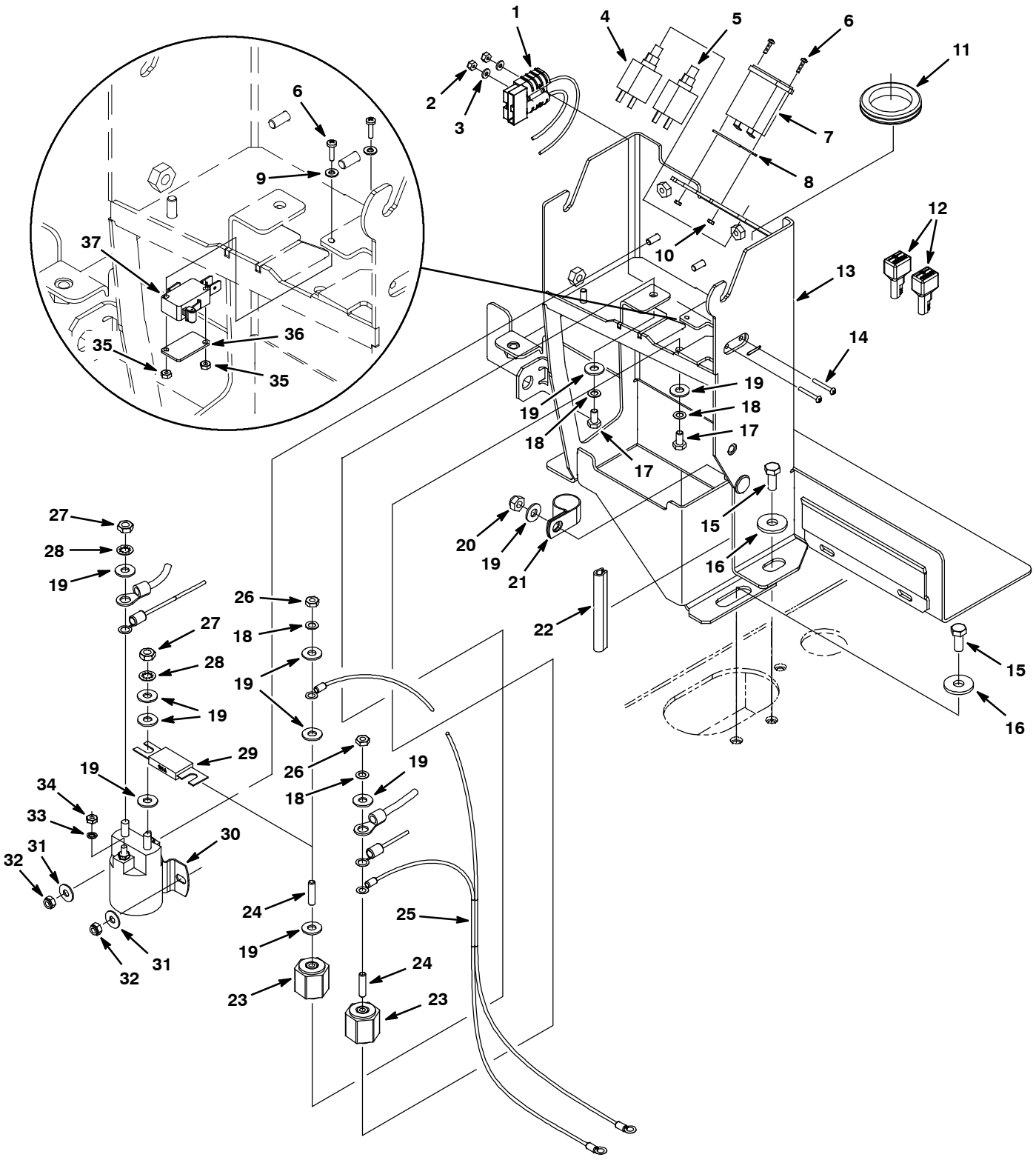

ELECTRICAL GROUP

Ref.	Part No.	Serial Number		Description	Qty.
1	391915	(00000000-	)	Harness, Chrgr [T7]	1
2	75939	(00000000-	)	Nut, Hex, Lock, #06- 32, Nl	2
3	19064	(00000000-	)	Washer, Flat, #06	2
4	383722	(00000000-	)	Circuitbreaker, 15.0a	1
5	383720	(00000000-	)	Circuitbreaker, 05.0a	1
6	09146	(00000000-	)	Screw, Pan, M3 X 0.50 X 12, 4.8	4
7	377433	(00000000-	)	Gauge, Hourmeter, 12- 60vdc, Analog [10k]	1
8	222683	(00000000-	)	Gasket, Hourmeter	1
9	1035394	(00000000-	)	Washer, Flat, 0.17b 0.38d .04, Ss	2
10	579211	(00000000-	)	Nut, Hex, Lock, M3 X 0.50, Ss	2
11	54345	(00000000-	)	Grommet, Rbr, 1.62id, F/1.9h, .13 Matl	1
12	222290	(00000000-	)	Diode, Ele, Plug	2
13	1021531	(00000000-	)	Support Wldt, Actuator	1
14	25005	(00000000-	)	Screw, Pan, #06- 32 X 1.00, G1	2
15	09740	(00000000-	)	Screw, Hex, M8 X 1.25 X 20, Ss	5
16	1017218	(00000000-	)	Washer, Flat, 0.32b 1.00d .12, Ss	5
17	58670	(00000000-	)	Screw, Hex, .25- 20 X 0.50, Nl	2
18	32982	(00000000-	)	Washer, Lock, Int, 0.25	4
19	32490	(00000000-	)	Washer, Flat, 0.25, Std	11
20	08713	(00000000-	)	Nut, Hex, Lock, M8 X 1.25, Nl, Ss	1
21	69234	(00000000-	)	Clamp, Cable, Stl, 1.00d X 0.75w, 1hole	1
22	1020168	(00000000-	)	Molding, Afmkt, Trim, Pvc, .08 .11, 01ft	1
23	76062	(00000000-	)	Stand- Off, Wir, M6, Insulator, Panel	2
24	1017807	(00000000-	)	Rod, Thrd, Full, .25- 20 01.0l	2
25	391916	(00000000-	)	Harness, Power [T7]	1
26	32520	(00000000-	)	Nut, Hex, Jam, .25- 20	2
27	20170	(00000000-	)	Nut, Hex, Jam, .31- 24	2
28	32984	(00000000-	)	Washer, Lock, Int, 0.31	2
29	86379	(00000000-	)	Fuse, 100a 125volt 0.88 X 3.2l	1
30	02424	(00000000-	)	Relay, 24vdc, 100a, No [White]	1
31	01684	(00000000-	)	Washer, Flat, 0.25, Ss	2
32	08712	(00000000-	)	Nut, Hex, Lock, M6 X 1.00, Ss, Nl	2
33	07514	(00000000-	)	Washer, Lock, Int, #10, Ss	2
34	01689	(00000000-	)	Nut, Hex, Std, #10- 32, Ss	2
35	579211	(00000000-	)	Nut, Hex, Lock, M3 X 0.50, Ss	2
36	601359	(00000000-	)	Plate, Backing, Switch	1
37	600437	(00000000-	)	Switch, Snap, 16a, Rlr	1

VACUUM FLOOR TOOL GROUP

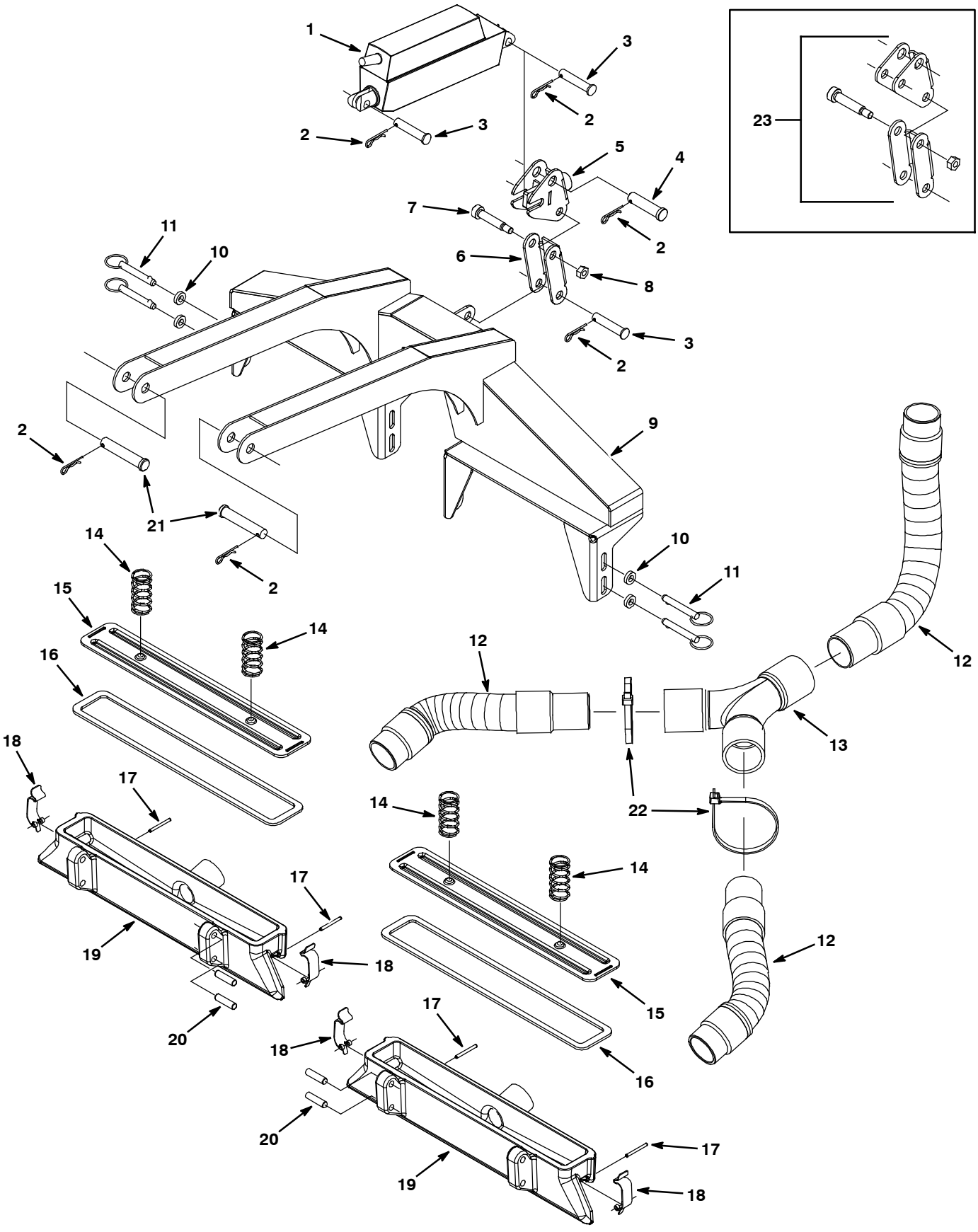

VACUUM FLOOR TOOL GROUP

	Ref.	Part No.	Serial Number	Description	Qty.
	1	1009268	(00000000-)	Actuator, 12vdc, 40mm Strk [750n]	1
	2	86866	(00000000-)	Pin, Cotter, Hair, 0.38d .072 Wir	6
	3	94877	(00000000-)	Pin, Clevis, 10mmd X 050mml	3
	4	51534	(00000000-)	Pin, Clevis, 0.50d X 2.00l	1
∇	5	1043939	(10419189-)	Link Assy, Bellcrank, W/ Spring Relief	1
▲	6	1043604	(10419189-)	Link, Floor Tool	1
▲	7	1030114	(00000000-)	Screw, Shld, 10mmd X 40mml	1
▲	8	08713	(00000000-)	Nut, Hex, Lock, M8 X 1.25, Nl, Ss	1
	9	1023886	(00000000-)	Wldt, Frame, Split Lopro Floor Tool	1
	10	230363	(00000000-)	Spacer, 0.33b 0.62d 0.16l, Pl	4
	11	1015989	(00000000-)	Pin, Hitch, .312d X 2.00l	4
	12	1026472	(00000000-)	Hose, Vacuum, 1.50id X 012.2l, Blk	3
	13	1024285	(00000000-)	Fitting, Hose, 1.51d [Wye]	1
	14	1025892	(00000000-)	Spring, Cmpr, 24.64mm X 2.16w X 50.80l	4
	15	1022912	(00000000-)	Plate, Cover, Carpet Tool [Lo- Pro]	2
	16	1025430	(00000000-)	Gasket, Cover, Floor Tool	2
	17	1029957	(00000000-)	Pin, Roll, .133d X 1.38l, Ss	4
	18	1027993	(00000000-)	Clip, Cover, Vacuum	4
	19	1025564	(00000000-)	Tool, Floor, Lo- Profile Machined	2
	20	1025455	(00000000-)	Pin, Dowel, 08mmd	4
	21	601471	(00000000-)	Pin, Clevis, 0.50d X 2.50l	2
	22	44961	(00000000-)	Tie, Cable, Nyl, 14.5l .30w 4.0 Max D	2
	23	1043939	(00000000- 10419188)	Link Assy, Bellcrank, W/ Spring Relief	1

∇ ASSEMBLY

▲ INCLUDED IN ASSEMBLY

SCRUB HEAD GROUP

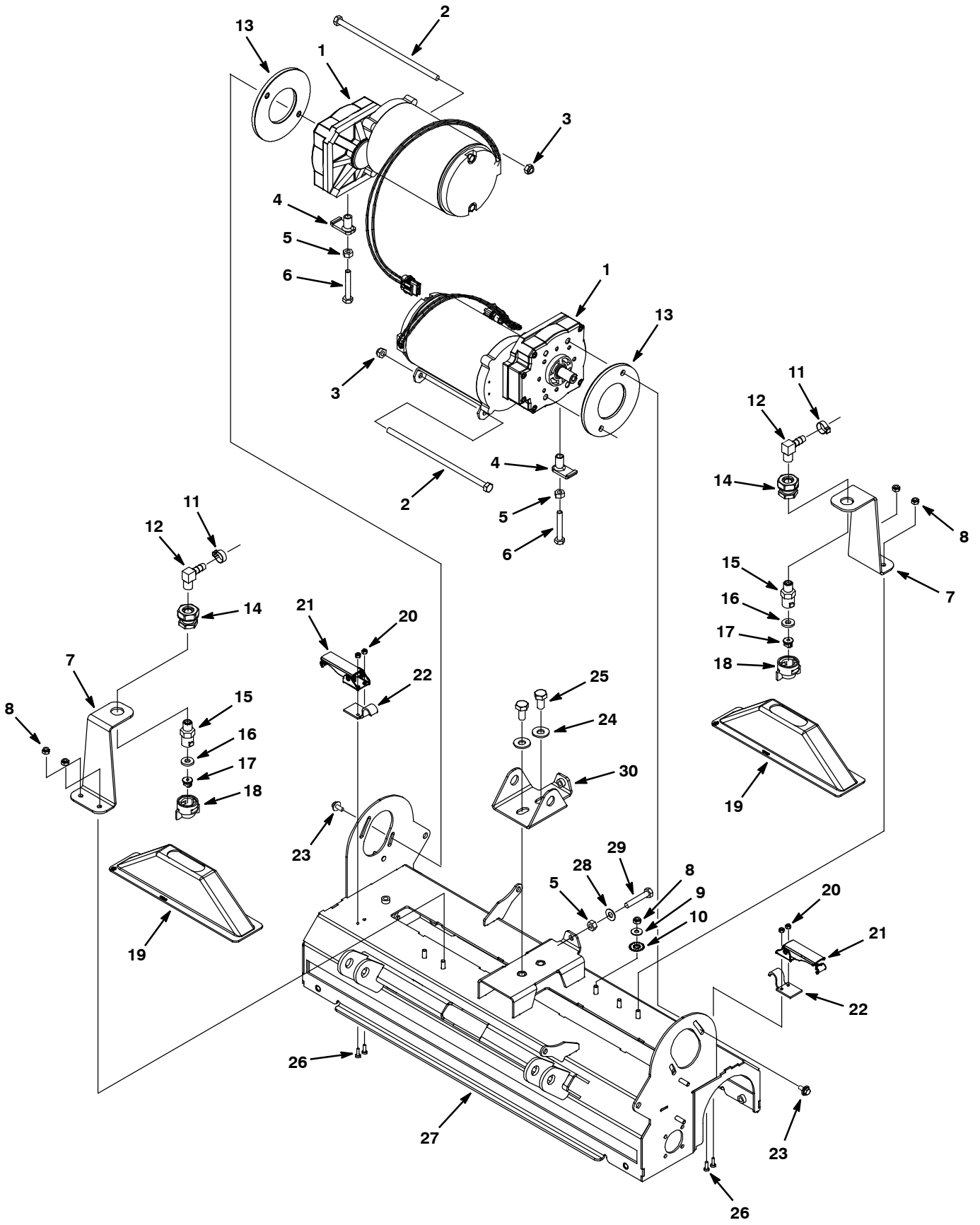

SCRUB HEAD GROUP

	Ref.	Part No.	Serial Number	Description	Qty.
∇	1	1068557	(10583279-)	Motor Kit, Ele, 24vdc 0270rpm 0.50hp	2
▲		1059370	(SEP2020-)	Brush, Motor, Replmt [Bag Of 4)	2
▲		1066574	(10583279- OCT2020)	Vr, Brush Kit, Motor (Replaced By 1059370)	2
	2	1070307	(10583279-)	Bolt, Hex, M8- 1.25 X 220mm, Pln Gr8.8	2
∇	1	1023355	(00000000- 10583278)	Motor, Ele, 24vdc 0.50hp 0270rpm 20.0a (Replaced By 1068557)	2
▲		1034117	(00000000- 10583278)	Brush, Carbon, Motor, Ele	2
	2	1019942	(00000000- 10583278)	Screw, Hex, M8 X 1.25 X 210, 8.8	2
	3	08713	(00000000-)	Nut, Hex, Lock, M8 X 1.25, Nl, Ss	2
	4	1024008	(00000000-)	Bracket, Lift, Motor Mount	2
	5	07786	(00000000-)	Nut, Hex, Std, M8 X 1.25, Ss	3
	6	578717	(00000000-)	Screw, Hex, M8 X 1.25 X 50, Ss	2
	7	1021224	(00000000-)	Bracket, Mounting, Spray Nozzle	2
	8	08712	(00000000-)	Nut, Hex, Lock, M6 X 1.00, Ss, Nl	5
	9	01684	(00000000-)	Washer, Flat, 0.25, Ss	1
	10	41141	(00000000-)	Washer, Lock, Int- Ext, 0.31	1
	11	140301	(00000000-)	Clamp, Hose, Ear, 0.62d	2
	12	150419	(00000000-)	Fitting, Brs, E90, Bm06/Pm04 [Taped]	2
	13	1033039	(00000000-)	Gasket, Motor, Brush, W/ Hdpe	2
	14	78122	(00000000-)	Fitting, Brs, Str, Pf04/Pf04, Bh	2
	15	575281000	(00000000-)	Fitting, Spray, Body [Quick- Jet]	2
	16	575276000	(00000000-)	Fitting, Gasket [Quick- Jet]	2
	17	575283000	(00000000-)	Fitting, Brs, Tip [11002, T- Jet]	2
	18	575282000	(00000000-)	Fitting, Cap [Q- Jet]	2
	19	1021642	(00000000-)	Shroud, Splash	2
	20	33932	(00000000-)	Nut, Hex, Lock, M4 X 0.70, Nl, Ss	4
	21	1006086	(00000000-)	Latch [Over- Center]	2
	22	1017780	(00000000-)	Clip, Hanger, Hose, .17d, 2hole	2
	23	1034731	(00000000-)	Screw, Hex, M6 X 1.00 X 16, Ss, Sems	4
	24	01686	(00000000-)	Washer, Flat, 0.44b 1.00d .08, Ss	2
	25	09291	(00000000-)	Screw, Hex, M10 X 1.5 X 20, Ss	2
	26	579237	(00000000-)	Screw, Pan, M4 X 0.7 X 12, Phl, Ss	4
	27	1020783	(00000000-)	Housing Wldt	1
	28	140027	(00000000-)	Washer, Flat, 0.35b 0.75d .04, Ss	1
	29	222505	(00000000-)	Screw, Hex, M8 X 1.25 X 45, Ss	1
	30	1024184	(00000000-)	Bracket, Lift [Manual Head Leveling]	1

∇ ASSEMBLY

▲ INCLUDED IN ASSEMBLY

SCRUB HEAD GROUP - CONT'D

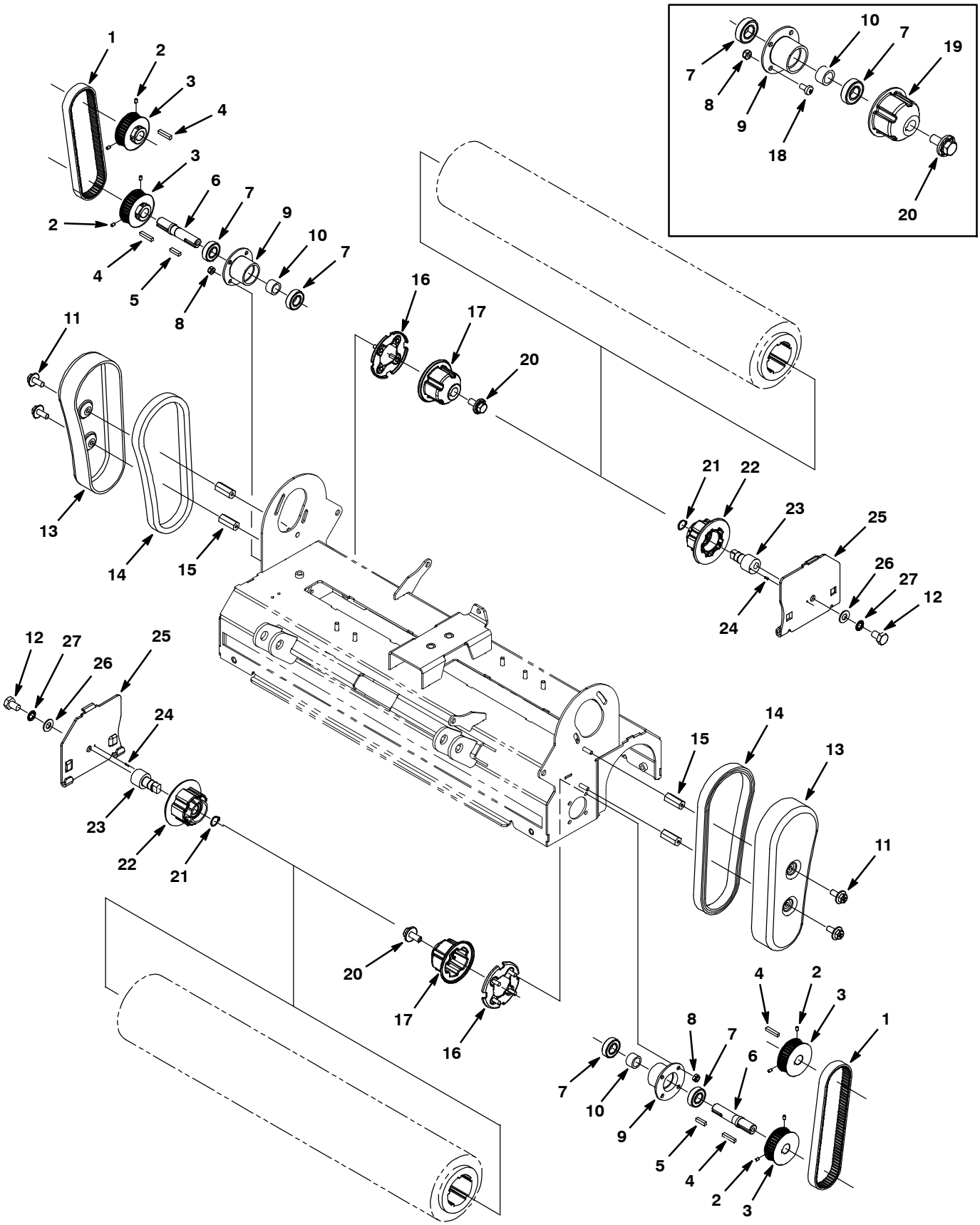

SCRUB HEAD GROUP - CONT'D

	Ref.	Part No.	Serial Number	Description	Qty.
	1	377500	(00000000-)	Belt, Synchronous, 05mm 500l[05p,Plychn]	2
	2	222818	(00000000-)	Screw, Set, #08- 32 X 0.25, Nl	8
	3	1022407	(00000000-)	Sprocket, Timing, 34tooth	4
	4	00912	(00000000-)	Key, Sq, 0.19 X 0.19, 1.00l	4
	5	00911	(00000000-)	Key, Sq, 0.19 X 0.19, 0.75l	2
	6	1023435	(00000000-)	Shaft, Drive	2
	7	41360	(00000000-)	Bearing, Ball, 0.59b 1.26d 0.35w[2seal]	4
	8	08712	(00000000-)	Nut, Hex, Lock, M6 X 1.00, Ss, Nl	8
	9	1001792	(00000000-)	Housing, Brg	2
	10	1002077	(00000000-)	Tube, 0.59id 0.81od 00.5l	2
	11	1034731	(00000000-)	Screw, Hex, M6 X 1.00 X 16, Sems, Ss	4
	12	140276	(00000000-)	Screw, Hex, M10 X 1.5 X 16, Ss	2
	13	1022557	(00000000-)	Cover, Belt	2
	14	1008675	(00000000-)	Gasket, Edge, Foam, 24.00l [Fr]	2
	15	1002078	(00000000-)	Spacer, 0.50hex X 1.25l, M6 Thread Thru	4
	16	1037864	(10423748-)	Guard, Thread	2
	17	1037873	(10423748-)	Plug, Drive, Brush, Casting	2
	18	363503	(00000000- 10423747)	Screw, Pan, M6 X 1.0 X 12, Ss	8
	19	9006405	(00000000- 10423747)	R14 Drive Plug And Thread Guard	2
	20	1020341	(00000000-)	Screw, Hex, M8 X 1.25 X 20, Ss, Sems	2
∇		222752	(00000000-)	Plug Assy, Idler, Brush	2
▲	21	01516	(00000000-)	Ring, Retaining, Ext, 0.59d, Basic	2
▲	22	1057629	(00000000-)	Plug, Idler, Brush [Sgl Brg]	2
▲	23	222177	(00000000-)	Shaft, Plug, Idler	2
▲	24	222184	(00000000-)	Pin, Roll, .094d X 0.25l, .094/.097	2
	25	1024808	(00000000-)	Door, Rlr	2
	26	32485	(00000000-)	Washer, Flat, 0.38, Sae	2
	27	43953	(00000000-)	Washer, Lock, Int, 0.38, Ss	2

∇ ASSEMBLY

▲ INCLUDED IN ASSEMBLY

SCRUB HEAD LIFT GROUP

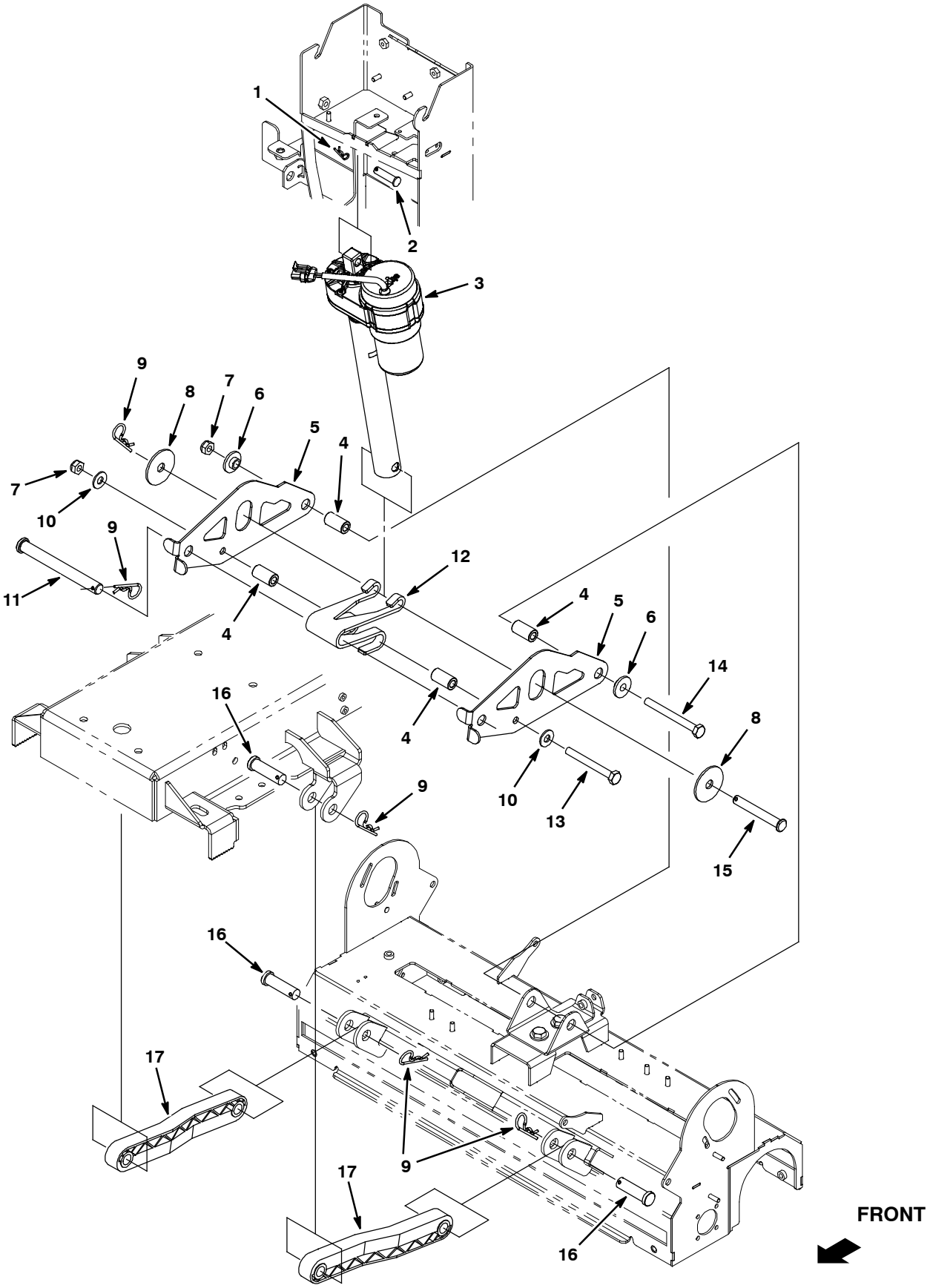

SCRUB HEAD LIFT GROUP

Ref.	Part No.	Serial Number		Description	Qty.
1	86866	(00000000-	)	Pin, Cotter, Hair, 0.38d .072 Wir	1
2	1009356	(00000000-	)	Pin, Clevis, 10mmd X 040mml	1
3	1056622	(00000000-	)	Actuator, 24vdc, 04.5strk, 0600lb	1
4	1013281	(00000000-	)	Sleeve, P/M, 0.41b 0.73d 1.3l [430 Ss]	4
5	1013278	(00000000-	)	Plate, Arm, Cntr, Lift, Scb Head	2
6	363087	(00000000-	)	Bushing, Flng, 0.44b 1.25d 0.25l	2
7	08714	(00000000-	)	Nut, Hex, Lock, M10 X 1.5, Nl, Ss	2
8	57048	(00000000-	)	Washer, Flat, 0.53b 2.13d .11, Stl, Pl	2
9	02942	(00000000-	)	Pin, Cotter, Hair, 0.62d .120 Wir	6
10	01686	(00000000-	)	Washer, Flat, 0.44b 1.00d .08, Ss	2
11	1010401	(00000000-	)	Pin, Clevis, 16mmd X 150mml	1
12	1015413	(00000000-	)	Spring, Lift, Head, Scb	1
13	09746	(00000000-	)	Screw, Hex, M10 X 1.5 X 90, Ss	1
14	05631	(00000000-	)	Screw, Hex, M10 X 1.5 X 100, Ss	1
15	1013356	(00000000-	)	Pin, Clevis, 12mmd X 090mml	1
16	222210	(00000000-	)	Pin, Clevis, 0.62d X 2.12l	4
17	222027	(00000000-	)	Arm, Lift, Head [5700]	2

VACUUM SHOE AND SOLUTION FLUSH LINE GROUP

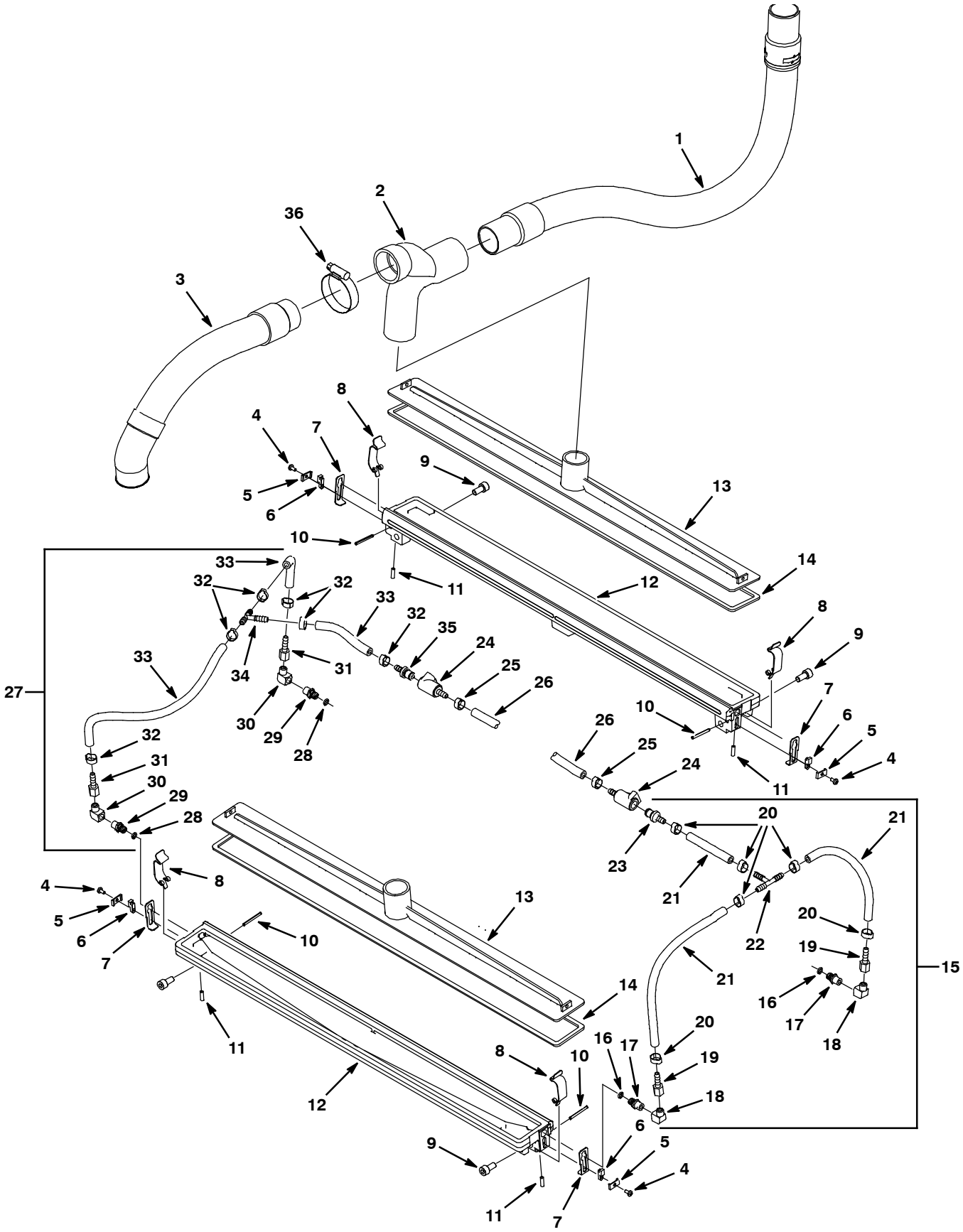

VACUUM SHOE AND SOLUTION FLUSH LINE GROUP

	Ref.	Part No.	Serial Number		Description	Qty.
	1	1024248	(00000000-	)	Hose, Vacuum, 1.50id X 029.0l, 2cuff[Rs]	1
	2	1025842	(00000000-	)	Fitting, Pvc, Y, 1.50 Vacuum Hose]	1
	3	1025779	(00000000-	)	Hose, Vacuum, 1.50id X 017.0l, 2cuff	1
	4	49697	(00000000-	)	Screw, Pan, M4 X 0.7 X 10, Ss	4
	5	1017044	(00000000-	)	Retainer, Latch	4
	6	1017855	(00000000-	)	Key, Timing, Latch	4
	7	1017840	(00000000-	)	Latch, Retaining, Nozzle	4
	8	1027993	(00000000-	)	Clip, Cover, Vacuum	4
	9	49609	(00000000-	)	Screw, Soc, M8 X 1.25 X 16, 12.9	4
	10	1029957	(00000000-	)	Pin, Roll, .133d X 1.38l, Ss	4
	11	1017871	(00000000-	)	Spring, Cmpr, 0.2od .020wir 00.8l	4
	12	1023890	(00000000-	)	Tool, Vacuum, Str Rlr [Finish Mach'D]	2
	13	1023800	(00000000-	)	Cover, Tool, Str Roll Vacuum 700mm	2
	14	1021110	(00000000-	)	Gasket, Cover, Str Roll Vacuum Tool	2
∇	15	9002902	(00000000-	)	Hose Assy, Lh, Afmkt [Gator]	1
▲	16	1017902	(00000000-	)	Seal, Org, .070 X 00.24id, 75d [Viton]	2
▲	17	1017841	(00000000-	)	Fitting, Brs, Tip, Spcl [2505 H1/8vv]	2
▲	18	150407	(00000000-	)	Fitting, Brs, E90, Pf02/Pm02 [Street]	2
▲	19	150520	(00000000-	)	Fitting, Brs, Str, Bm04/Pf02	2
▲	20	140325	(00000000-	)	Clamp, Hose, Ear, 0.50d, Ss	6
▲	21	9002916	(00000000-	)	Hose, Pvc, Gray, 0.25id 0.5od, 3l (160204)	1
▲	22	150713	(00000000-	)	Fitting, Plstc, Tee, Bm04/Bm04/Bm04	1
▲	23	1017317	(00000000-	)	Fitting, Plstc, Str, Bm04, Cplg, Mal	1
	24	1002898	(00000000-	)	Fitting, Plstc, Str, Bm04, Cplg, Fem	2
	25	140325	(00000000-	)	Clamp, Hose, Ear, 0.50d, Ss	2
	26	9002916	(00000000-	)	Hose, Pvc, Gray, 0.25id 0.5od, 3l (160204)	1
∇	27	9002901	(00000000-	)	Hose Assy, Rh, Afmkt [Gator]	1
▲	28	1017902	(00000000-	)	Seal, Org, .070 X 00.24id, 75d [Viton]	2
▲	29	1017841	(00000000-	)	Fitting, Brs, Tip, Spcl [2505 H1/8vv]	2
▲	30	150407	(00000000-	)	Fitting, Brs, E90, Pf02/Pm02 [Street]	2
▲	31	150520	(00000000-	)	Fitting, Brs, Str, Bm04/Pf02	2
▲	32	140325	(00000000-	)	Clamp, Hose, Ear, 0.50d, Ss	6
▲	33	9002916	(00000000-	)	Hose, Pvc, Gray, 0.25id 0.5od, 3l (160204)	1
▲	34	150713	(00000000-	)	Fitting, Plstc, Tee, Bm04/Bm04/Bm04	1
▲	35	1017317	(00000000-	)	Fitting, Plstc, Str, Bm04, Cplg, Mal	1
	36	11531	(00000000-	)	Clamp, Hose, Wormdrive, 1.06- 2.00d, .56w	1

∇ ASSEMBLY

▲ INCLUDED IN ASSEMBLY

SOLUTION GROUP

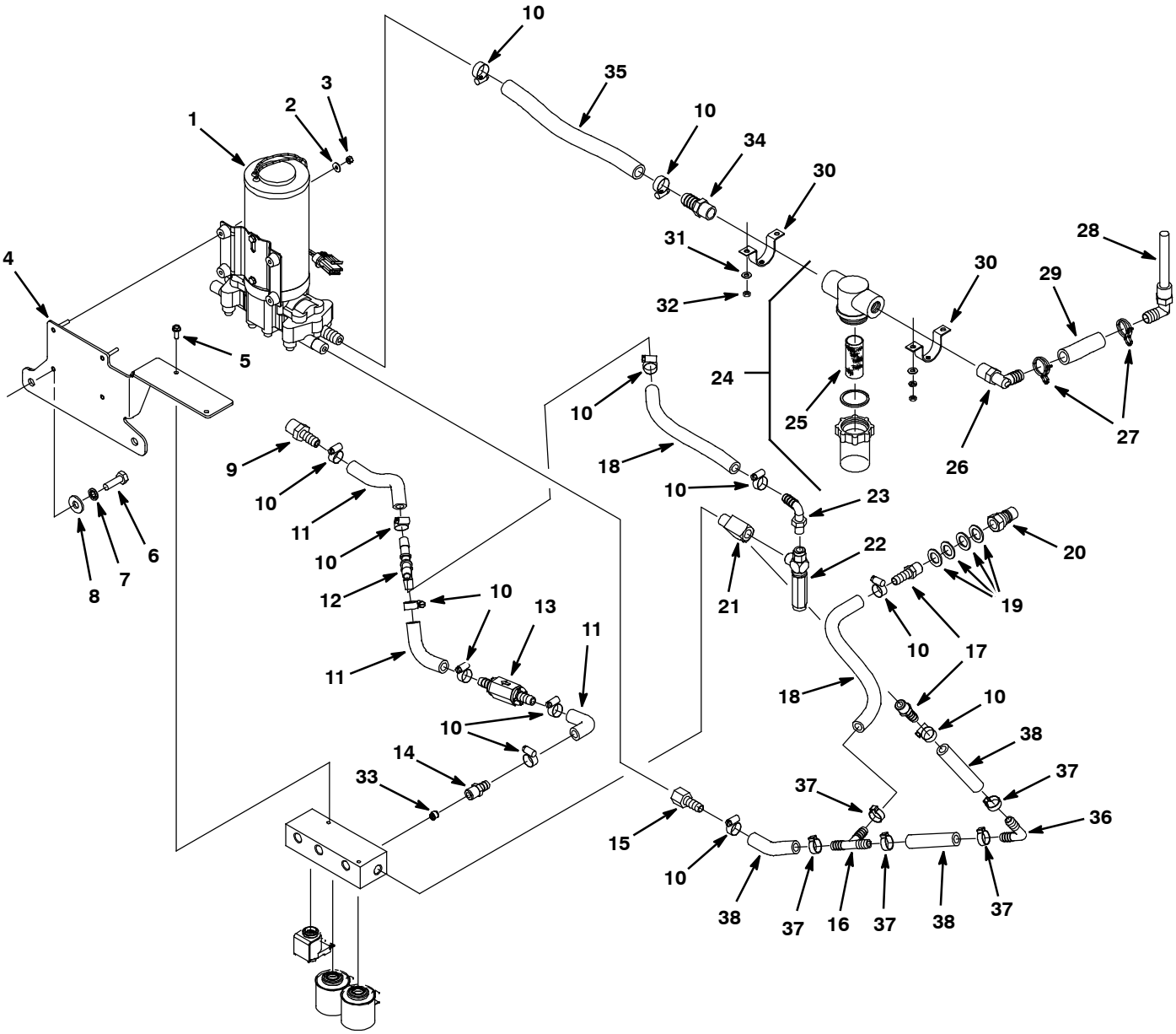

SOLUTION GROUP

	Ref.	Part No.	Serial Number		Description	Qty.
	1	1022343	(00000000-	)	Pump, Water, 24vdc, 2.0gpm 250psi (See Breakdowns)	1
	2	578186000	(00000000-	)	Washer, Flat, M4, Pl	4
	3	33932	(00000000-	)	Nut, Hex, Lock, M4 X 0.70, Nl, Ss	4
	4	1024596	(00000000-	)	Bracket, Mount, Manifold / Pump	1
	5	140751	(00000000-	)	Screw, Hex, #10- 32 X 0.50, Pl	2
	6	09740	(00000000-	)	Screw, Hex, M8 X 1.25 X 20, Ss	2
	7	43952	(00000000-	)	Washer, Lock, Int, 0.31, Ss	2
	8	01685	(00000000-	)	Washer, Flat, 0.31, Ss	2
	9	61118	(00000000-	)	Fitting, Plstc, Str, Bm06/Pm06, Nyl	1
	10	54333	(00000000-	)	Clamp, Hose, Wormdrive, 0.31- 0.88d, .31w	13
	11	9002921	(00000000-	)	Hose, Pve, Wir, 0.38id 0.62 Od, Clr, 36l (611261)	1
	12	1017255	(00000000-	)	Fitting, Plstc, Y, Bm06/Bm06/Bm06, Nyl	1
	13	210044	(00000000-	)	Valve, Check, 0001psi Bm06/Bm06	1
	14	150016	(00000000-	)	Fitting, Brs, Str, Bm06/Pf02, Spcl	1
	15	150511	(00000000-	)	Fitting, Brs, Str, Bm06/Pf04	1
	16	160310	(00000000-	)	Fitting, Plstc, Tee, Bm06/Bm06/Bm06	1
	17	150516	(00000000-	)	Fitting, Brs, Str, Bm06/Pm05	2
	18	9002920	(00000000-	)	Hose, Pvc, Brd, 0.38id 0.62 Od, 36l (160207)	1
	19	140058	(00000000-	)	Washer, Flat, 0.54b 0.88d .06, Ss [Wand]	4
	20	150933	(00000000-	)	Fitting, Brs, Qdc, Pm04 [Ser60]	1
	21	150709	(00000000-	)	Fitting, Brs, Tee, Pm04/Pf04/Pf04, Run	1
	22	210211	(00000000-	)	Valve, Water, Relief, Press, 050- 450psi	1
	23	1005564	(00000000-	)	Fitting, Plstc, E90, Bm06/Pm02, Nyl	1
∇	24	1007428	(00000000-	)	Filter, Screen, 080 Mesh, Ss Bowl, Pf06	1
▲	25	180632	(00000000-	)	Filter, Screen, In- Line Strainer	1
	26	1017532	(00000000-	)	Fitting, Plstc, E90, Bm08/Pm06	1
	27	607776	(00000000-	)	Clamp, Hose, Wir, .73 - .77, Silver	2
	28	1006924	(00000000-	)	Filter, Soltn, W/ E90 Ftg	1
	29	9002922	(00000000-	)	Hose, Pvc, Clr, 0.50id 0.75od, 36l	1
	30	605056	(00000000-	)	Bracket, Mtg, Fltr	2
	31	140011	(00000000-	)	Washer, Flat, 0.21b 0.45d .03, Ss	2
	32	09739	(00000000-	)	Nut, Hex, Lock, M5 X 0.80, Nl, Ss	2
	33	1013823	(00000000-	)	Plug, Pipe, Ss 1/8npt W/ Hole	1
	34	64743	(00000000-	)	Fitting, Plstc, Str, Bm08/Pm06	1
	35	9002995	(00000000-	)	Hose, Pvc, Wir, 0.50id 0.750d, 36l Clr	1
	36	20951	(00000000-	)	Fitting, Plstc, E90, Bm06/Bm06	1
	37	140301	(00000000-	)	Clamp, Hose, Ear, 0.62d	5
	38	613482	(00000000-	)	Hose, Pvc, Brd, 0.38id 0.62od 12.0l,Gray (160207)	1

∇ ASSEMBLY

▲ INCLUDED IN ASSEMBLY

SOLUTION GROUP - CONT'D

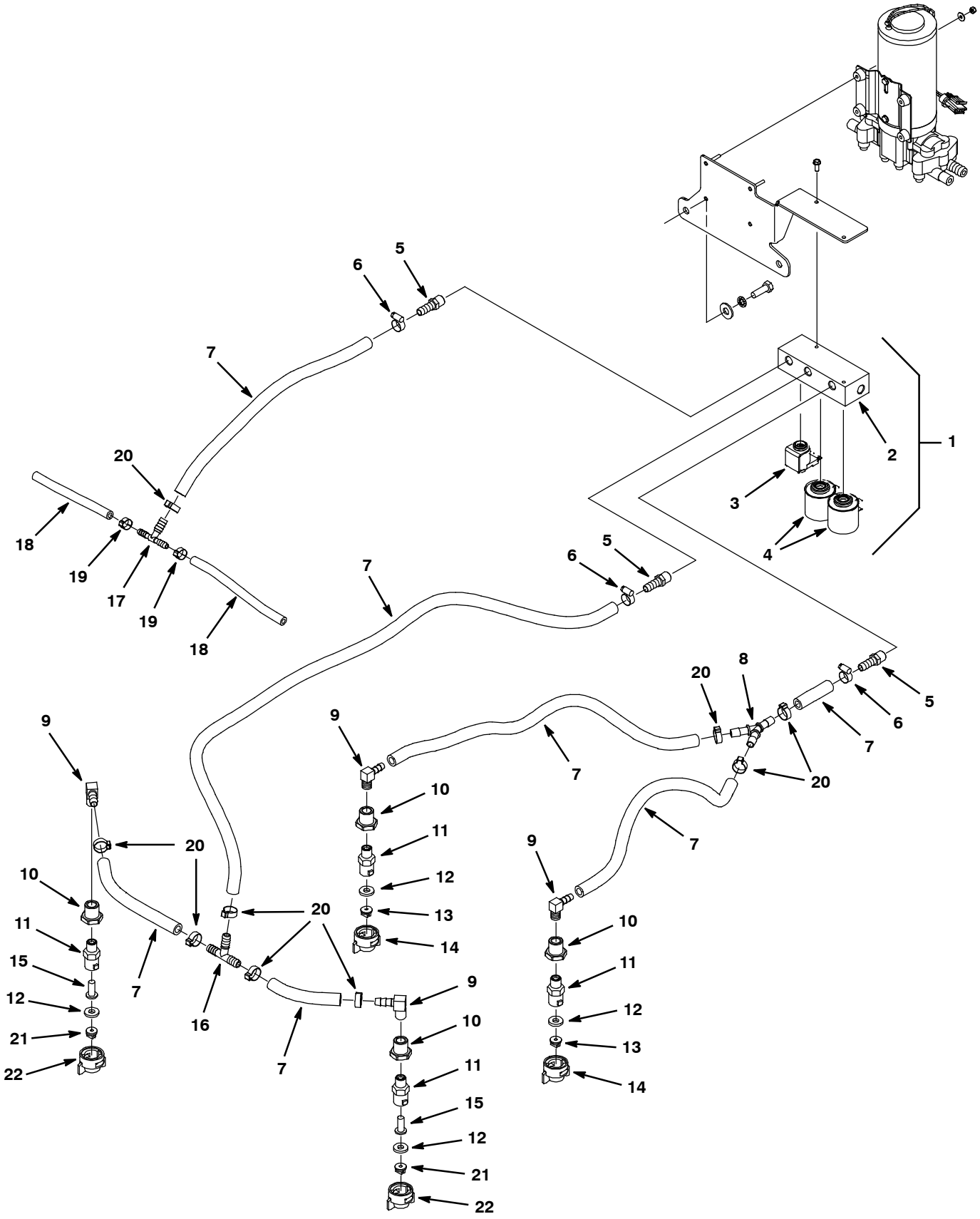

SOLUTION GROUP - CONT'D

	Ref.	Part No.	Serial Number		Description	Qty.
∇	1	1023693	(00000000-	)	Valve, Solenoid 24v, 3 Station	1
▲	2	1034116	(00000000-	)	Block, Manifold Afmkt	1
▲∇	3	1034114	(00000000-	)	Valve, Solenoid Series 3, 24v, Afmkt	1
▲▲	3	1034115	(00000000-	)	Seal, Org, Solenoid, Series 3, Afmkt	1
▲∇	4	1034112	(00000000-	)	Valve, Solenoid Series 6, 24v, Afmkt	2
▲▲	4	1034113	(00000000-	)	Seal, Org, Solenoid, Series 6, Afmkt	2
	5	150516	(00000000-	)	Fitting, Brs, Str, Bm06/Pm05	3
	6	54333	(00000000-	)	Clamp, Hose, Wormdrive, 0.31- 0.88d, .31w	4
	7	9002920	(00000000-	)	Hose, Pvc, Brd, 0.38id 0.62 Od, 36l	1
	8	1017255	(00000000-	)	Fitting, Plstc, Y, Bm06/Bm06/Bm06, Nyl	1
	9	150419	(00000000-	)	Fitting, Brs, E90, Bm06/Pm04 [Taped]	4
	10	78122	(00000000-	)	Fitting, Brs, Str, Pf04/Pf04, Bh	4
	11	575281000	(00000000-	)	Fitting, Spray, Body [Quick- Jet]	4
	12	575276000	(00000000-	)	Fitting, Gasket [Quick- Jet]	4
	13	575283000	(00000000-	)	Fitting, Brs, Tip [11002, T- Jet]	2
	14	575282000	(00000000-	)	Fitting, Cap [Q- Jet]	2
	15	575603	(00000000-	)	Filter, Screen, 024 Mesh, Check Valve	2
	16	160310	(00000000-	)	Fitting, Plstc, Tee, Bm06/Bm06/Bm06	1
	17	1014441	(00000000-	)	Fitting, Plstc, Tee, Bm04/Bm04/Bm06, Br	1
	18	9002916	(00000000-	)	Hose, Pvc, Gray, 0.25id 0.5od, 3l	1
	19	140325	(00000000-	)	Clamp, Hose, Ear, 0.50d, Ss	2
	20	140301	(00000000-	)	Clamp, Hose, Ear, 0.62d	8
	21	1022378	(00000000-	)	Fitting, Brs, Tip [11006e, Unijet]	2
	22	1022715	(00000000-	)	Cap, White [Quick- Jet]	2

∇ ASSEMBLY

▲ INCLUDED IN ASSEMBLY

BATTERY GROUP, 360Ah

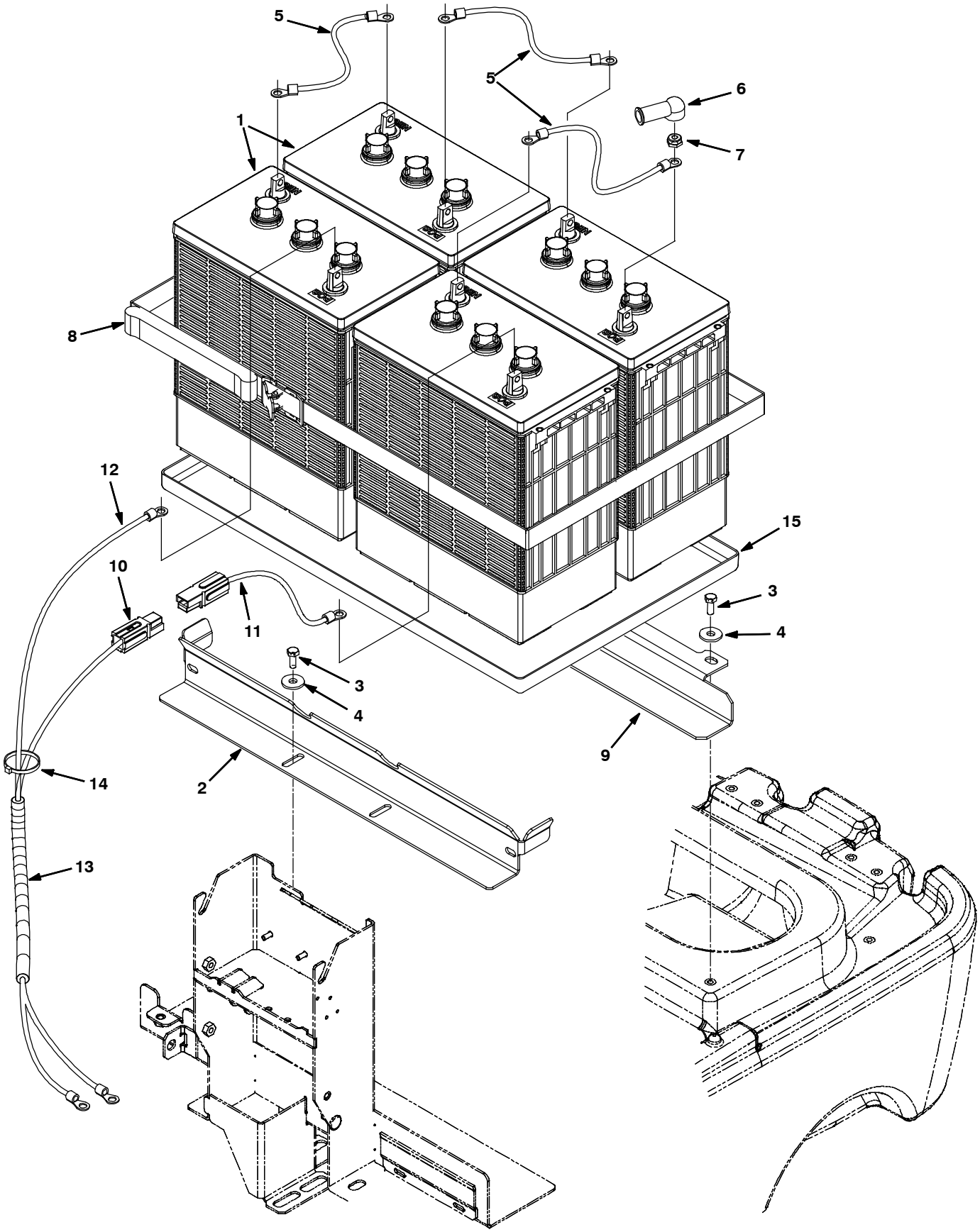

BATTERY GROUP, 360Ah

Ref.	Part No.	Serial Number		Description	Qty.
1	1070587	(00000000-	)	Battery, Wet, 06vdc, 0360ah, W/ Carton	4
2	1015039	(00000000-	)	Bracket, Battery	1
3	15675	(00000000-	)	Screw, Hex, M8 X 1.25 X 16, Ss	4
4	1017218	(00000000-	)	Washer, Flat, 0.32b 1.00d .12, Ss	4
5	223356	(00000000-	)	Cable, 04ga 12.0l Blk .34ring /.34ring	3
6	611221	(00000000-	)	Boot, Terminal, Battery, 25.4mm, Blk	8
7	87435	(00000000-	)	Nut, Hex, Flexlock, .31- 18	8
8	222682	(00000000-	)	Strap, Poly, Webbing 1.0 X 100.0	1
9	1010771	(00000000-	)	Angle, Sppt, Battery	1
10	397907	(00000000-	)	Cable, 04ga 30.0l Red .34ring / [Pp120]	1
11	397908	(00000000-	)	Cable, 04ga 08.0l Red .34ring / [Pp120]	1
12	223364	(00000000-	)	Cable, 04ga 18.0l Blk .34ring /.34ring	1
13	1020105	(00000000-	)	Sleeve, Afmkt, Nyl, #13, 01ft	1
14	49263	(00000000-	)	Tie, Cable, Nyl, 11.4l .19w 3.0 Max D	4
15	1025155	(00000000-	)	Tray, Battery, 605x370x25	1

LABEL GROUP

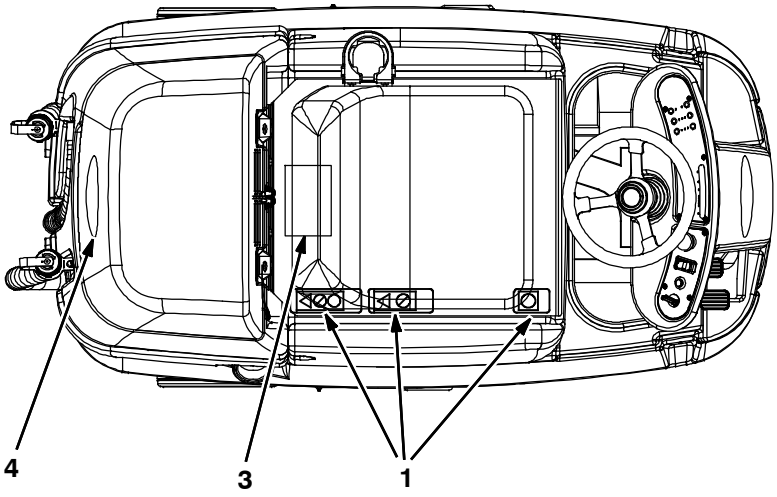

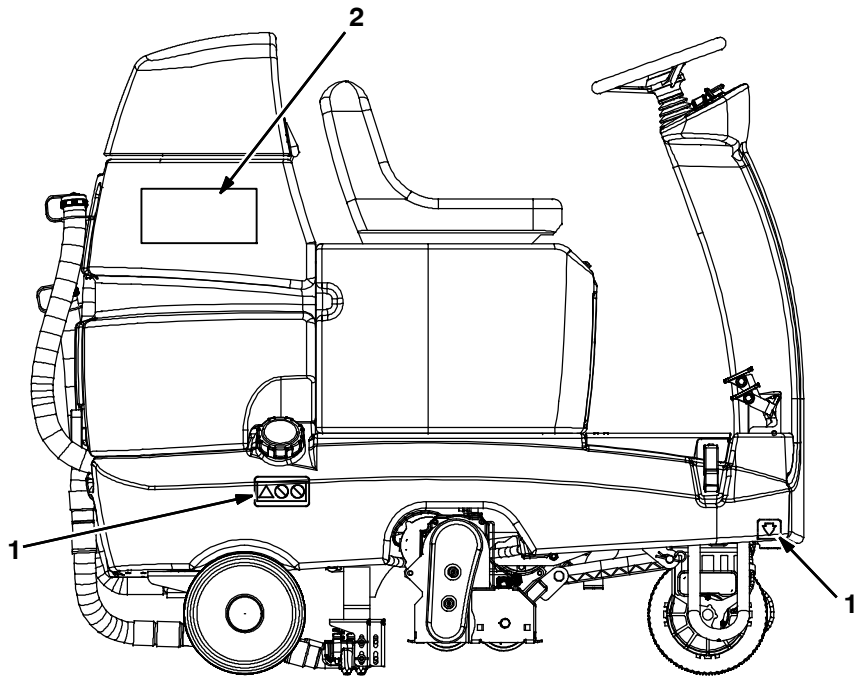

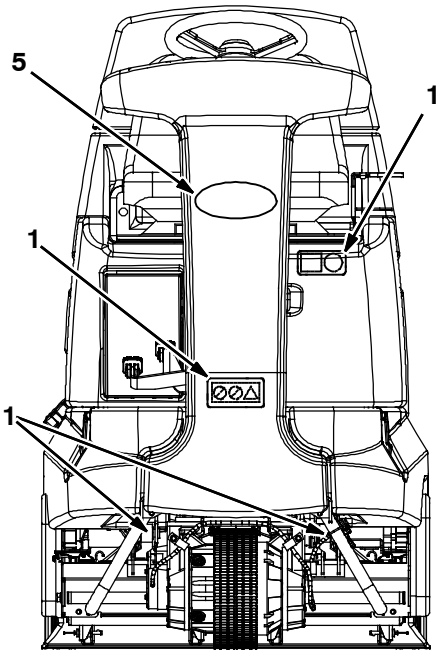

Ref.	Part No.	Serial Number	Description	Qty.
1	1015167	(00000000-)	Label Set, Info/Hzrd (North America)	1
1	1019186	(00000000-)	Label Set, Info/Hzrd, Tj [T7] (Japan)	1
1	1248367	(00000000-)	Label Set, Info/Hzrd [T7+/T7amr Ce] (Australia / Korea / Export)	1
2	1025592	(00000000-)	Label, Model, Side, White [R14] (Teal)	2
2	1035025	(00000000-)	Label, Model, Side, Gray [Aramark R14]	2
3	1026686	(00000000-)	Label, Battery, Diagram 335 Ah	1
4	1047747	(00000000-)	Label, Logo, 06.9l White / Hg [Tennant]	1
5	1047746	(00000000-)	Label, Logo, 06.9l White / Tl [Tennant]	1

ELECTRICAL DIAGRAM

1035160

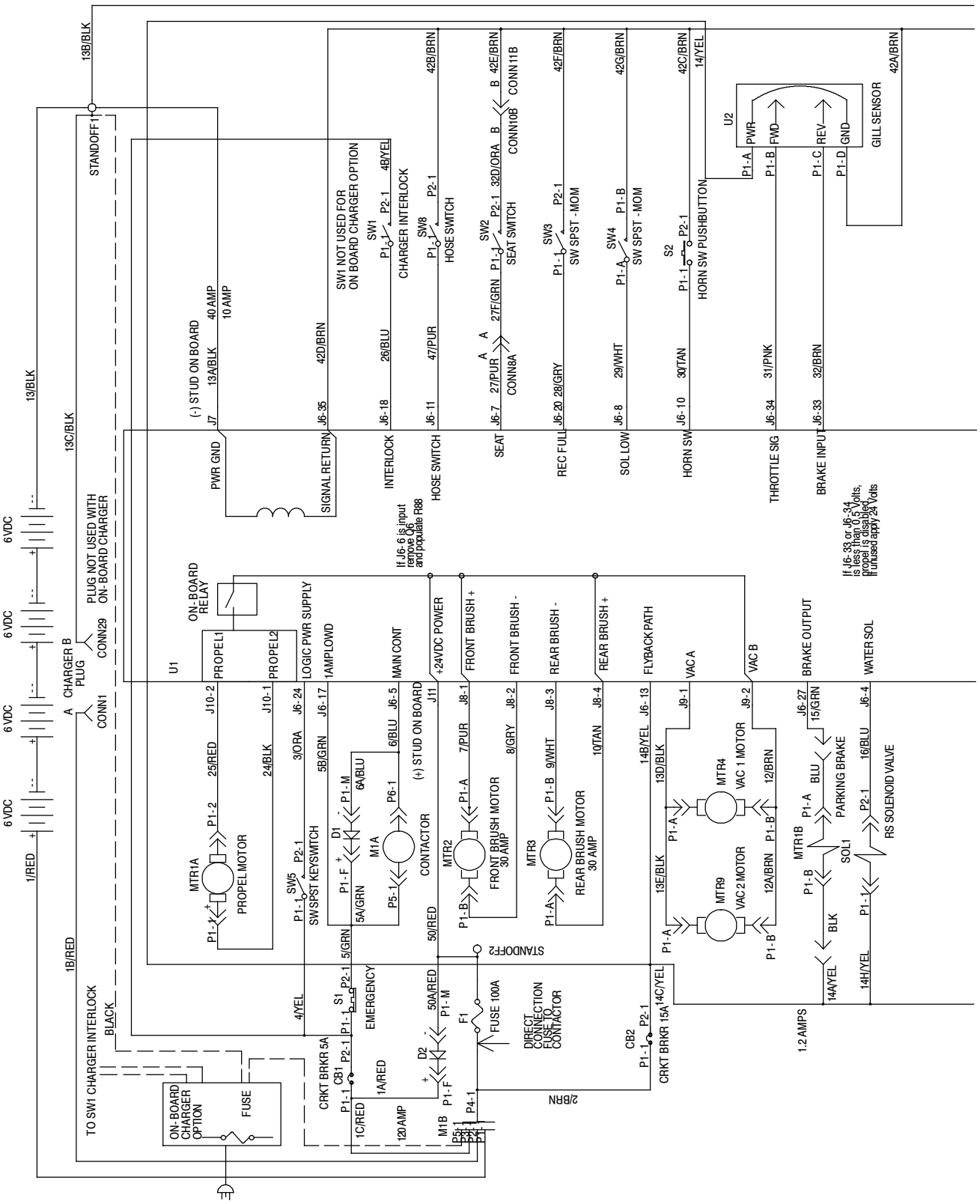

ELECTRICAL DIAGRAM

1035160

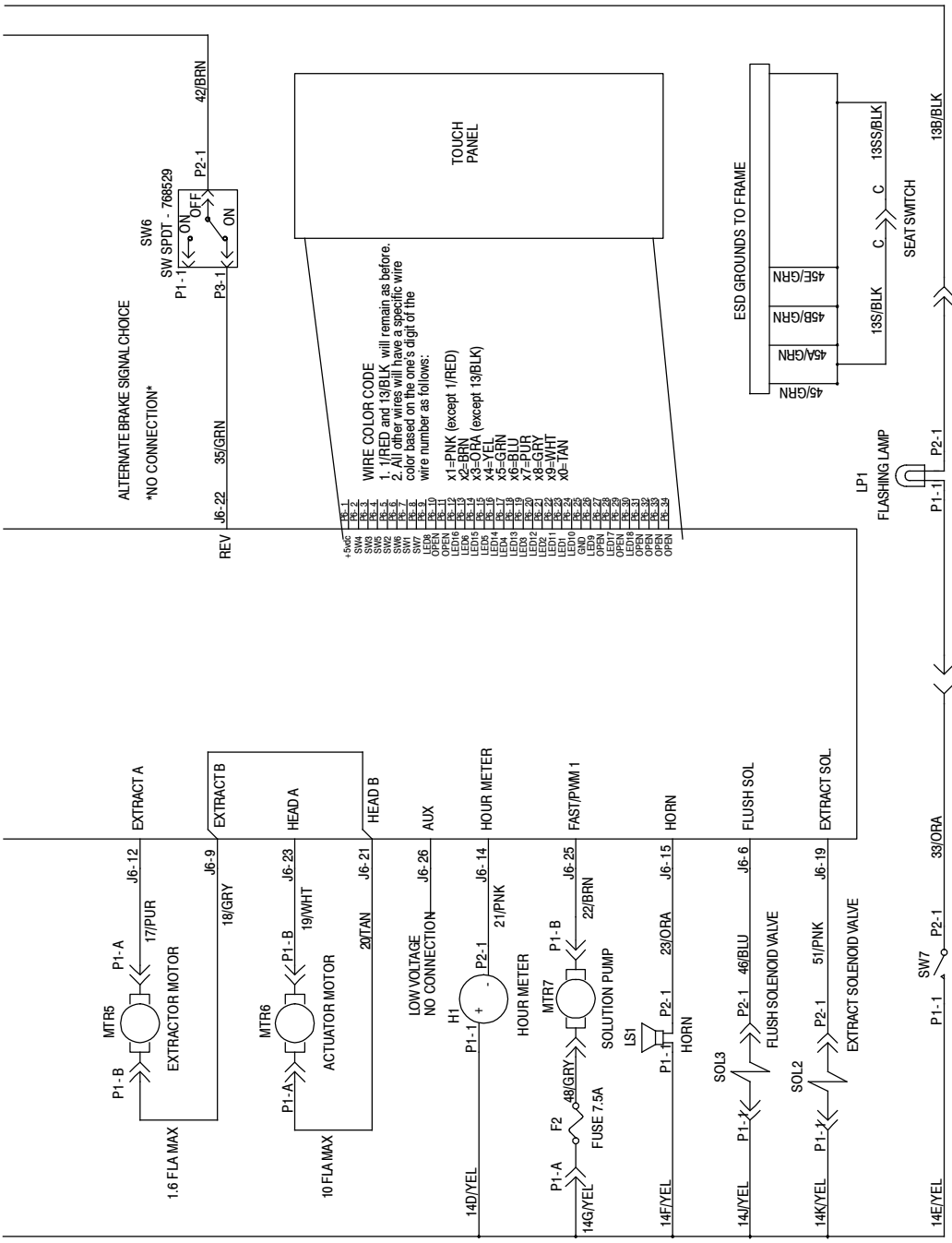

LEGEND

CB1	=	CIRCUIT BREAKER 5A
CB2	=	CIRCUIT BREAKER 15A
D1	=	DIODE
D2	=	DIODE
F1	=	FUSE 100A
F2	=	FUSE 7.5A
H1	=	HOUR METER
LP1	=	FLASHING LAMP
LS1	=	HORN
M1A	=	CONTACTOR
MTR1A	=	PROPEL MOTOR
MTR1B	=	PARKING BRAKE
MTR2	=	FRONT BRUSH MOTOR
MTR3	=	REAR BRUSH MOTOR
MTR4	=	VACUUM MOTOR 1
MTR5	=	EXTRACTOR MOTOR (PM)
MTR6	=	ACTUATOR MOTOR (PM)
MTR7	=	SOLUTION PUMP
MTR9	=	VACUUM MOTOR 2
S1	=	EMERGENCY SWITCH
S2	=	HORN SWITCH PUSH BTN
SOL1	=	RS SOLENOID VALVE
SOL2	=	EXTR SOLENOID VALVE
SOL3	=	FLUSH SOLENOID VALVE
SW1	=	CHRGR INTRLCK SWITCH
SW2	=	SEAT SWITCH
SW3	=	SOL REC FULL FLOAT SWITCH
SW4	=	SOL LOW FLOAT SWITCH
SW5	=	KEY SWITCH
SW6	=	DIRECTIONAL SWITCH
SW7	=	LIGHT SWITCH
U1	=	CONTROL BOARD
U2	=	GILL SENSOR
	=	TOUCH PANEL

ELECTRICAL WIRE HARNESS GROUP - SECTION 1 OF 5

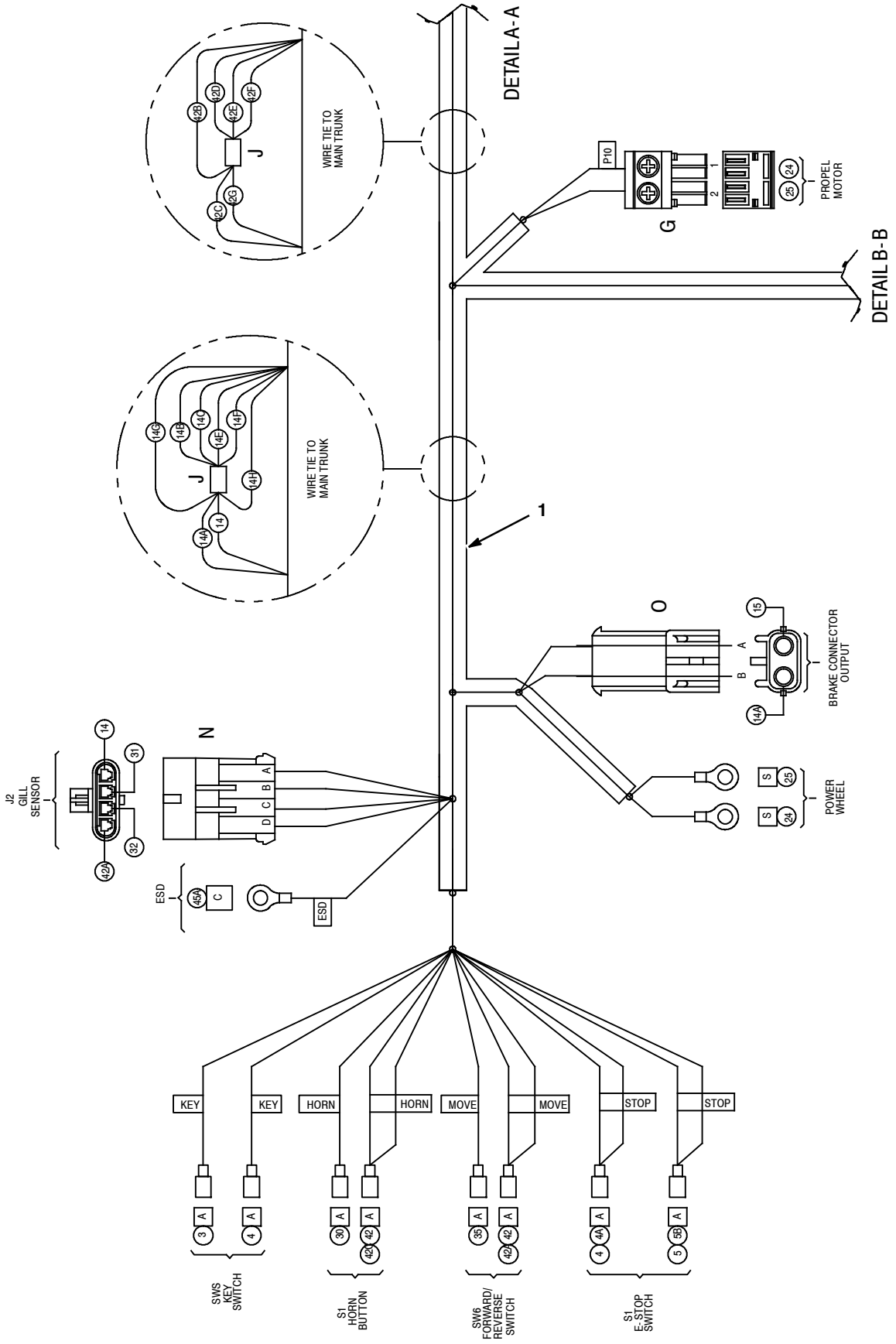

ELECTRICAL WIRE HARNESS GROUP - SECTION 2 OF 5

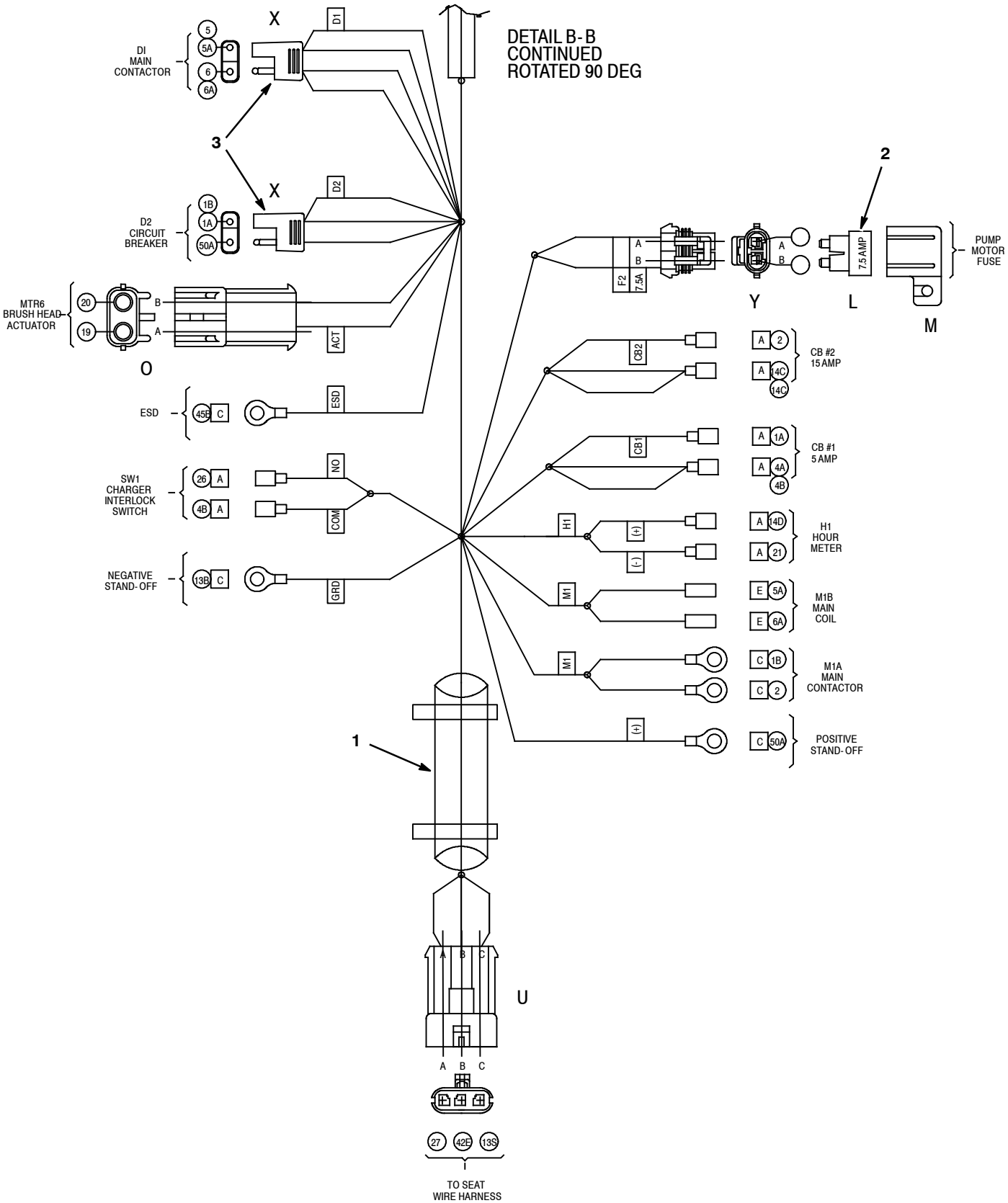

ELECTRICAL WIRE HARNESS GROUP - SECTION 3 OF 5 (S/N 10389602-)

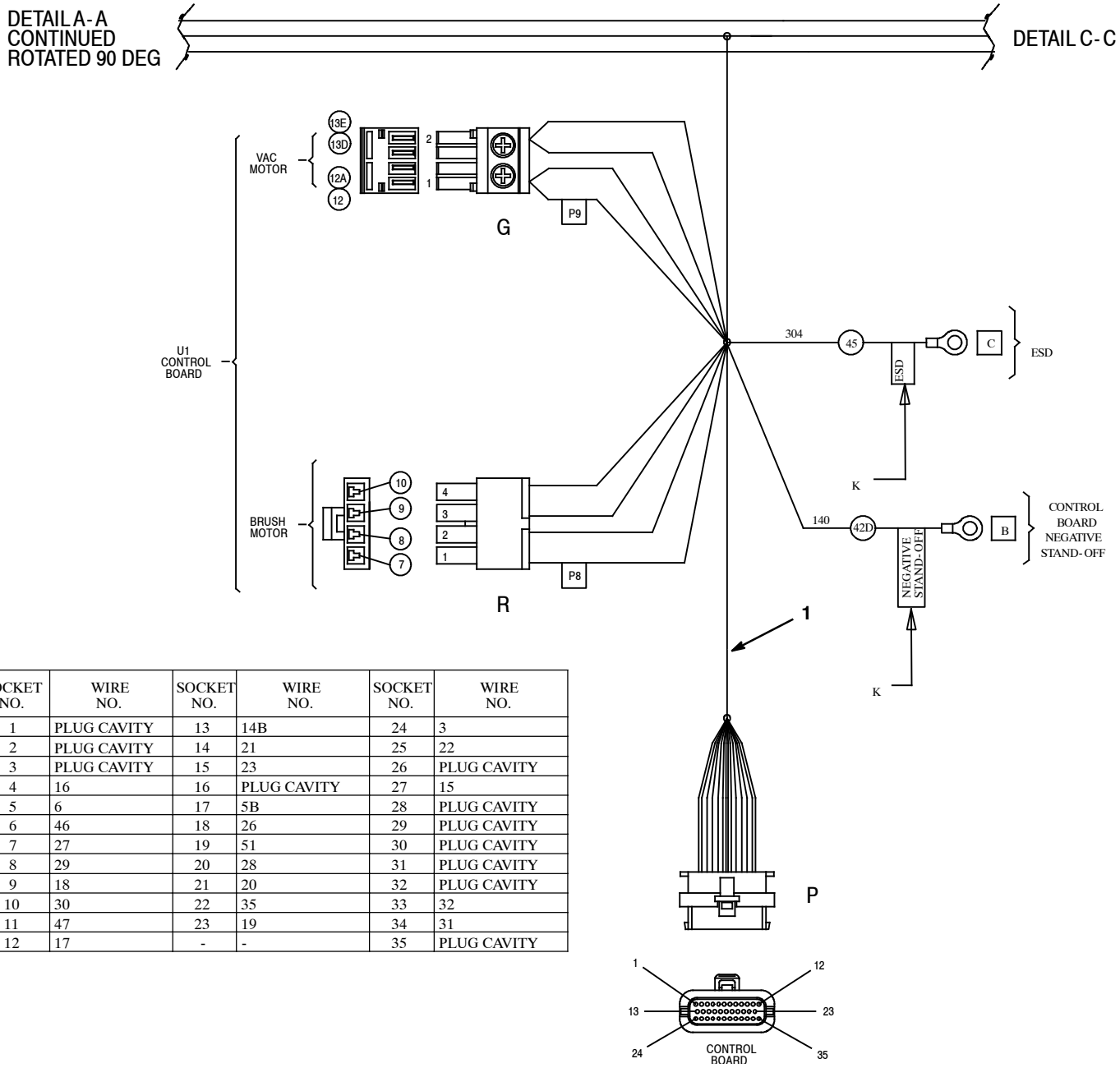

SOCKET NO.	WIRE NO.	SOCKET NO.	WIRE NO.	SOCKET NO.	WIRE NO.
1	PLUG CAVITY	13	14B	24	3
2	PLUG CAVITY	14	21	25	22
3	PLUG CAVITY	15	23	26	PLUG CAVITY
4	16	16	PLUG CAVITY	27	15
5	6	17	5B	28	PLUG CAVITY
6	46	18	26	29	PLUG CAVITY
7	27	19	51	30	PLUG CAVITY
8	29	20	28	31	PLUG CAVITY
9	18	21	20	32	PLUG CAVITY
10	30	22	35	33	32
11	47	23	19	34	31
12	17	-	-	35	PLUG CAVITY

	Ref.	Part No.	Serial Number		Description	Qty.
∇	1	1044984	(10389602-	)	Harness, Main [R14]	1
▲	2	1016039	(00000000-	)	Fuse, Blade, 007.5a, 32vdc	1
▲	3	222290	(00000000-	)	Diode, Ele, Plug	2

∇ ASSEMBLY

▲ INCLUDED IN ASSEMBLY

ELECTRICAL WIRE HARNESS GROUP - SECTION 3 OF 5 (S/N 00000000- 10389601)

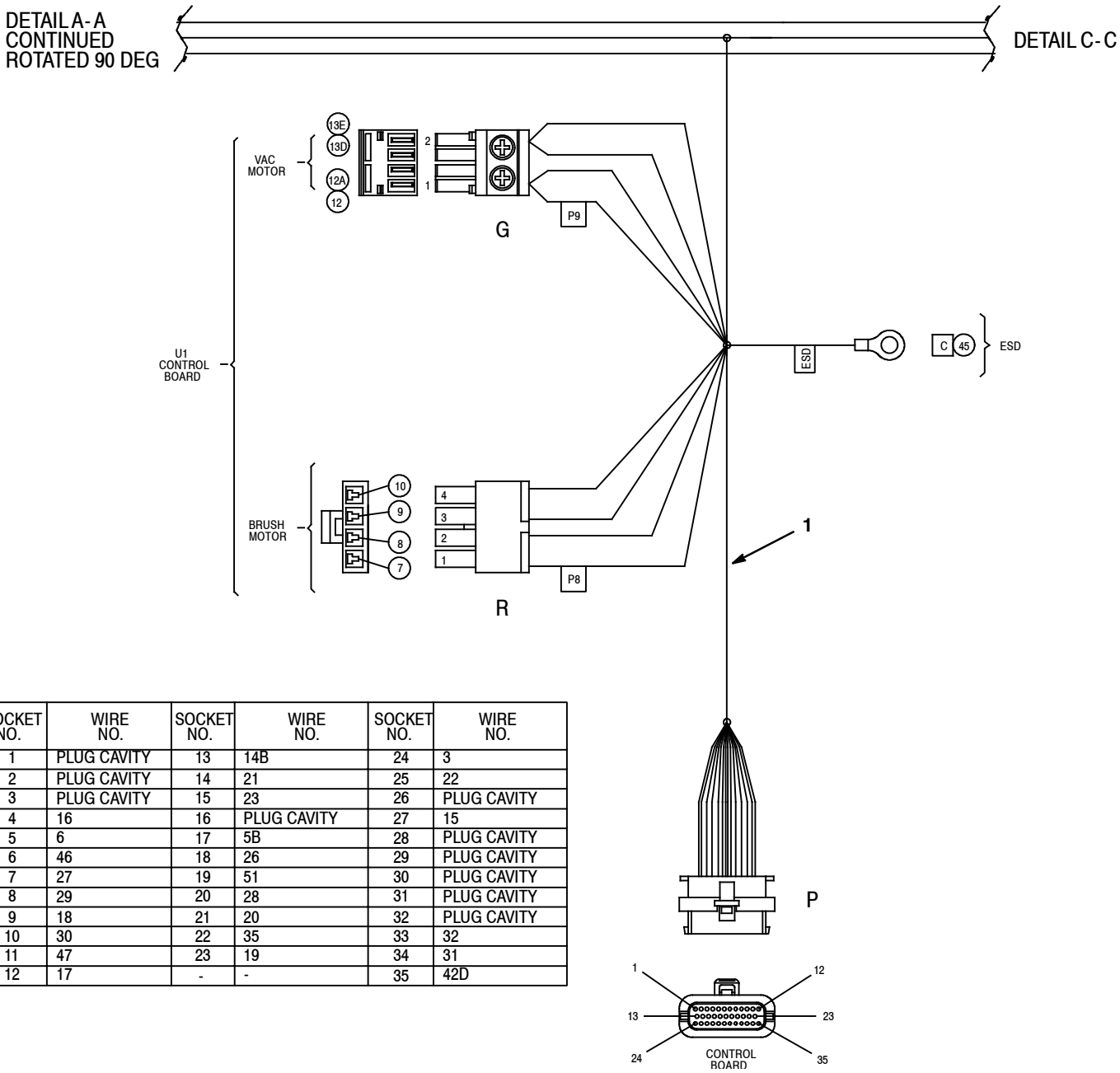

SOCKET NO.	WIRE NO.	SOCKET NO.	WIRE NO.	SOCKET NO.	WIRE NO.
1	PLUG CAVITY	13	14B	24	3
2	PLUG CAVITY	14	21	25	22
3	PLUG CAVITY	15	23	26	PLUG CAVITY
4	16	16	PLUG CAVITY	27	15
5	6	17	5B	28	PLUG CAVITY
6	46	18	26	29	PLUG CAVITY
7	27	19	51	30	PLUG CAVITY
8	29	20	28	31	PLUG CAVITY
9	18	21	20	32	PLUG CAVITY
10	30	22	35	33	32
11	47	23	19	34	31
12	17	-	-	35	42D

	Ref.	Part No.	Serial Number		Description	Qty.
∇	1	1025451	(00000000- 10389601	)	Harness, Main Rep.By 1044984	1
▲	2	1016039	(00000000-	)	Fuse, Blade, 007.5a, 32vdc	1
▲	3	222290	(00000000-	)	Diode, Ele, Plug	2

∇ ASSEMBLY

▲ INCLUDED IN ASSEMBLY

ELECTRICAL WIRE HARNESS GROUP - SECTION 4 OF 5

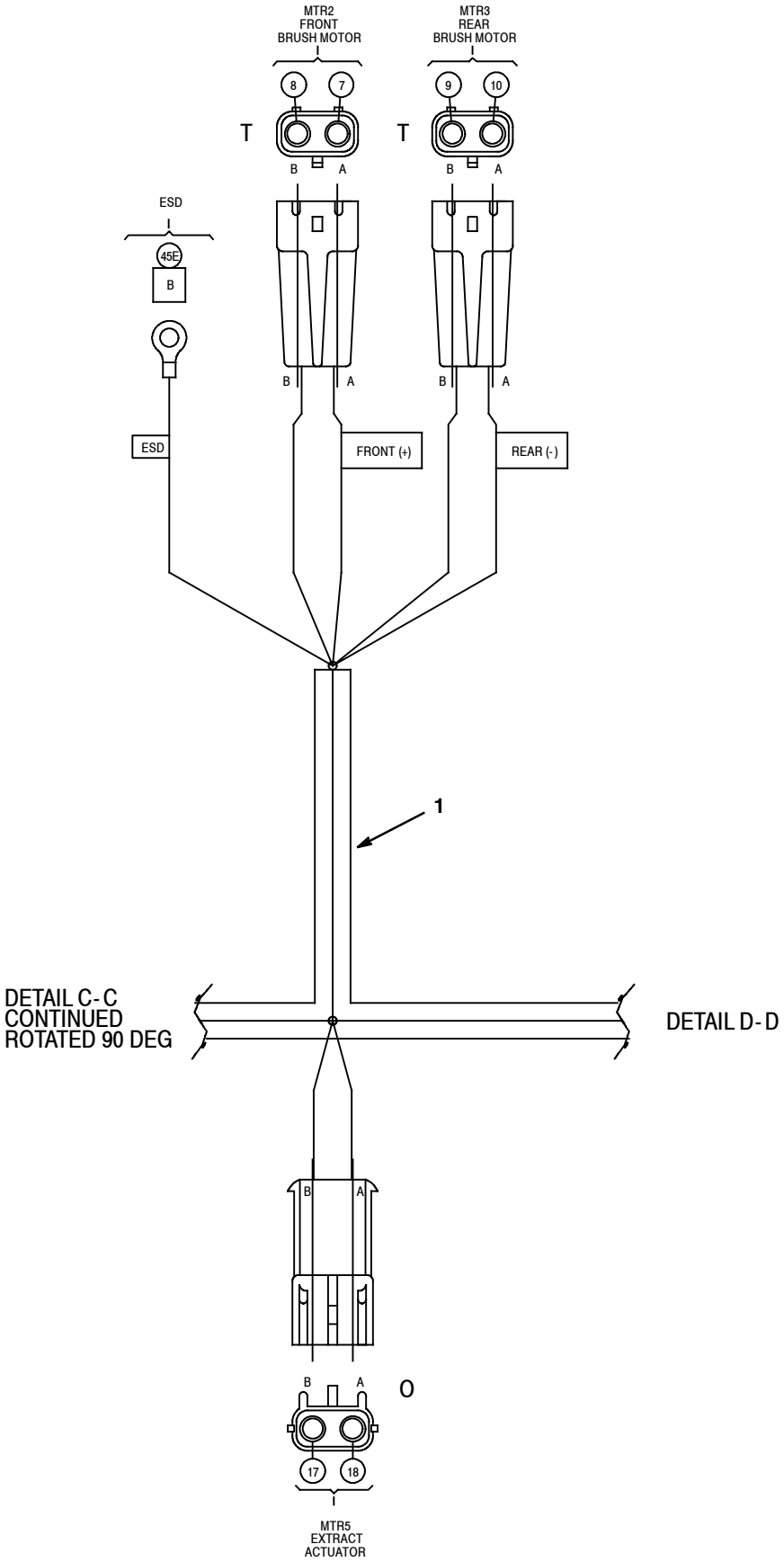

ELECTRICAL WIRE HARNESS GROUP - SECTION 5 OF 5

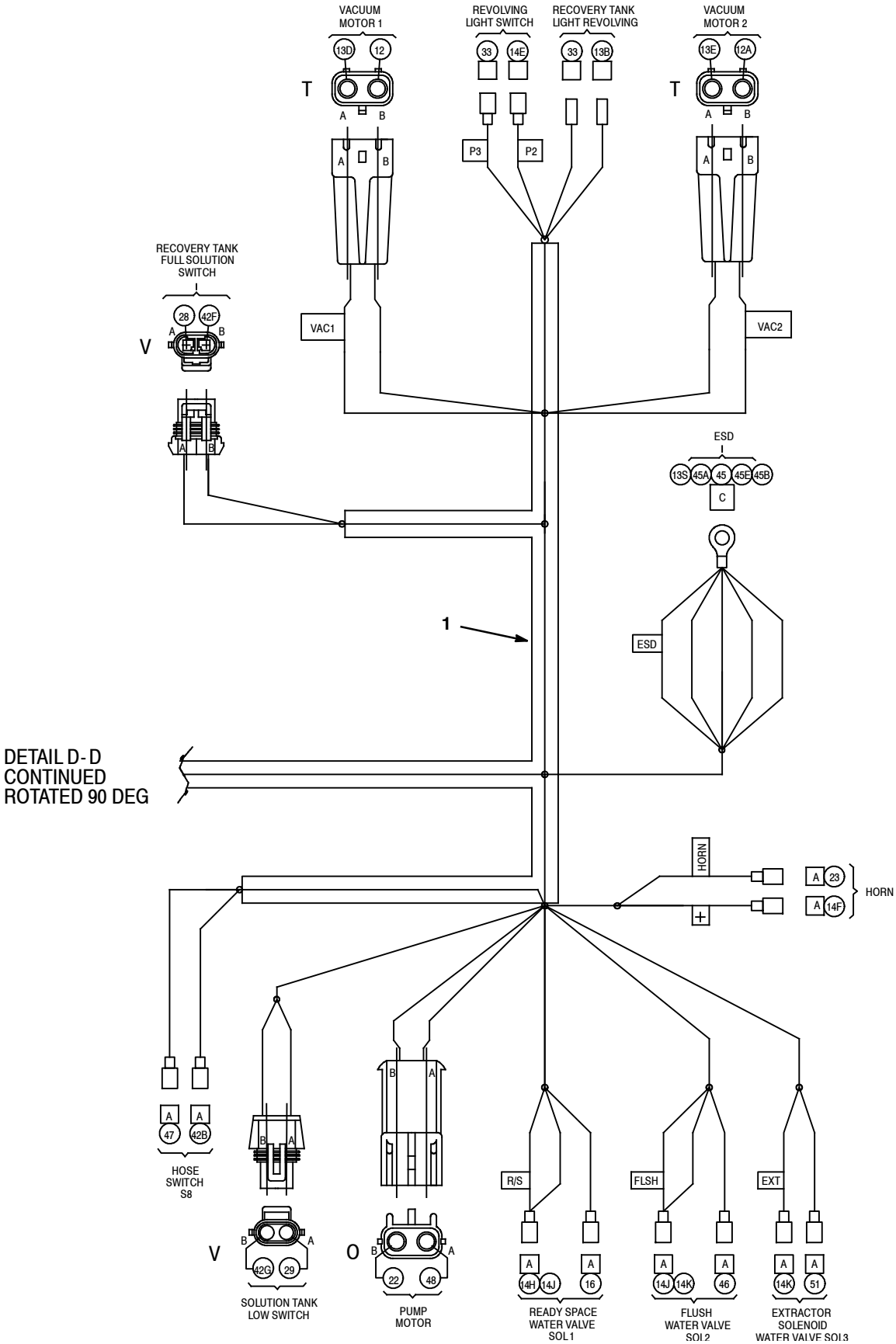

BATTERY CHARGER GROUP

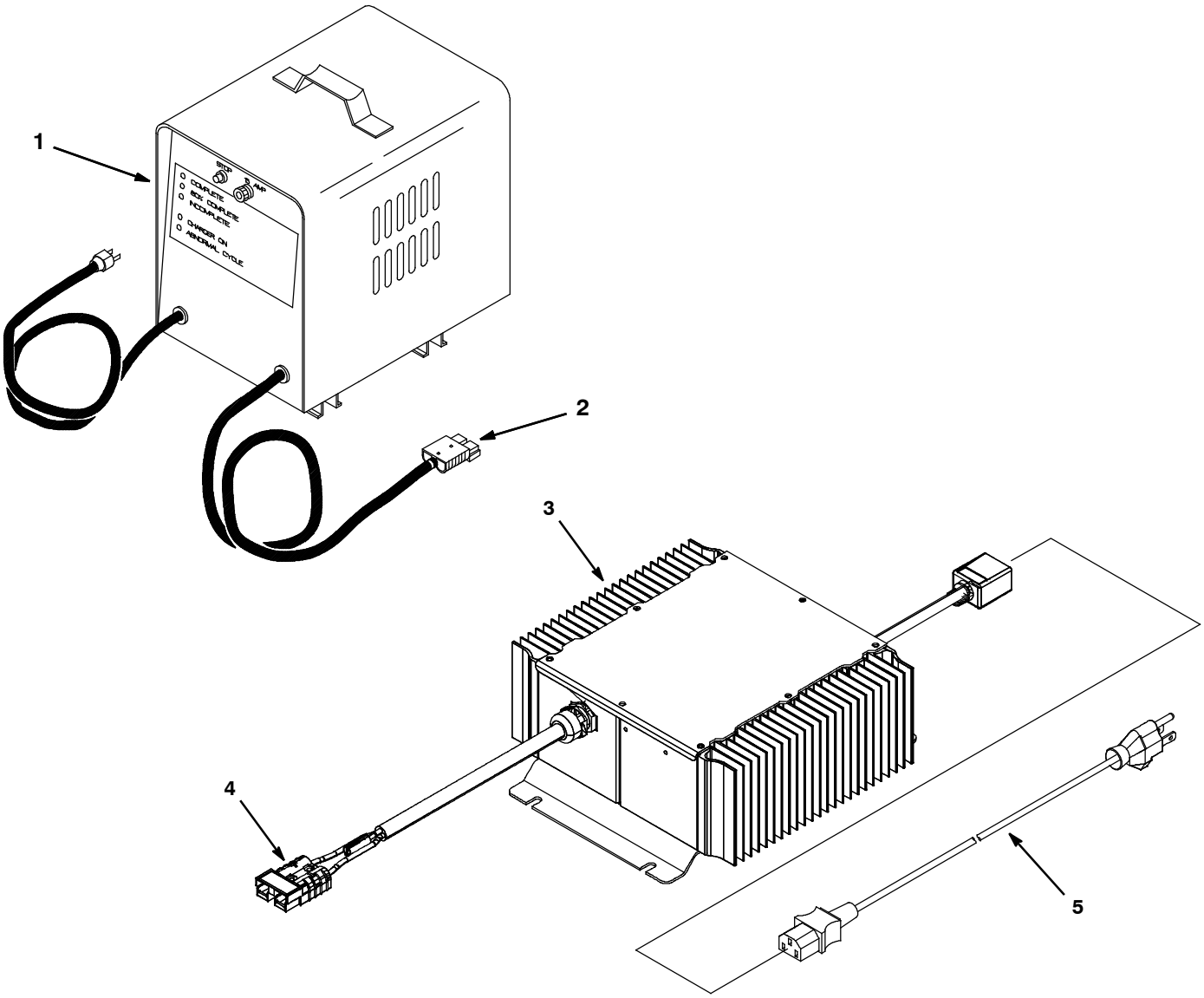

BATTERY CHARGER GROUP

	Ref.	Part No.	Serial Number	Description	Qty.
∇	1	604282	(00000000-)	Charger, 24vdc 30a Dual Vac 1ph 50/60hz (Replaced By 9009486)	1
▲	2	605387	(00000000-)	Connector, Anderson, 050a, Red [W/O Con]	1
∇	3	9009486	(00000000-)	Charger, 24vdc 25a 100- 240vac 50/60hz	1
▲	4	605387	(00000000-)	Connector, Anderson, 050a, Red [W/O Con]	1
▲	5	1017079	(00000000-)	Cord, Extn, 16ga /3, 10ft [Sjt] (North America)	1
	5	1026325	(00000000-)	Cord, Power, 1.0mm2/3 Blk[2.5meter, Aus] (Australia)	1
	5	1019426	(00000000-)	Cord, Charger, Ele, Tj (Japan)	1
	5	1032849	(00000000-)	Cord, Power, Blk [4.5meter, Ce] (Korea / Export)	1
	5	1048304	(00000000-)	Cord, Power [4.5meter, India, S.Africa]	1
	5	1026330	(00000000-)	Cord, Power, 1.0mm2 [2.5meter, China]	1
	5	1032820	(00000000-)	Cord, Power, Blk [4.5meter, Uk] (United Kingdom)	1

∇ ASSEMBLY

▲ INCLUDED IN ASSEMBLY

MANUAL BATTERY WATERING SYSTEM
(S/N 11021176 -)

355852

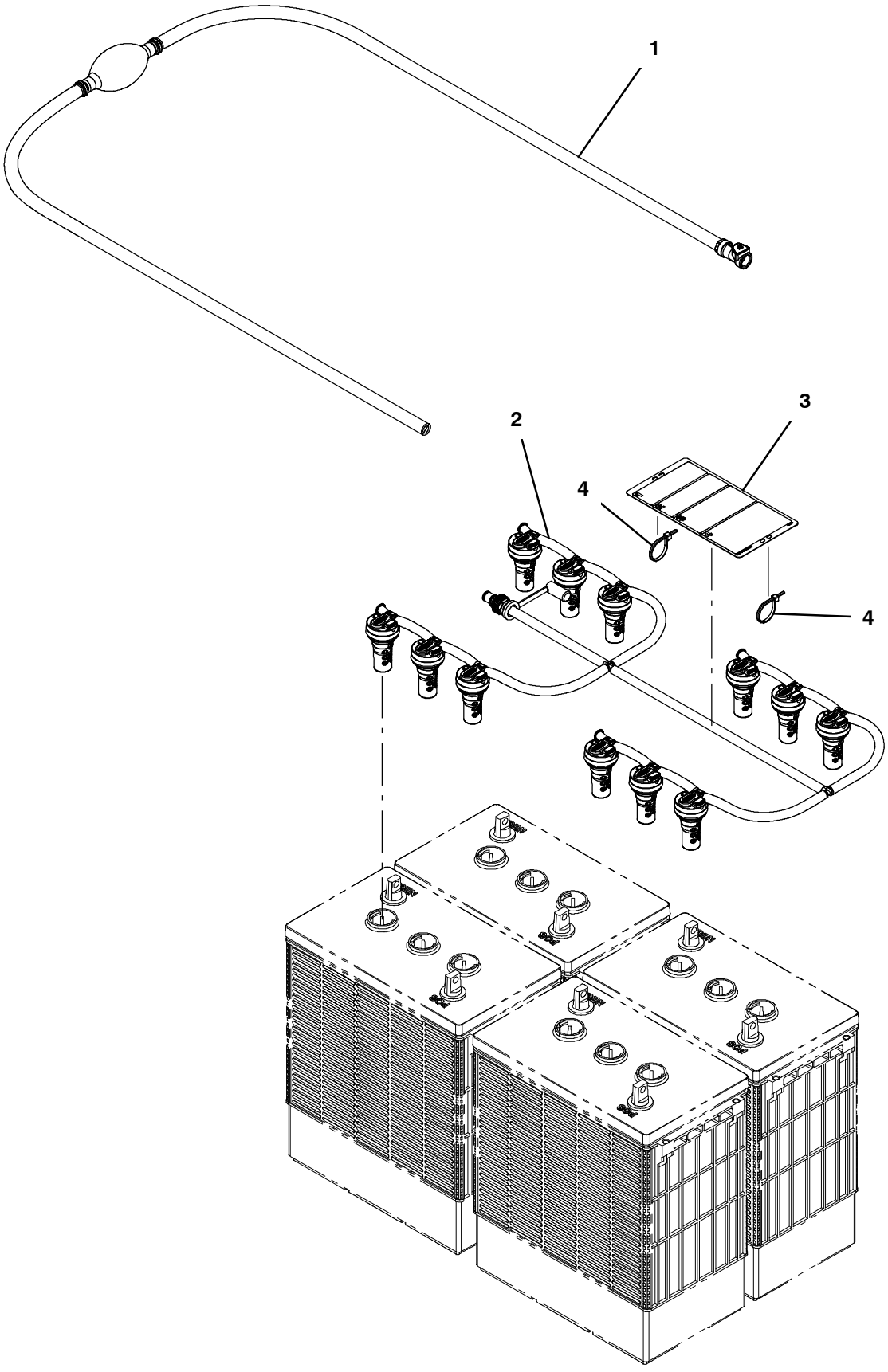

MANUAL BATTERY WATERING SYSTEM
(S/N 11021176 -)

	Ref.	Part No.	Serial Number		Description	Qty.
∇		9021123*	(11021176-	)	Fill Kit, Battery, manual, Ci [Trojan]	1
▲	1	1236295	(11021176-	)	Pump, Hand, Battery	1
▲	2	9018988	(11021176-	)	Distribution Kit, Water, Battery	1
▲	3	1253250	(11021176-	)	Label, Tag, Battery [Bwt Watering]	1
▲	4	130773	(11021176-	)	Tie, Cable, Nyl, 11.0l, .14w, 3.0 Max. D	2

*THIS KIT IS INTENDED FOR USE WITH TROJAN® LEAD ACID BATTERIES ONLY.

∇ ASSEMBLY

▲ INCLUDED IN ASSEMBLY

HYDROLINK® BATTERY WATERING SYSTEM KIT
(S/N 00000000 - 11021175)

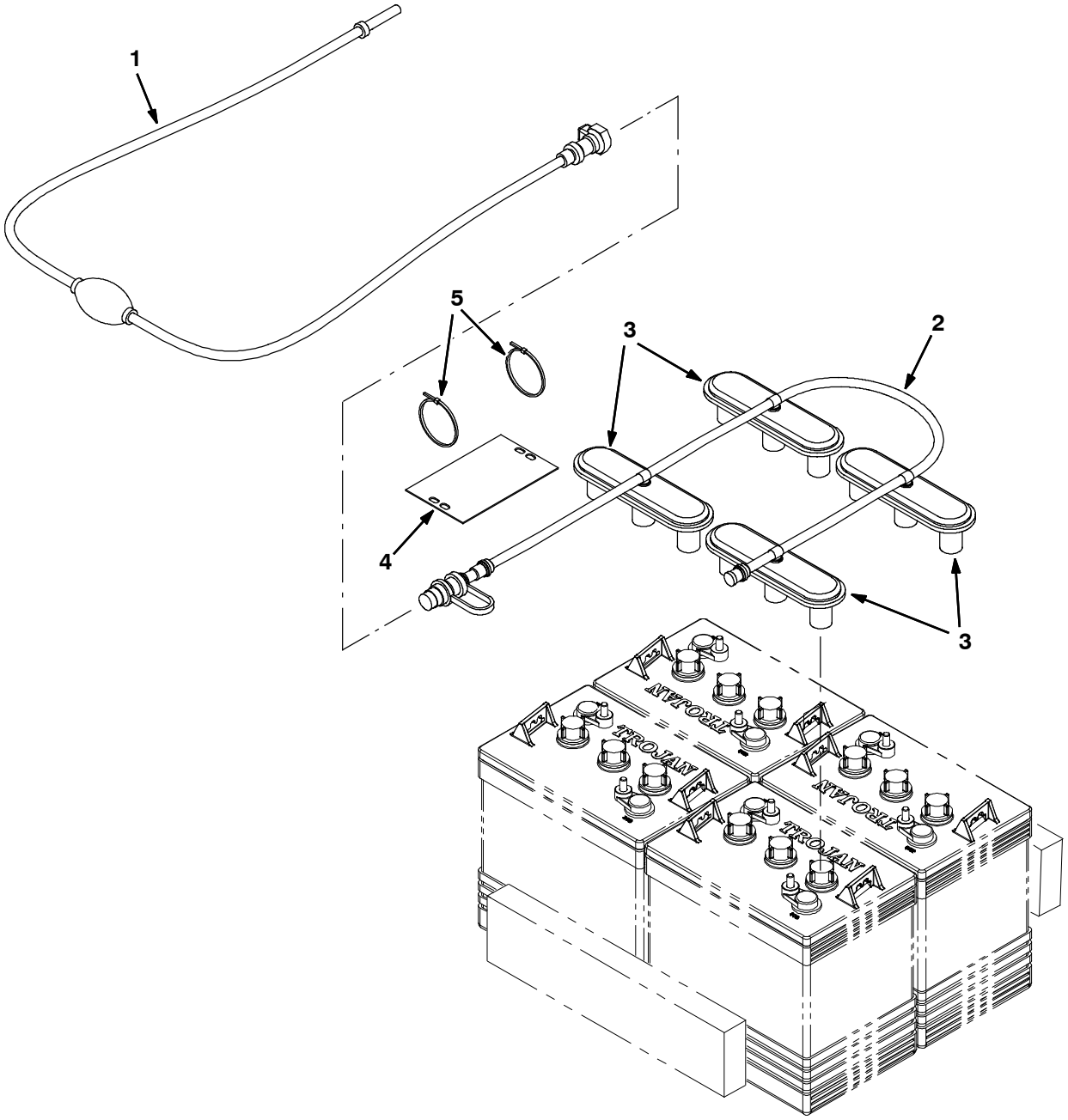

HYDROLINK® BATTERY WATERING SYSTEM KIT (S/N 00000000 - 11021175)

	Ref.	Part No.	Serial Number	Description	Qty.
∇		9010300*	(00000000- 11021175)	Pump Kit, Fill, Battery,24vdc, Ci [Trojan] (Replaced By 9021123)	1
▲	1	1058939	(00000000- 11021175)	Pump Kit, Fill, Battery	1
▲	2	1229544	(00000000- 11021175)	Tube, Water, Battery, 24vdc [Trojan]	1
▲	3	1204142	(00000000- 11021175)	Cap, Fill, Battery [Trojan]	4
▲	4	1071084	(00000000- 11021175)	Label, Tag, Battery [Hydrolink Watering]	1
▲	5	130773	(00000000- 11021175)	Tie, Cable, Nyl, 11.0l, .14w, 3.0 Max. D	2

*THIS KIT IS INTENDED FOR USE WITH TROJAN® LEAD ACID BATTERIES ONLY.

HYDROLINK® IS A REGISTERED TRADEMARK OF TROJAN® BATTERY COMPANY.

∇ ASSEMBLY

▲ INCLUDED IN ASSEMBLY

WAND GROUP, LOW PRESSURE 13 in / 330 mm

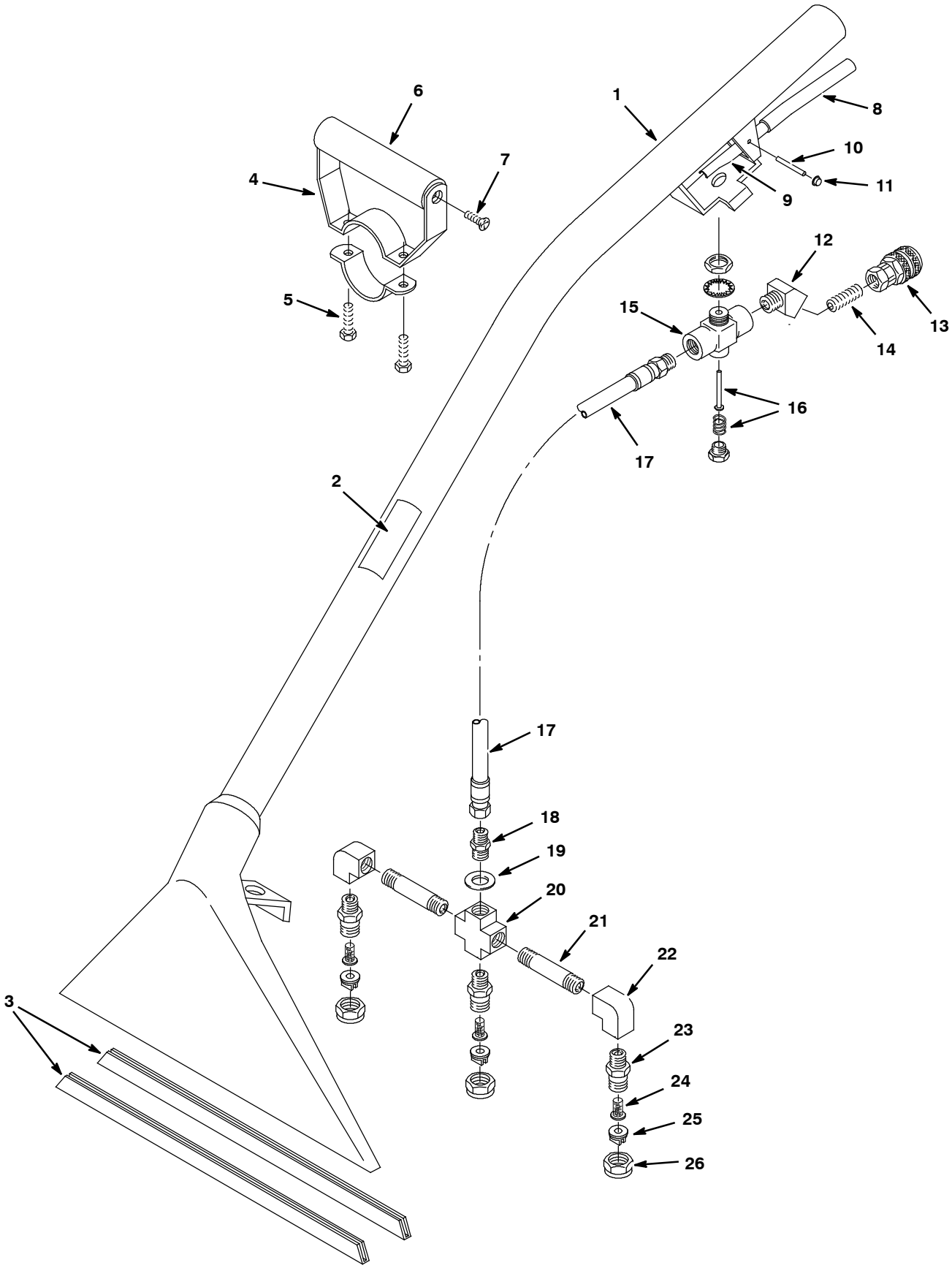

WAND GROUP, LOW PRESSURE 13 in / 330 mm

	Ref.	Part No.	Serial Number		Description	Qty.
∇		600048	(00000000-	)	Tool, Floor, 13.0w, 33cm [W/3 Nozzles]	1
▲	1	200403.BK	(00000000-	)	Tool, Pickup, Floor, 12w, Blk	1
▲	2	120846	(00000000-	)	Label, Low- Press Floor Tool	1
▲	3	200939	(00000000-	)	Plate, Tool, Floor, 13.00 [Shoe]	2
▲∇	4	200927	(00000000-	)	Grip, Hand, Adj, Complt	1
▲▲	5	01697	(00000000-	)	Screw, Hex, .25- 20 X 0.62, Ss	2
▲▲	6	200912	(00000000-	)	Grip, Handle, Foam	1
▲▲	7	140834	(00000000-	)	Screw, Flt, .25- 20 X 0.62, Phl, Ss	2
▲	8	200809	(00000000-	)	Sleeve, Handle / Floor Tool	1
▲	9	200902	(00000000-	)	Handle, Valve [Imperial]	1
▲	10	140605	(00000000-	)	Pin, Handle [Imperial Eastman]	1
▲	11	140520	(00000000-	)	Nut, Push, .25id, Blk, Pl	2
▲	12	150403	(00000000-	)	Fitting, Brs, E45, Pf04/Pm04 [Taped]	1
▲	13	150913	(00000000-	)	Fitting, Brs, Qdc, Pf04 [Ser60]	1
▲	14	150615	(00000000-	)	Fitting, Brs, Str, Pm04, Close, T	1
▲∇	15	210150	(00000000-	)	Valve, Water, Flow Cntrl, Pf04/Pf04	1
▲▲	16	190603	(00000000-	)	Imperial Eastman Kit, Repair	1
▲	17	160170	(00000000-	)	Hose Assy, Wand, 47.34l[Endtoend, 42059]	1
▲	18	150606	(00000000-	)	Fitting, Brs, Str, Pm04/Pm04 X1.38l[Nip]	1
▲	19	140058	(00000000-	)	Washer, Flat, 0.54b 0.88d .06, Ss [Wand]	1
▲∇		700062	(00000000-	)	Bar Assy, Spray, 12inch, W/O Tip[Flr Tl]	1
▲▲	20	150700	(00000000-	)	Fitting, Brs, Cross, Pf04/Pf04/Pf04/Pf04	1
▲▲	21	150600	(00000000-	)	Fitting, Brs, Nipple, .25qm X 2.0[Taped]	2
▲▲	22	150401	(00000000-	)	Fitting, Brs, E90, Pf04/Pf04	2
▲▲	23	200993	(00000000-	)	Fitting, Brs, Pm04 [Spray Body]	3
▲	24	200996	(00000000-	)	Filter, Screen, 100 Mesh, Check Valve	3
▲	25	200964	(00000000-	)	Fitting, Brs, Tip [11003, T- Jet]	3
▲	26	200994	(00000000-	)	Cap, Nozzle, Spray [#8002]	3

∇ ASSEMBLY

▲ INCLUDED IN ASSEMBLY

WAND GROUP, LOW PRESSURE 16 in / 406 mm

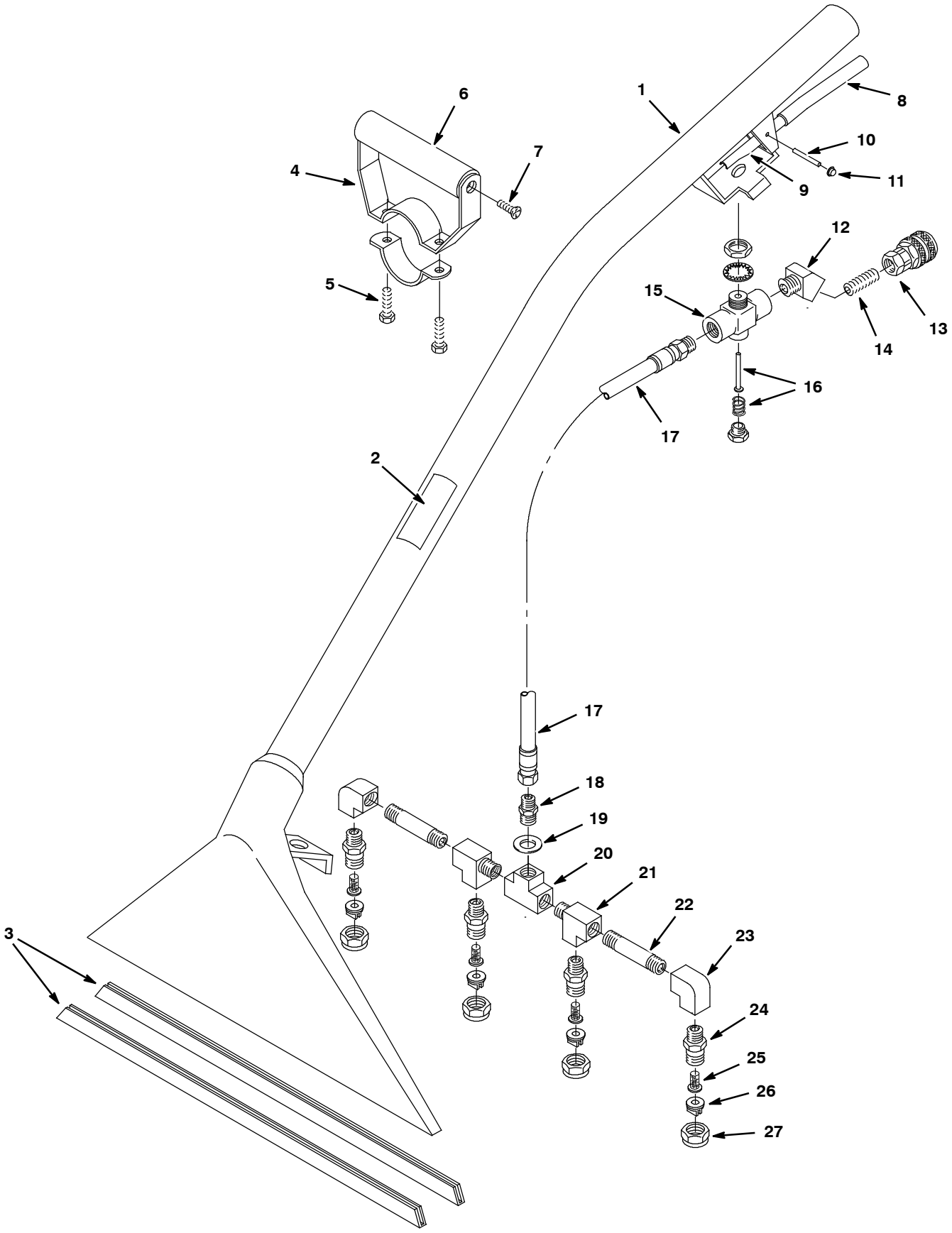

WAND GROUP, LOW PRESSURE 16 in / 406 mm

	Ref.	Part No.	Serial Number		Description	Qty.
∇		200503	(00000000-	)	Tool, Pickup, Floor, 16w [Lp Series 60]	1
▲	1	200411.BK	(00000000-	)	Tool, Pickup, Floor, 16w, Blk	1
▲	2	120846	(00000000-	)	Label, Low- Press Floor Tool	1
▲	3	200956	(00000000-	)	Plate, Floor, 16.00, Ss [Shoe]	2
▲∇	4	200927	(00000000-	)	Grip, Hand, Adj, Complt	1
▲▲	5	01697	(00000000-	)	Screw, Hex, .25- 20 X 0.62, Ss	2
▲▲	6	200912	(00000000-	)	Grip, Handle, Foam	1
▲▲	7	140834	(00000000-	)	Screw, Flt, .25- 20 X 0.62, Phl, Ss	2
▲	8	200809	(00000000-	)	Sleeve, Handle / Floor Tool	1
▲	9	200902	(00000000-	)	Handle, Valve [Imperial]	1
▲	10	140605	(00000000-	)	Pin, Handle [Imperial Eastman]	1
▲	11	140520	(00000000-	)	Nut, Push, .25id, Blk, Pl	2
▲	12	150403	(00000000-	)	Fitting, Brs, E45, Pf04/Pm04 [Taped]	1
▲	13	150913	(00000000-	)	Fitting, Brs, Qdc, Pf04 [Ser60]	1
▲	14	150615	(00000000-	)	Fitting, Brs, Str, Pm04, Close, T	1
▲∇	15	210150	(00000000-	)	Valve, Water, Flow Cntrl, Pf04/Pf04	1
▲▲	16	190603	(00000000-	)	Imperial Eastman Kit, Repair	1
▲	17	160170	(00000000-	)	Hose Assy, Wand, 47.34l[Endtoend, 42059]	1
▲	18	150606	(00000000-	)	Fitting, Brs, Str, Pm04/Pm04 X1.38l[Nip]	1
▲	19	140058	(00000000-	)	Washer, Flat, 0.54b 0.88d .06, Ss [Wand]	1
▲∇		700656	(00000000-	)	Bar Assy, Spray, 16inch, W/O Tip	1
▲▲	20	150706	(00000000-	)	Fitting, Brs, Tee, Pf04/Pf04/Pf04	1
▲▲	21	150709	(00000000-	)	Fitting, Brs, Tee, Pm04/Pf04/Pf04, Run	2
▲▲	22	150600	(00000000-	)	Fitting, Brs, Nipple, .25qm X 2.0[Taped]	2
▲▲	23	150401	(00000000-	)	Fitting, Brs, E90, Pf04/Pf04	2
▲	24	200993	(00000000-	)	Fitting, Brs, Pm04 [Spray Body]	4
▲	25	200996	(00000000-	)	Filter, Screen, 100 Mesh, Check Valve	4
▲	26	200964	(00000000-	)	Fitting, Brs, Tip [11003, T- Jet]	4
▲	27	200994	(00000000-	)	Cap, Nozzle, Spray [#8002]	4

∇ ASSEMBLY

▲ INCLUDED IN ASSEMBLY

HAND TOOL, 5 in / 127 mm

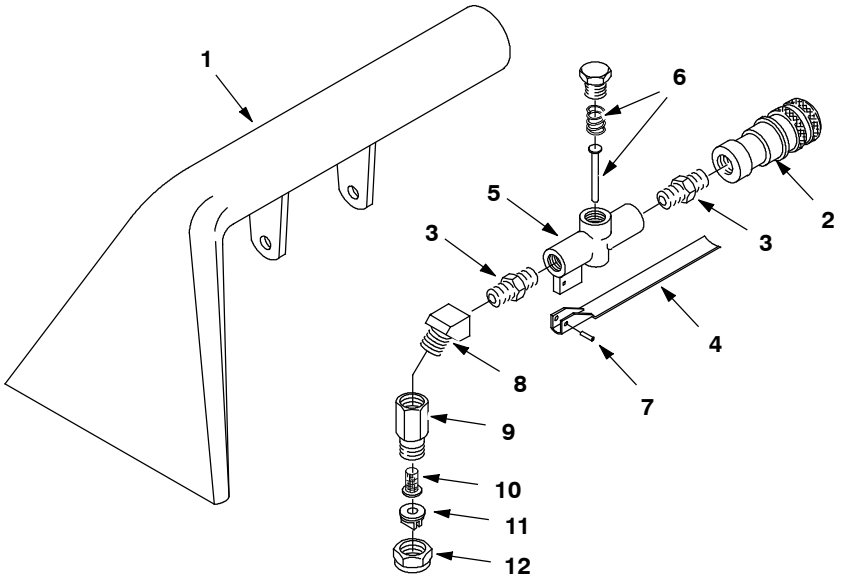

	Ref.	Part No.	Serial Number		Description	Qty.
∇		200505	(00000000-	)	Tool, Hand, 127mm 5.0w	1
▲	1	200431.BK	(00000000-	)	Tool, Hand, Blk	1
▲	2	150913	(00000000-	)	Fitting, Brs, Qdc, Pf04 [Ser60]	1
▲	3	150606	(00000000-	)	Fitting, Brs, Str, Pm04/Pm04 X1.38l[Nip]	2
▲	4	200905	(00000000-	)	Lever [K- Valve W/ Pin]	1
▲∇	5	210210	(00000000-	)	Valve, Water, Flow Cntrl, Pf04/Pf04	1
▲▲	6	190600	(00000000-	)	K- Valve Kit, Repair (No Longer Available - Replaced By 210210)	1
▲	7	140609	(00000000-	)	Pin, Roll, .187d X 0.56l, Pl	1
▲	8	150403	(00000000-	)	Fitting, Brs, E45, Pf04/Pm04 [Taped]	1
▲	9	200992	(00000000-	)	Fitting, Brs, Str, Pf02, Swivel	1
▲	10	200996	(00000000-	)	Filter, Screen, 100 Mesh, Check Valve	1
▲	11	200965	(00000000-	)	Fitting, Brs, Tip [8002, T- Jet]	1
▲	12	200994	(00000000-	)	Cap, Nozzle, Spray [#8002]	1

∇ ASSEMBLY

▲ INCLUDED IN ASSEMBLY

HAND TOOL, CREVICE 3 in / 76 mm

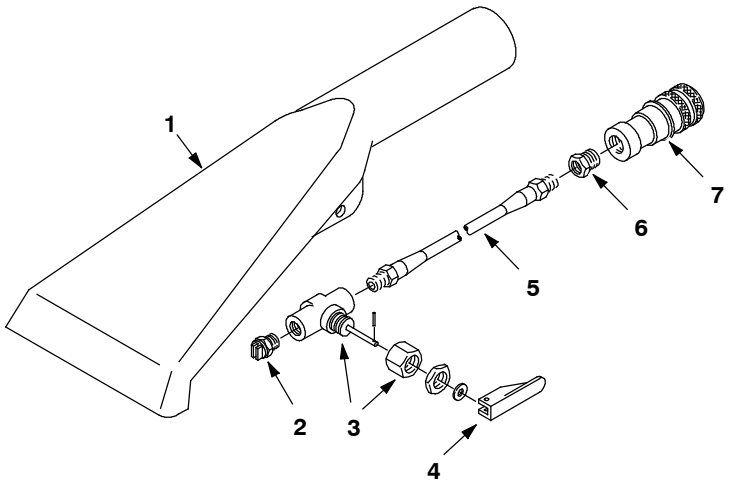

	Ref.	Part No.	Serial Number		Description	Qty.
∇		200517	(00000000-	)	Tool [Crevice Lp/Hp Series 60]	1
▲	1	200436.BK	(00000000-	)	Tool, Blk [Crevice]	1
▲	2	200975	(00000000-	)	Fitting, Brs, Jet [.125 V- Jet]	1
▲	3	210014	(00000000-	)	Valve, Water, Toggle, Pf02, W/ Nut	1
▲	4	210020	(00000000-	)	Handle, Valve [Positioner]	1
▲	5	160106	(00000000-	)	Hose, Soltn, Crevice Tool	1
▲	6	150100	(00000000-	)	Fitting, Brs, Str, Pf02/Pm04	1
▲	7	150913	(00000000-	)	Fitting, Brs, Qdc, Pf04 [Ser60]	1

∇ ASSEMBLY

▲ INCLUDED IN ASSEMBLY

HAND TOOL, UPHOLSTERY, LOW PRESSURE

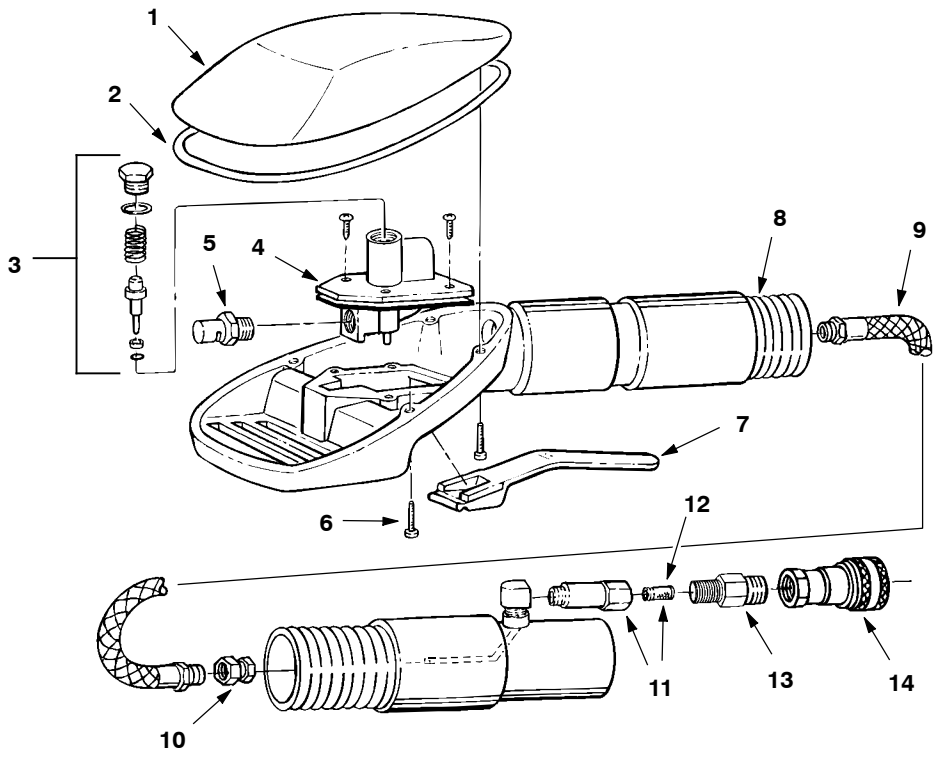

	Ref.	Part No.	Serial Number		Description	Qty.
∇		200540	(00000000-	)	Tool [Upholstery Lp Series 60]	1
▲	1	200845	(00000000-	)	Cover, Tool [Upholstery]	1
▲	2	200843	(00000000-	)	Gasket, Cover	1
▲	3	190631	(00000000-	)	Service Kit [Upholstery, Lp]	1
▲	4	210226	(00000000-	)	Valve, Water, Solenoid, 120vac Low Press	1
▲	5	200991	(00000000-	)	Fitting, Ss, Jet, 1/8k- Jet	1
▲	6	200838	(00000000-	)	Screw, #06- 32 X 0.75	4
▲	7	200840	(00000000-	)	Trigger Upholstery Tool	1
▲	8	200844	(00000000-	)	Hose, Vacuum [Upholstery Tool W/O Cuffs]	1
▲	9	200837	(00000000-	)	Hose [Hp Upholstery Tool]	1
▲	10	200848	(00000000-	)	Fitting, Brs [3 Pcs]	1
▲	11	200842	(00000000-	)	Filter, In- Line, Complt	1
▲	12	200841	(00000000-	)	Screen, Fltr, Inline	1
▲	13	150606	(00000000-	)	Fitting, Brs, Str, Pm04/Pm04 X1.38l[Nip]	1
▲	14	150913	(00000000-	)	Fitting, Brs, Qdc, Pf04 [Ser60]	1

∇ ASSEMBLY

▲ INCLUDED IN ASSEMBLY

HOSES, SOLUTION AND VACUUM GROUP

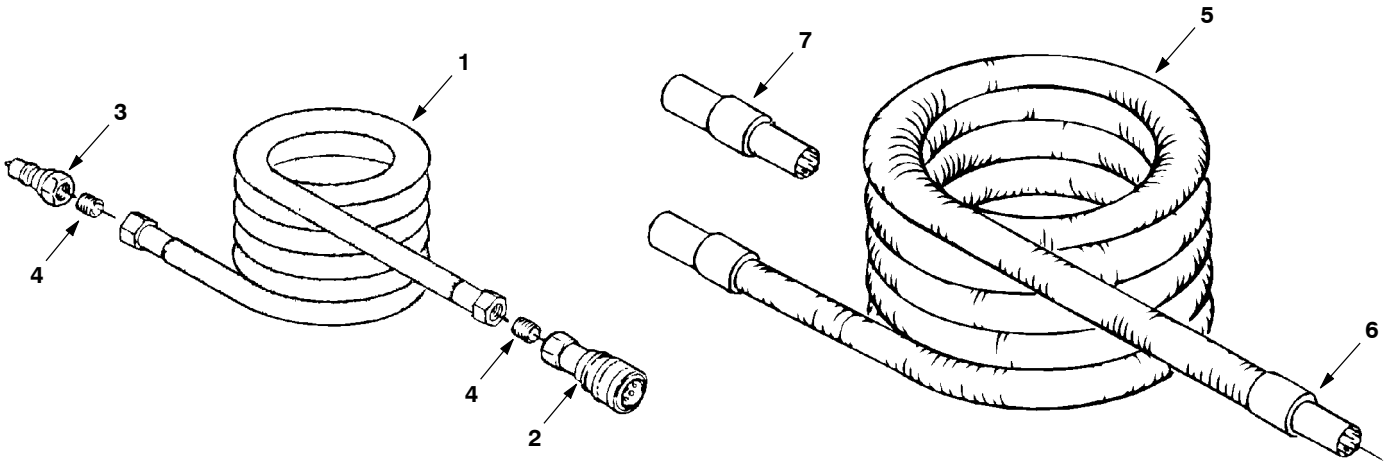

	Ref.	Part No.	Serial Number		Description	Qty.
∇	1	1073341	(00000000-	)	Hose Assy, .38id X 15ft, Qdc/Qm [Ser60] (Optional)	1
∇	1	160186	(00000000-	)	Hose, Soltn, .38id X 25ft [Series 60,Lp] (Standard)	1
∇	1	160187	(00000000-	)	Hose, Soltn, .38id X 50ft [Series 60,Lp] (Optional)	1
▲	2	150913	(00000000-	)	Fitting, Brs, Qdc, Pf04 [Ser60]	1
▲	3	150933	(00000000-	)	Fitting, Brs, Qdc, Pm04 [Ser60]	1
▲	4	150615	(00000000-	)	Fitting, Brs, Str, Pm04, Close, T	2
∇	5	160400	(00000000-	)	Hose, Vacuum, 1.50id X 15ft (Optional)	1
∇	5	160401	(00000000-	)	Hose Kit, Vacuum, 1.50id X 25ft, 2cuff (Standard)	1
∇	5	160402	(00000000-	)	Hose, Vacuum, 1.50id X 50ft (Optional)	1
▲	6	160430	(00000000-	)	Cuff, 1.5d Hose, 1.5id	2
	7	12694	(00000000-	)	Fitting, Plstc, Str, Bm24/Bm24	1
	N/S	220040	(00000000-	)	Bag, Hose, Accssry, 24x36[W/Draw String] (Optional)	1

∇ ASSEMBLY

▲ INCLUDED IN ASSEMBLY

SPRAYER GROUP

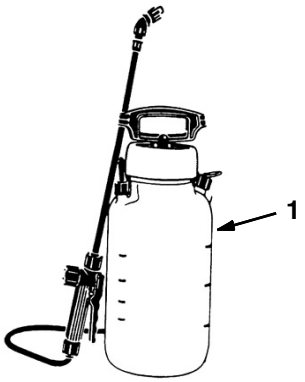

Ref.	Part No.	Serial Number		Description	Qty.
1	605848	(00000000-	)	Sprayer 2gal Pumpup Hd	1

FLASHING LIGHT KIT

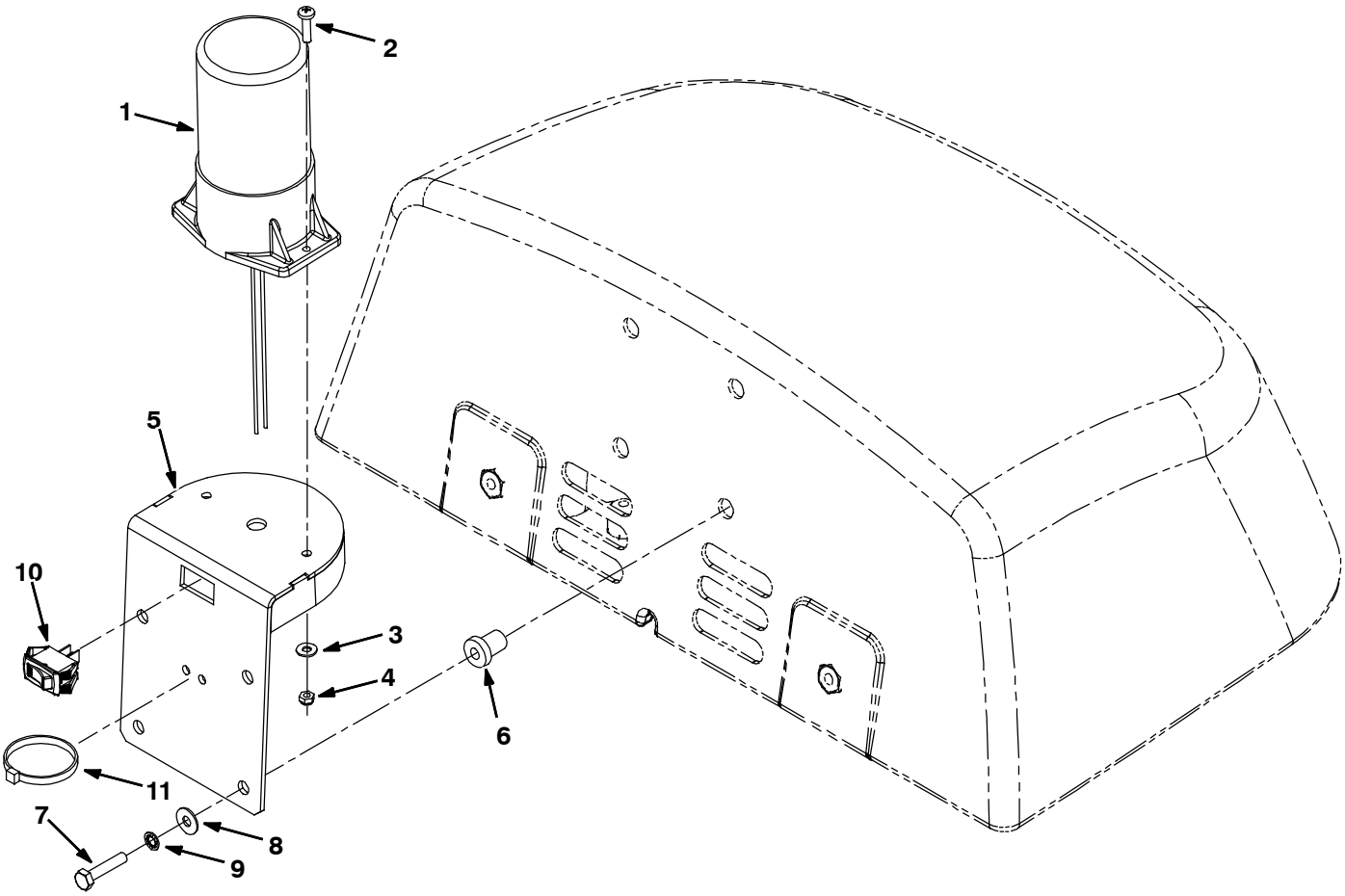

	Ref.	Part No.	Serial Number		Description	Qty.
∇		9000581	(00000000-	)	Light Kit, Flsh, Ci [T7/Ssr]	1
▲	1	1014564	(00000000-	)	Light, Strobe, 12- 80vdc, 4watt	1
▲	2	24196	(00000000-	)	Screw, Pan, M5 X 0.8 X 20, Ss	2
▲	3	01683	(00000000-	)	Washer, Flat, #10, Ss	2
▲	4	09739	(00000000-	)	Nut, Hex, Lock, M5 X 0.80, Nl, Ss	2
▲	5	1014527	(00000000-	)	Bracket Wldt, Light, Flsh	1
▲	6	61913	(00000000-	)	Nut, Isolator, .25- 20 Wall Th .031- .187	4
▲	7	01699	(00000000-	)	Screw, Hex, .25- 20 X 1.25, Ss	4
▲	8	01684	(00000000-	)	Washer, Flat, 0.25, Ss	4
▲	9	07515	(00000000-	)	Washer, Lock, Int, 0.25, Ss	4
▲	10	130717	(00000000-	)	Switch, Rocker, Spst On- Off	1
▲	11	130040	(00000000-	)	Tie, Cable, Nyl, 06.0l .12w	1

∇ ASSEMBLY

▲ INCLUDED IN ASSEMBLY

BASKET KIT

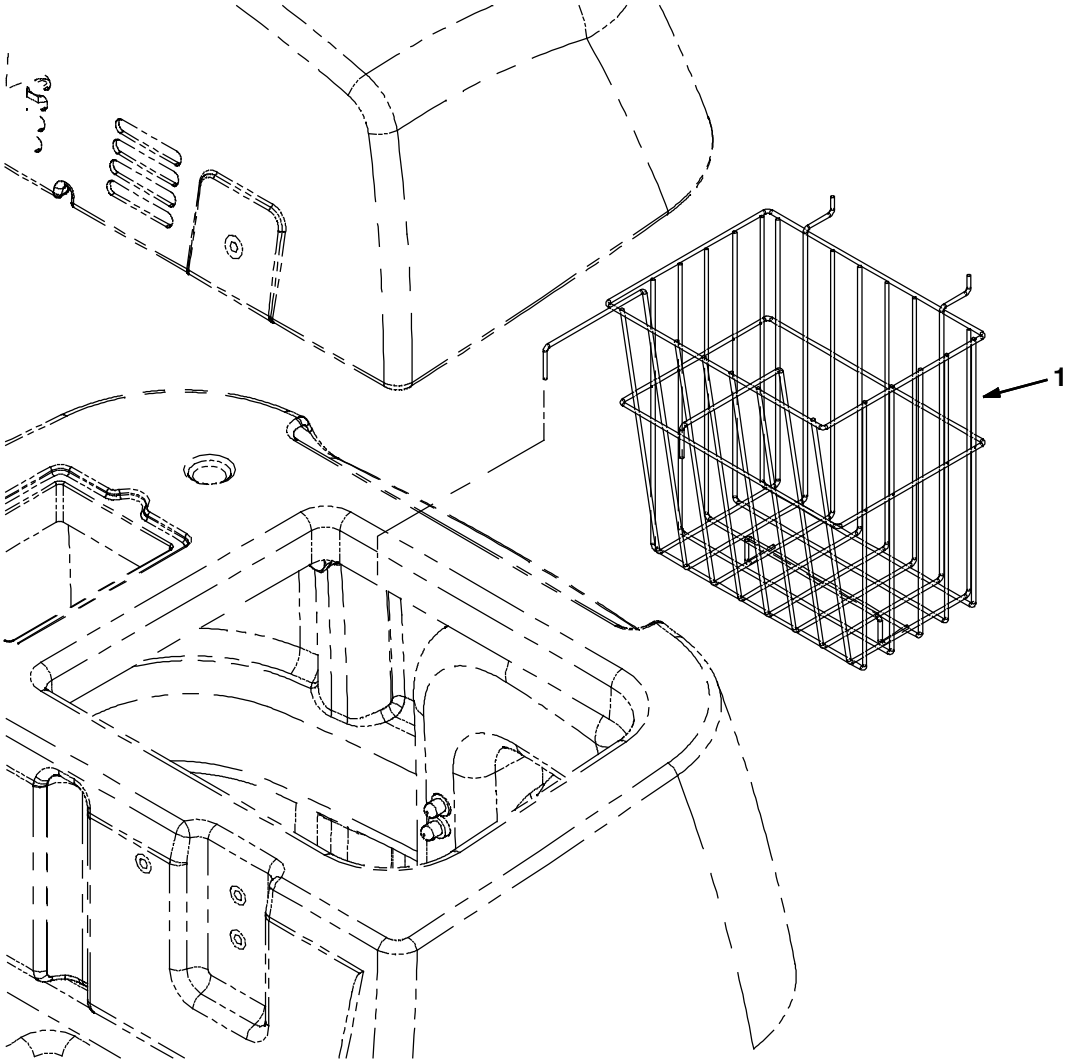

Ref.	Part No.	Serial Number	Description	Qty.
1	9001004	(00000000-)	Basket Kit, Ci	1

SEATBELT KIT

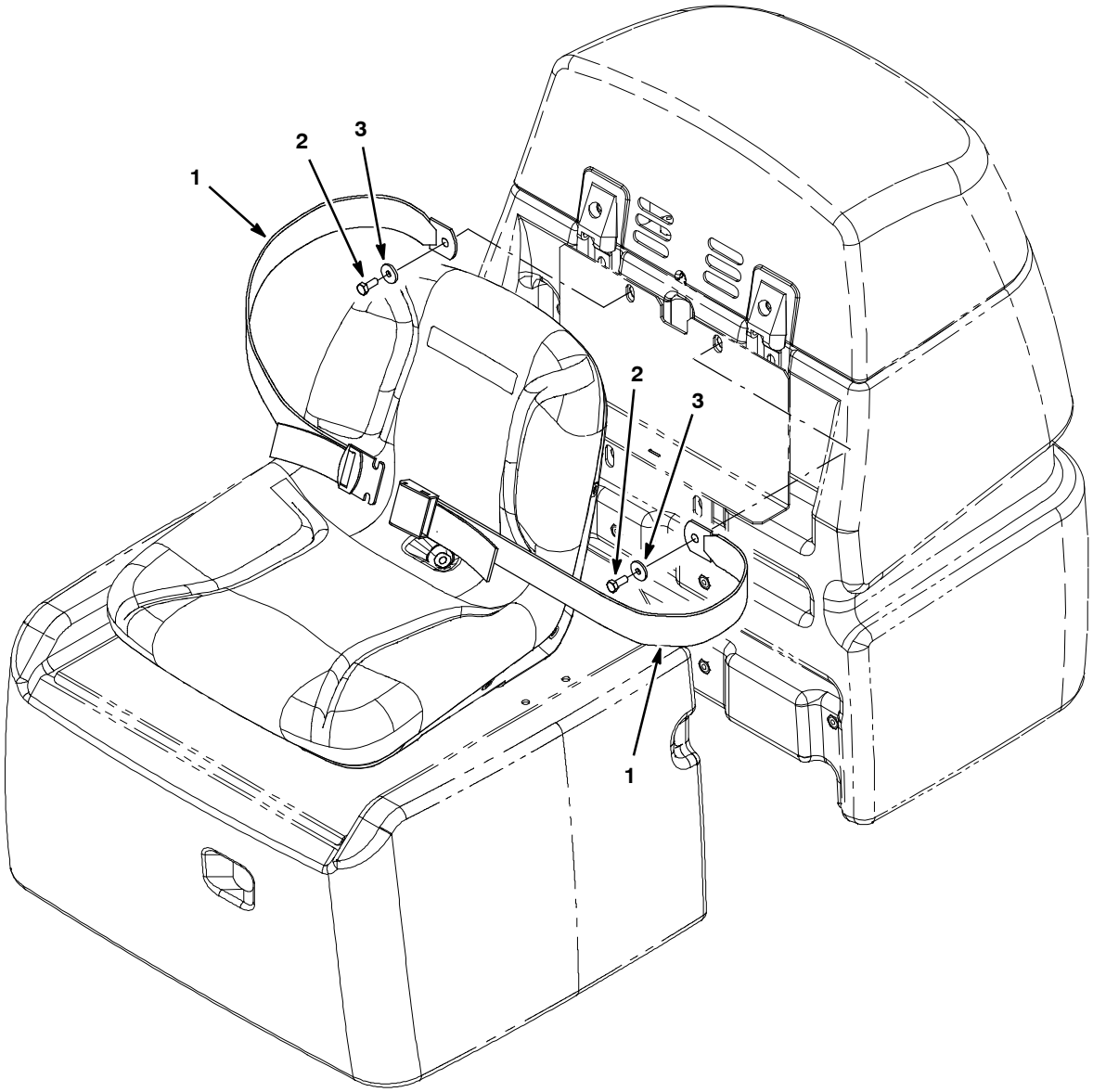

	Ref.	Part No.	Serial Number		Description	Qty.
∇		9018668	(00000000-	)	Seatbelt Kit, Ci [T7/Ssr/R14/Striverider	1
▲	1	30533	(00000000-	)	Seatbelt, 60.0l, Orange	1
▲	2	09010	(00000000-	)	Screw, Hex, M8 X 1.25 X 25, Ss	2
▲	3	1017218	(00000000-	)	Washer, Flat, 0.32b 1.00d .12, Ss	2

∇ ASSEMBLY

▲ INCLUDED IN ASSEMBLY

DOCUMENTATION GROUP

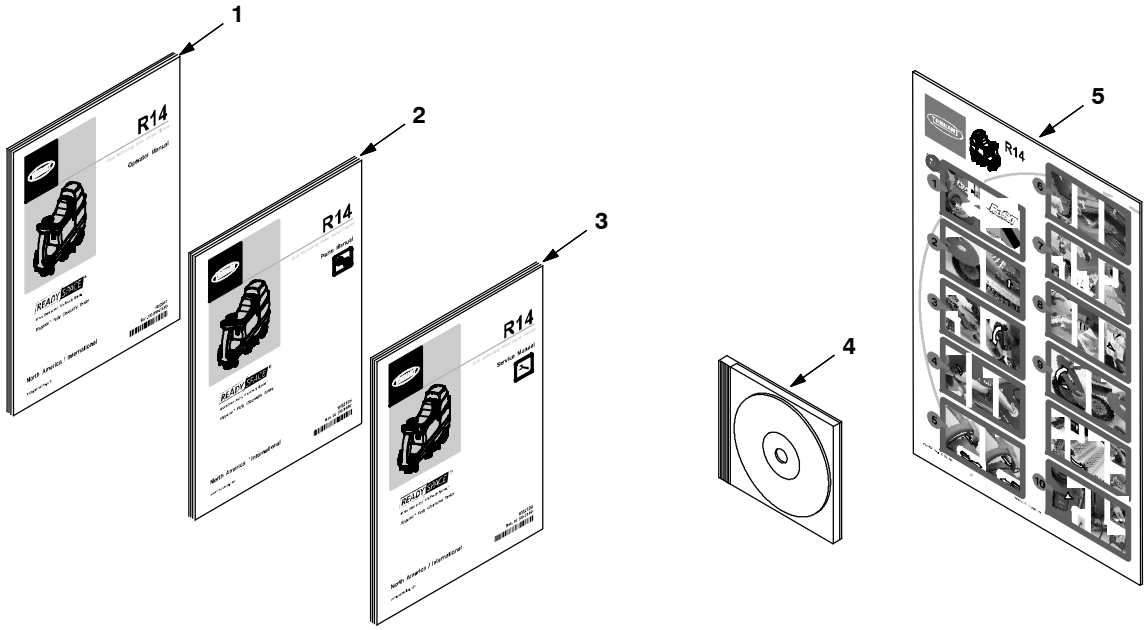

Ref.	Part No.	Serial Number	Description	Qty.
1	1032047	(00000000-)	Manual, Oprtr [R14, En] (English)	1
1	1032123	(00000000-)	Manual, Oprtr [R14, Es] (Spanish)	1
1	1032124	(00000000-)	Manual, Oprtr [R14, Fr] (French)	1
1	9021481	(00000000-)	Manual, Oprtr [R14 Jp] (Japanese)	1
1	9021482	(00000000-)	Manual, Oprtr [R14 Ko] (Korean)	1
2	1032125	(00000000-)	Manual, Parts [R14]	1
3	1032129	(00000000-)	Manual, Service [R14]	1
4	1026544	(00000000-)	Manual, Cd- Rom, Training [Interactive]	1
5	1032126	(00000000-)	Instr, Use & Care, En [R14]	1

To view, print, order, download the latest Parts manual, other language Operator manuals, and Use and Care Guides (wall charts), visit:

www.tennantco.com/manuals

STEERING CONTROL BREAKDOWN, 1019724

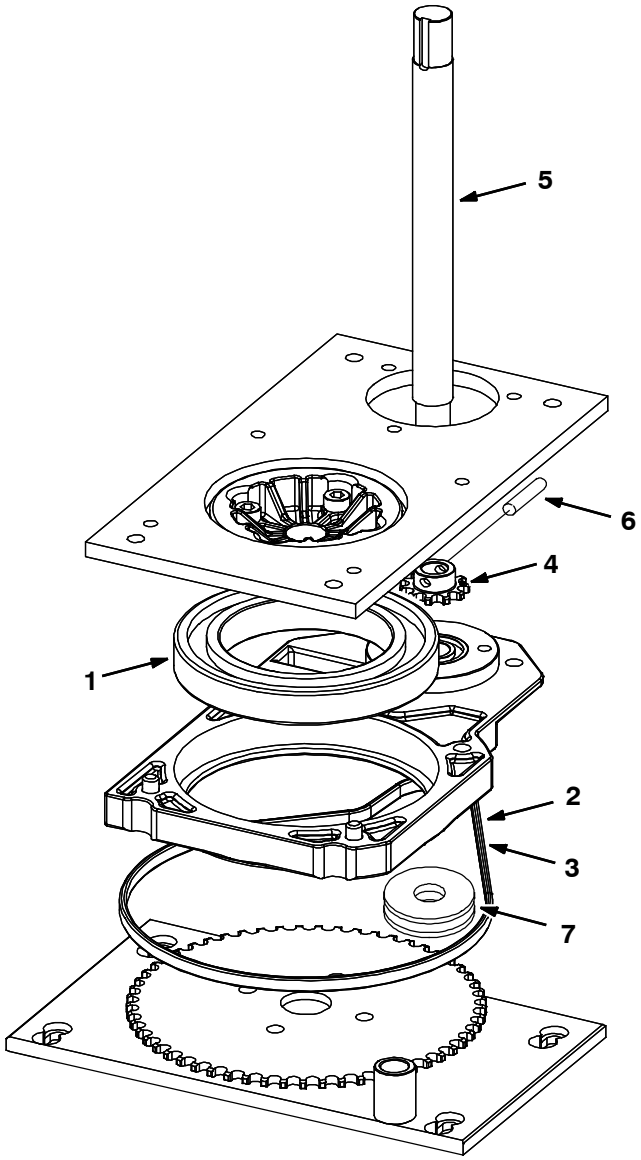

	Ref.	Part No.	Serial Number	Description	Qty.
∇		1019724	(00000000-)	Steer- Control Assy, Wheel Drive	1
▲	1	372874	(00000000-)	Vr, Bearing, Steering	1
▲	2	372875	(00000000-)	Vr, Chain, Steering	1
▲	3	372876	(00000000-)	Vr, Link, Master	1
▲	4	372881	(00000000-)	Vr, Sprocket	1
▲	5	1029229	(00000000-)	Shaft, Steering	1
▲	6	1038313	(00000000-)	Pin, Roll, 06Mm X 28MmL	1
▲	7	9011051	(00000000-)	Vr, Pulley, Tens	1

∇ ASSEMBLY

▲ INCLUDED IN ASSEMBLY

FRONT DRIVE WHEEL GEARBOX BREAKDOWN, 9003021

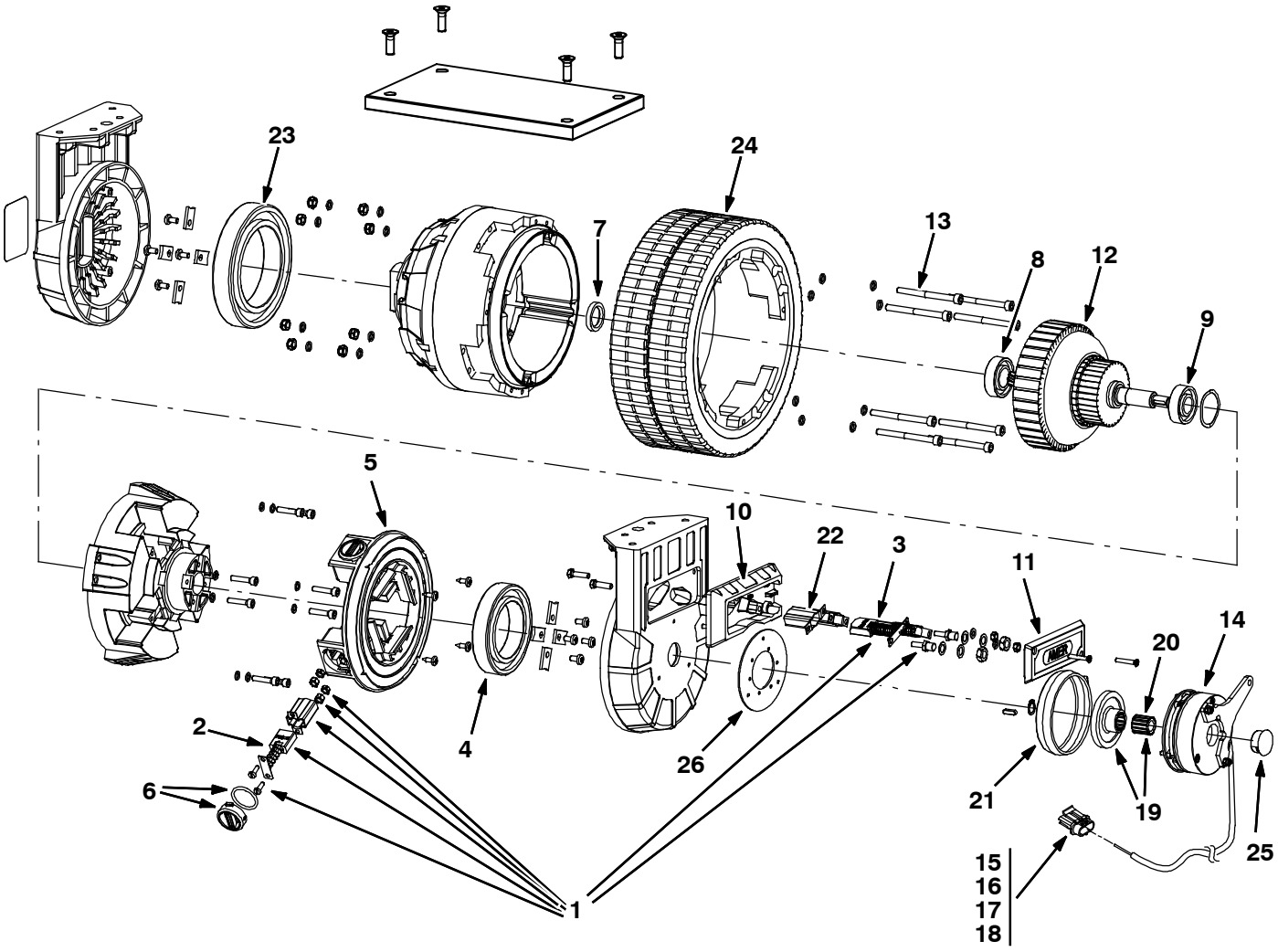

FRONT DRIVE WHEEL GEARBOX BREAKDOWN, 9003021

	Ref.	Part No.	Serial Number	Description	Qty.
∇		9003021	(00000000-)	Gearbox Kit, Wheel, 250mm, W/Connector	1
▲	1	1034379	(00000000-)	Brush Kit, Motor [Amer, 1pick=1bag] (1 Kit = 6 Brushes)	1
▲∇	2	1034382	(00000000-)	Brush Kit, Carbon (1 Kit = 4 Brushes)	1
▲▲	2	1029224	(00000000-)	Vr, Brush, Carbon [1 Pc]	4
▲∇	3	1034383	(00000000-)	Brush Kit, Carbon Curve (1 Kit = 2 Brushes)	1
▲▲	3	1034410	(00000000-)	Vr, Brush, Carbon [Curved] (1 Brush)	2
▲	4	1029227	(00000000-)	Vr, Bearing, Ball, Brush Side	1
▲	5	1034385	(00000000-)	Ring, Brsh Holder, Afmkt	1
▲	6	391262	(00000000-)	Brush Kit, Cover [Amer]	4
▲	7	391263	(00000000-)	Seal, Ring [Amer]	1
▲	8	391264	(00000000-)	Bearing, Gearbox Side [Amer]	1
▲	9	391265	(00000000-)	Bearing, Motor Side [Amer]	1
▲	10	391467	(00000000-)	Box, Ele, Connection	1
▲	11	391468	(00000000-)	Cover, Ele, Connection	11
▲	12	1034384	(00000000-)	Armature	1
▲	13	1034386	(00000000-)	Screws, Wheel Mount, Afmkt	8
▲∇	14	9008896	(00000000-)	Brake Kit, W/Connector	1
▲▲	15	78950	(00000000-)	Connector, Fem, 02cav, Mp280 Sealed	2
▲▲	16	78952	(00000000-)	Lock, Secondary, 2cav, Mp280 Sealed	2
▲▲	17	25837	(00000000-)	Terminal, Fem, Mp280, Sealed, 22- 20ga	2
▲▲	18	25830	(00000000-)	Seal, Wire, 14ga [Wp / Mp280 Sealed]	2
▲▲	19	372870	(00000000-)	Disc, Brake (Set Includes Spline)	1
▲▲	20	372871	(00000000-)	Adapter, Brake, Spl (NLA - Replaced By Set 372870)	1
▲	21	372872	(00000000-)	Sleeve, Rbr	1
▲	22	372877	(00000000-)	Guide, Brushholder, Slip Ring [Amer	1
▲	23	372874	(00000000-)	Bearing, Steering	1
▲	24	391259	(00000000-)	Tire, Solid, 250mm X 90mm Red (Standard)	1
▲	25	130161	(00000000-)	Plug, Hole, Rnd, 0.88d, Blk	1
▲	26	9010971	(00000000-)	Vr, Flange, Brake, T7	1

∇ ASSEMBLY

▲ INCLUDED IN ASSEMBLY

PUMP BREAKDOWN, 1022343

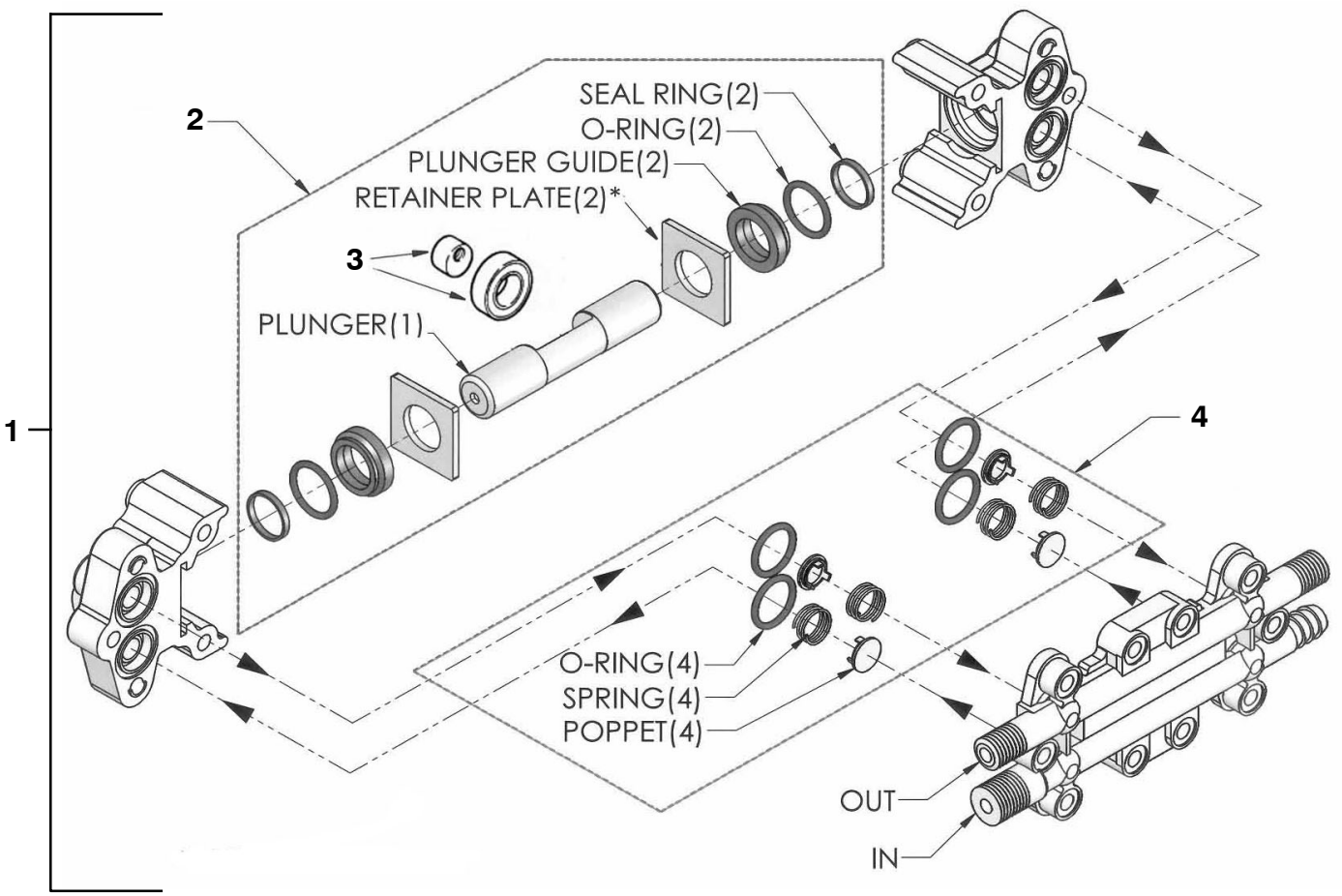

* Not Included with kit 9002989

	Ref.	Part No.	Serial Number		Description	Qty.
∇		1022343	(00000000-	)	Pump, Water, 24vdc, 2.0gpm 250psi (Complete)	1
▲		1034052	(00000000-	)	Motor, 24vdc, Pump, Replmt [R14]	1
▲∇	1	1034050	(00000000-	)	Head, Pump, Replmt [R14] (Includes Retainer Plates Qty 2, Plunger & Seal Kit 9002989 and Valve Kit 9002988)	1
▲▲	2	9002989	(00000000-	)	Plunger & Seal Kit, Replmt [R14]	1
▲	3	1034051	(00000000-	)	Bearing, Cam, 100in Offset, Replmt [R14] (Not Included in Kit 1034050)	1
▲▲	4	9002988	(00000000-	)	Valve Kit, W/ Org, Replmt [R14]	1

∇ ASSEMBLY

▲ INCLUDED IN ASSEMBLY