V-WD-27

Wet/Dry Vacuum

Parts Manual

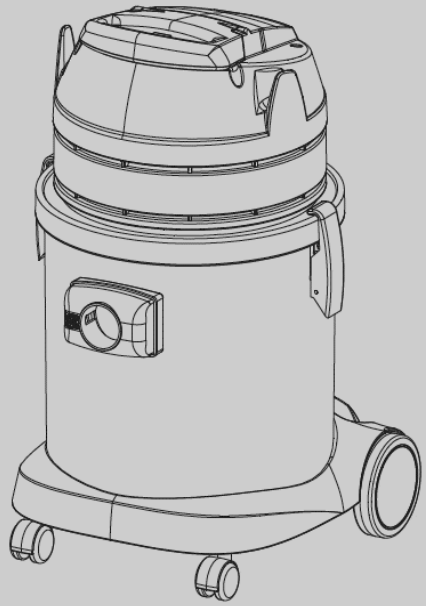

Model Part No.:
1244330 V-WD-27 [220-240V EU]
1244331 V-WD-27 [220-240V UK]
1244333 V-WD-27 [220-240V ANZ]
1244332 V-WD-27 [220-240V CN]
1244334 V-WD-27 [100V JP]

Tennant*True*® Parts

To view, print or download the parts manual, visit:

www.tennantco.com/manuals

9018762
Rev. 00 (03-2019)

Home

Only use TENNANT Company supplied or equivalent parts.
Parts and supplies may be ordered online, by phone or from any Tennant or Nobles Authorized Service Center or Distributor.

Before Ordering any parts or supplies, be sure to have the machine model number and serial number available.

Tennant Company
PO Box 1452
Minneapolis, MN 55440 USA
Phone: (800) 553-8033
www.tennantco.com

Tennant Company N.V.
Industrielaan 6 5405 AB
P.O. Box 6 5400 AA
Uden- The Netherlands
europe@tennantco.com
www.tennantco.com

TENNANT Cleaning Systems & Equipment (Shanghai) Co., Ltd
Building 1, No. 3777 Caoying Road
Qingpu Shanghai, China 201712
Phone: 86 21 6922 5333
Fax: 86 21 69225151
www.tennant.co.cn

TENNANT Company Japan
9F Industry & Trade Center
2 Yamashita- cho, Naka- ku
Yokohama, Kanagawa 231- 0023
Japan
Phone: 81-45-640-5630
Fax: 81-45-640-5604
www.tennant.co.jp

Specifications and parts are subject to change without notice.
Copyright ©2019 TENNANT Company

TABLE OF CONTENTS

HEAD ASSEMBLY (EU/UK/CN/ANZ 220-240V MODELS) 4
HEAD ASSSEMBLY (JAPAN 100V MODEL) 8
MAIN FILTER ASSEMBLY 10
TANK ASSEMBLY 11
TROLLEY ASSEMLBY 11
ACCESSORY TOOLS 12
OPTIONAL DRY VACUUM ACCESSORIES 13
LABEL KIT 13
ELECTRICAL DIAGRAM 14

RECOMMENDED SPARE PARTS LIST

VACUUM BAGS AND FILTERS	
KTRI05847	BAG, VACUUM, PAPER [1 PKG = 10 BAGS]
KTRI05848	BAG, VACUUM, MICROFIBER [1 PKG = 10 BAGS]
KTRI05853	FILTER KIT, VACUUM [220-240V MODEL]
KTRI05849	FILTER KIT, VACUUM [100V MODEL]
KTRI05800	FILTER KIT, VACUUM, PRE-FILTER
CLEANING TOOL ACCESSORIES	
1064248	HANDLE, VACUUM HOSE W/ REG, Ø36 MM
KTRI05819	HOSE ASSY, VACUUM
1064249	WAND SET, EXTN, PLST, 36MM [2 PCS]
KTRI05680	TOOL KIT, VACUUM [CREVICE TOOL, ROUND BRUSH TOOL AND FURNITURE TOOL]
KTRI05818	TOOL, FLOOR, DRY
1064333	TOOL, FLOOR, WET
KTRI05924	TOOL, CREVICE, 35 cm, 36 mm [OPTIONAL]
KTRI05925	TOOL, CREVICE, 60 cm, 36 mm [OPTIONAL]
OPTIONAL HEPA FILTER	
KTRI05808	FILTER KIT, CATRIDGE, HEPA W/RING & GASKET
KTRI05801	FILTER, CARTRIDGE, HEPA
KTRI05839	RING, FASTENER, PLASTIC
GENERAL MAINTENANCE PARTS	
1021687	CASTER KIT, VACUUM [QTY 2]
KTRI05679	WHEEL KIT, REAR
KTRI05678	LATCH KIT, VACUUM [QTY 2]
1021646	SWITCH, ON/OFF
KTRI05850	FLOAT KIT, BASKET
KTRI05674	CORD KIT, POWER, 220-240V [EU]
KTRI05683	CORD KIT, POWER, 220-240V [UK]
KTRI05695	CORD KIT, POWER, 220-240V [ANZ]
KTRI05706	CORD KIT, POWER, 220-240V [CN]
KTRI05696	CORD KIT, POWER, 100V [JP]
KTRI05675	MOTOR KIT, VACUUM, 1000W, 220-240VAC
KTRI05709	MOTOR KIT, VACUUM, 1000W, 100VAC [JPN]
KTRI05676	GASKET KIT, MOTOR 220-240VAC
KTRI05613	GASKET KIT, MOTOR 100VAC [JPN]

HEAD ASSEMBLY (EU/UK/CN/ANZ 220-240V MODELS)

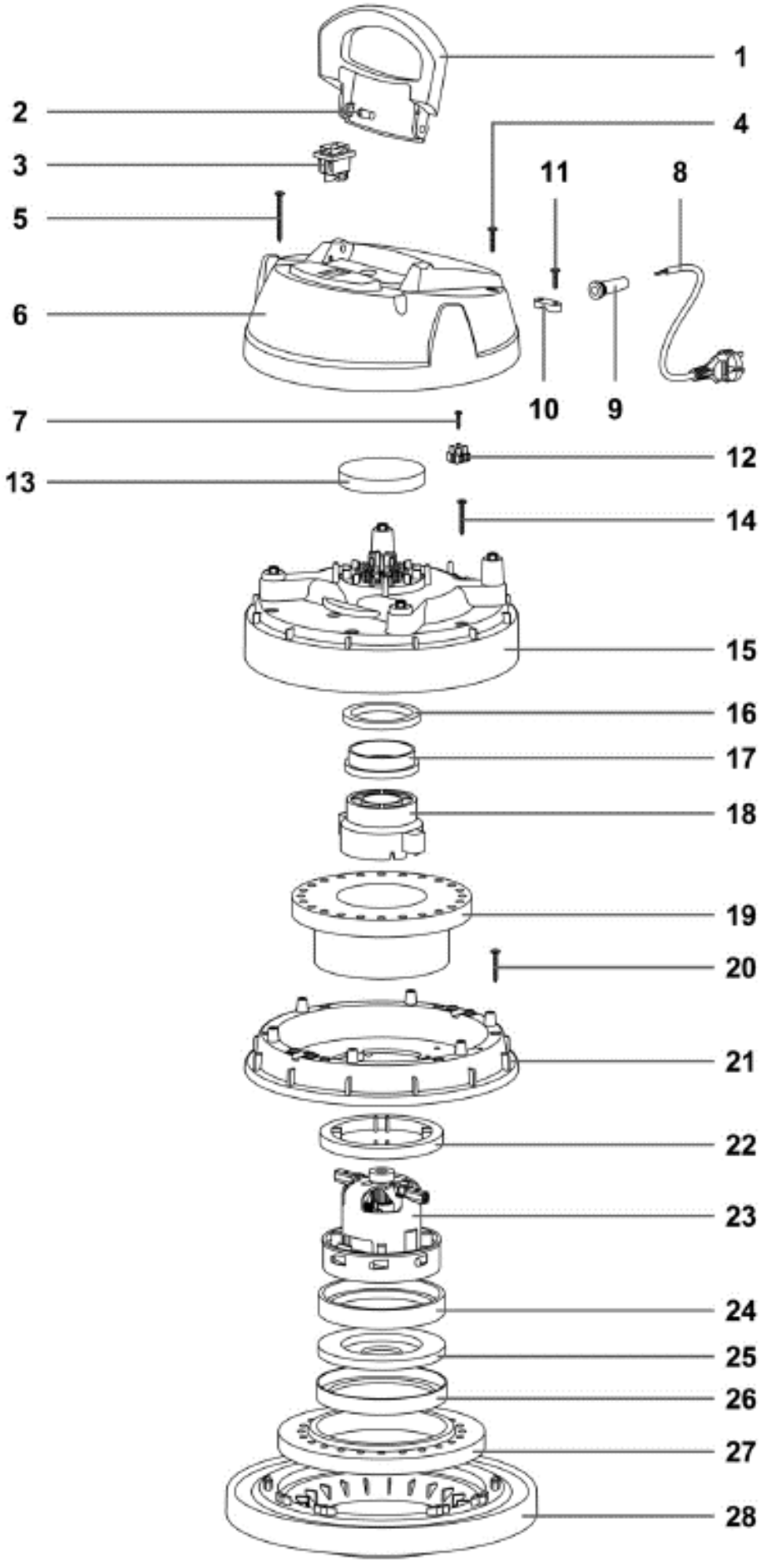

HEAD ASSEMBLY (EU/UK/CN/ANZ 220-240V MODELS)

		Code	Part No.	Description	QTY
▽			KTRI05723	HOUSING ASSY, POWER, HEAD [V-WD-27 EU]	1
▽			KTRI05724	HOUSING ASSY, POWER, HEAD [V-WD-27 UK]	1
▽			KTRI05725	HOUSING ASSY, POWER, HEAD [V-WD-27 CN]	1
▽			KTRI05726	HOUSING ASSY, POWER, HEAD [V-WD-27 ANZ]	1
▲	▽		KTRI05672	COVER KIT, VACUUM, TEAL [V-WD-27]	1
▲	▲	1	N/A	HANDLE VEGAS GRIGIO 5500	1
▲	▲	2	N/A	HANDLE PIN VEGAS	2
▲		3	1021646	SWITCH, ON/OFF	1
▲	▲	4	N/A	SCREW PFU TMT PHL 5X25 ZN BLACK	2
▲	▲	5	1021710	SCREW PAT TMT PHL 5X55 BLACK	2
▲	▲	6	N/A	COVER VEGAS 500 BL-TEN	1
▲	▽		KTRI05673	TERMINAL KIT, W/WIRES [220-240V]	1
▲	▲	7	N/A	SCREW VITE TC PZ 4,2X16 ZN NERA	1
▲	▲	12	1021629	TERMINAL, BLOCK	1
▲	▽		KTRI05674	CORD KIT, POWER, 220-240V **[EU]**	1
▲	▲	8	N/A	ELECTRIC CORD 2X1 MT.8,5	1
▲	▲	9	1021625	LEAD	1
▲	▲	10	1021626	BLOCK, STRAINRELIEF	1
▲	▲	11	1021628	SCREW PFU TMT PHL 5X20 BLACK	1
▲	▽		KTRI05683	CORD KIT, POWER, 220-240V **[UK]**	1
▲	▲	8	N/A	ELECTRIC CORD 2X1 MT.8,5 GB BLACK	1
▲	▲	9	1021625	LEAD	1
▲	▲	10	1021626	BLOCK, STRAINRELIEF	1
▲	▲	11	1021628	SCREW PFU TMT PHL 5X20 BLACK	1
▲	▽		KTRI05706	CORD KIT, POWER 220-240V **[CN]**	1
▲	▲	8	N/A	ELECTRIC CORD 2X1 MT.8,5 CHINA	1
▲	▲	9	1021625	LEAD	1
▲	▲	10	1021626	BLOCK, STRAINRELIEF	1
▲	▲	11	1021628	SCREW PFU TMT PHL 5X20 BLACK	1
▲	▽		KTRI05695	CORD KIT, POWER, 220-240V **[ANZ]**	1
▲	▲	8	N/A	ELECTRIC CORD 2X1 MT.8,5 AUS	1
▲	▲	9	1021625	LEAD	1
▲	▲	10	1021626	BLOCK, STRAINRELIEF	1
▲	▲	11	1021628	SCREW PFU TMT PHL 5X20 BLACK	1
▲		13	1021647	FILTER	1
▲		14	1021648	SCREW PAT TMT PHL 5X35 BLACK	6
▲		15	1021650	LID, MIDDLE, TEAL	1
▲		16	1021651	WASHER H8 D85X65	1
▲	▽		KTRI05675	MOTOR KIT, VACUUM, 1000W, 220-240VAC	1
▲	▲	18	N/A	CAP /ADAPTER F/MOT.BYPASS AU	1
▲	▲	23	N/A	MOTOR BS282 WL 1000W 220-240	1
▲	▲	NS	N/A	CAVETTO C.420-GR-FF-FF48	1
▲	▲	NS	N/A	CAVETTO C.430 MOT-TP GR-FF-FF4.8	1
▲	▲	NS	N/A	CLAMP (NOT SHOWN)	1

Continued on next page

▽ KIT

▲ INCLUDED IN KIT

N/A = NOT AVAILABLE SEPARATELY - MUST ORDER KIT

HEAD ASSEMBLY (EU/UK/CN/ANZ 220-240V MODELS) - Continued

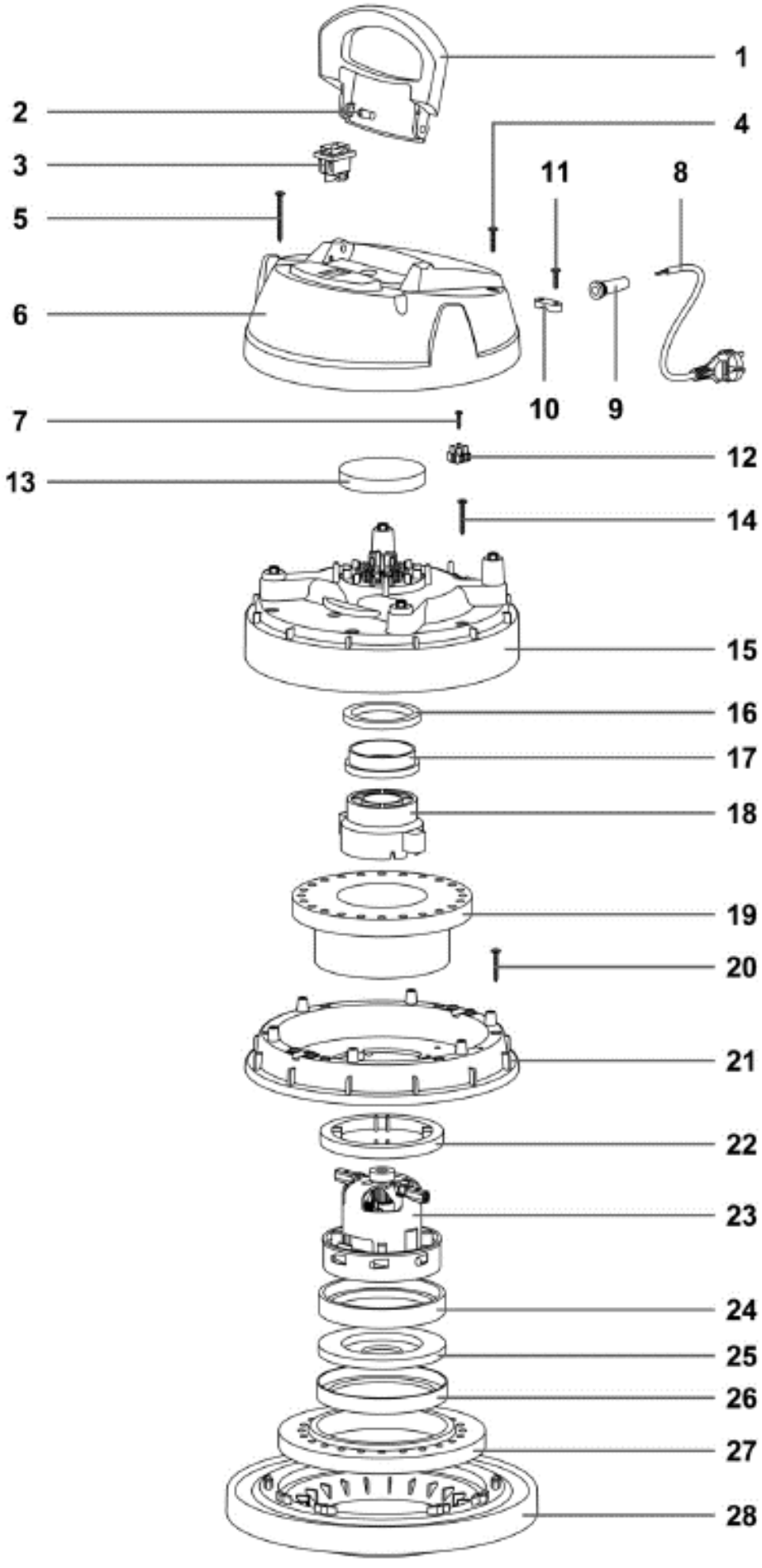

HEAD ASSEMBLY (EU/UK/CN/ANZ 220-240V MODELS) - Continued

	Code	Part No.	Description	QTY
▲ ▽		KTRI05676	GASKET KIT, MOTOR 220-240VAC	1
▲ ▲	17	1021652	SPACER, MOTOR	1
▲ ▲	19	1021653	DAMPER, SOUND	1
▲ ▲	22	N/A	"C" GASKET D.130	1
▲ ▲	24	N/A	L-GASKET D.130 H=9	1
▲ ▲	25	N/A	OUTDISTANCED SINGLE-STAGE H=13MM	1
▲ ▲	26	1021657	RING, BOTTOM, MOTOR	1
▲ ▲	27	1021659	RING, BOTTOM	1
▲	20	1021648	SCREW PAT TMT PHL 5X35 BLACK	6
▲	21	N/A	MOTOR FASTENER 08 X MOT.WL BL-TEN	1
▲	28	N/A	BASE 500 MONOST.W/GASKE GR5500	1
▲	NS	1021628	SCREW PFU TMT PHL 5X20 BLACK	4
▲	NS	N/A	LABEL, SAFETY, READ MANUAL [CE]	1
▲	NS	N/A	LABEL, LOGO, TENNANT	1

▽ KIT

▲ INCLUDED IN KIT

N/A = NOT AVAILABLE SEPARATELY - MUST ORDER KIT

HEAD ASSEMBLY (JAPAN 100V MODEL)

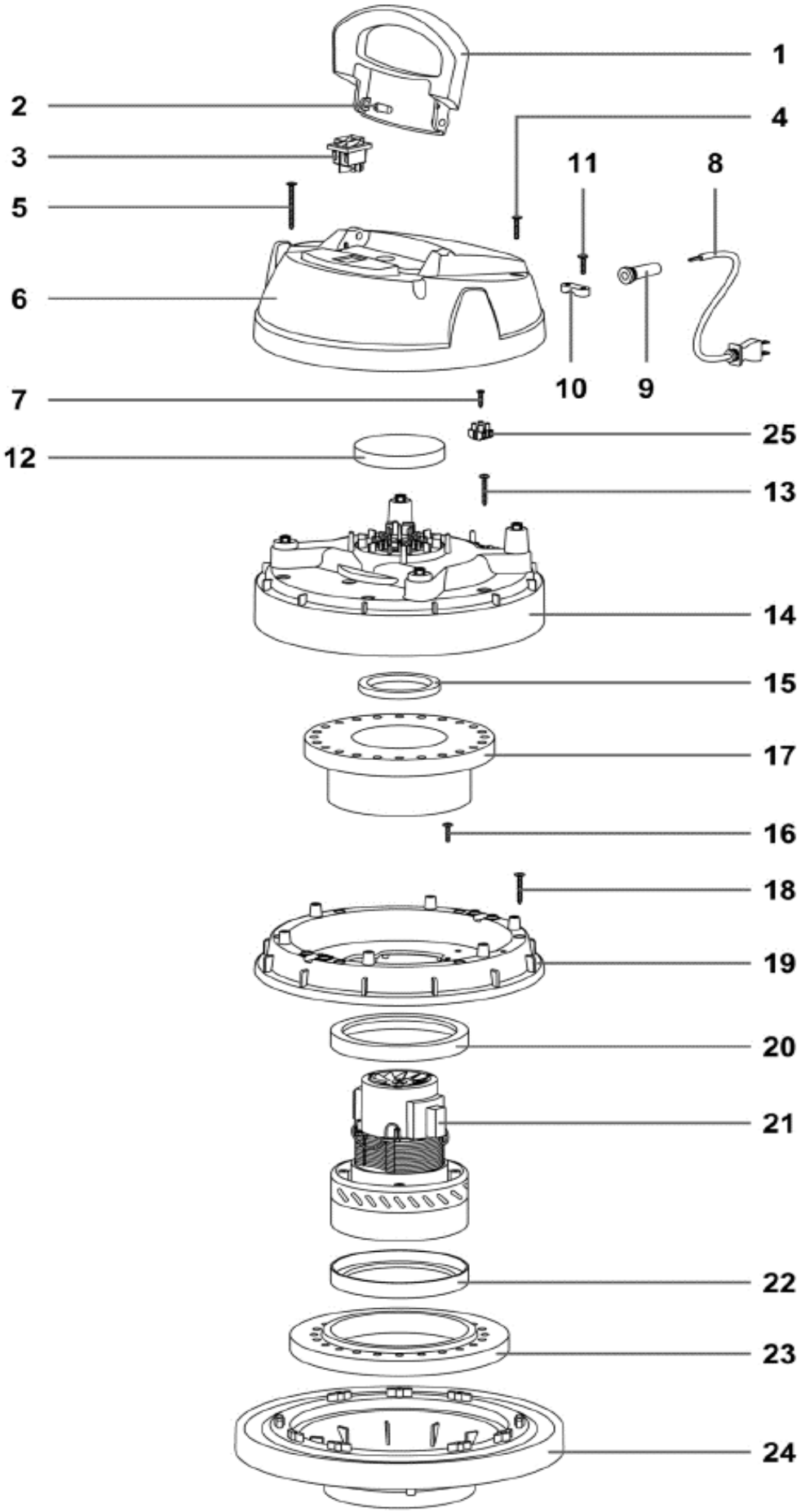

HEAD ASSEMBLY (JAPAN 100V MODEL)

		Code	Part No.	Description	QTY
▽			KTRI05727	HOUSING ASSY, POWER, HEAD [V-WD-27 JPN]	1
▲	▽		KTRI05672	COVER KIT, VACUUM, TEAL [V-WD-27]	1
▲	▲	1	N/A	HANDLE VEGAS GRIGIO 5500	1
▲	▲	2	N/A	HANDLE PIN VEGAS	2
▲		3	1021646	SWITCH, ON/OFF	1
▲	▲	4	N/A	SCREW PFU TMT PHL 5X25 ZN BLACK	2
▲	▲	5	1021710	SCREW PAT TMT PHL 5X55 BLACK	2
▲	▲	6	N/A	COVER VEGAS 500 BL-TEN	1
▲	▽		KTRI05682	TERMINAL KIT, W/WIRES [JPN]	1
▲	▲	7	1021717	SCREW VITE TC PZ 4,2X16 ZN NERA	1
▲	▲	25	N/A	TERMINAL, BLOCK	1
▲	▽		KTRI05696	CORD KIT, POWER, 100VAC [JPN]	1
▲	▲	8	N/A	ELECTRIC CORD 2X1,25 MT.8,5 JPN	1
▲	▲	9	1021625	LEAD	1
▲	▲	10	1021626	BLOCK, STRAINRELIEF	1
▲	▲	11	1021628	SCREW PFU TMT PHL 5X20 BLACK	1
▲		12	1021647	FILTER	1
▲		13	1021648	SCREW PAT TMT PHL 5X35 BLACK	6
▲		14	1021650	LID, MIDDLE, TEAL	1
▲		15	1021651	WASHER H8 D85X65	1
▲	▽		KTRI05709	MOTOR KIT, VACUUM, 1000W, 100VAC [JPN]	1
▲	▲	21	N/A	MOTOR BD382 1000W 100 50/60	1
▲	▲	NS	N/A	CABLAGGIO 40CM MOTORE POKE-IN	1
▲	▲	NS	N/A	CLAMP (NOT SHOWN)	1
▲	▽		KTRI05613	GASKET KIT, MOTOR 100VAC [JPN]	1
▲	▲	17	1021653	DAMPER, SOUND	1
▲	▲	20	1021657	RING, BOTTOM, MOTOR	2
▲	▲	22	1021657	RING, BOTTOM, MOTOR	2
▲	▲	23	1021659	RING, BOTTOM	1
▲		16	1021628	SCREW PFU TMT PHL 5X20 BLACK	4
▲		18	1021648	SCREW PAT TMT PHL 5X35 BLACK	6
▲		19	N/A	MOTOR FASTNER MOT 100V	1
▲		24	N/A	BASE 500 GASKE GR5500 MOT 100V	1
▲		NS	N/A	LABEL, SAFETY, READ MANUAL [CE]	1
▲		NS	N/A	LABEL, LOGO, TENNANT	1

▽ KIT

▲ INCLUDED IN KIT

N/A = NOT AVAILABLE SEPARATELY - MUST ORDER KIT

MAIN FILTER ASSEMBLY

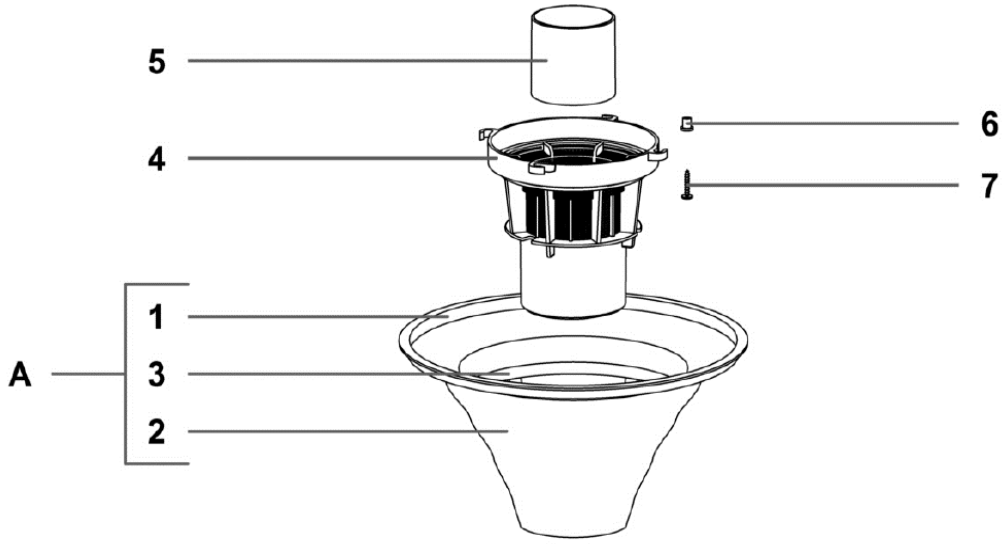

	Code	Part No.	Description	QTY
▽	A	KTRI05853	FILTER KIT, VACUUM [220-240V MODEL]	1
▲	1	N/A	FILTER RING 500	1
▲	2	N/A	FILTER POLY AN3-500 CON REG H180	1
▲	3	1021668	BASKET, CLOTH, FILTER	1
▽	A	KTR05849	FILTER KIT, VACUUM [100V MODEL]	1
▲	1	N/A	FILTER RING 500	1
▲	2	N/A	FILTER POLY AN3-500 CON REG H230	1
▲	3	1021668	CONICAL BASKET 300	1
▽		KTRI05850	FLOAT KIT, BASKET	1
▲	4	N/A	NET ANTIFOAM BODY HIGH	1
▲	5	1021666	FLOAT	1
▲	6	1021661	SPACER	4
▲	7	1021663	SCREW PAT TMT PHL 5X25	4

▽ KIT

▲ INCLUDED IN KIT

N/A = NOT AVAILABLE SEPARATELY - MUST ORDER KIT

TANK ASSEMBLY

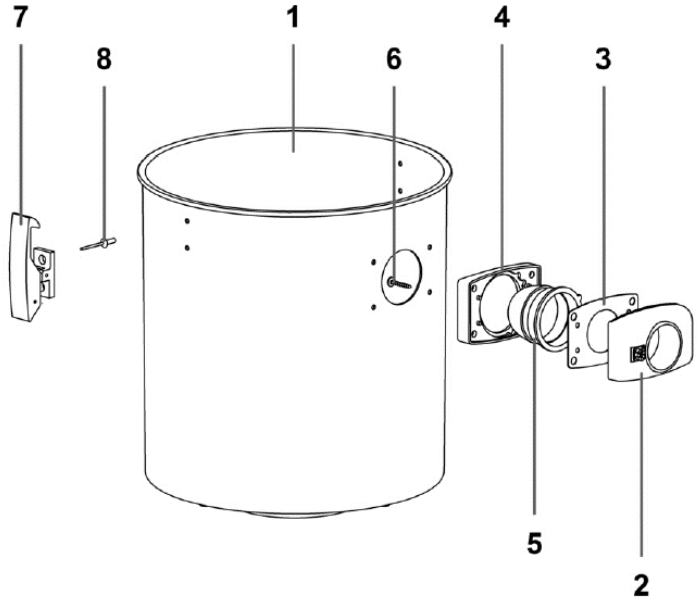

		Code	Part No.	Description	QTY
▽			KTRI05729	TANK KIT, VACUUM [V-WD-27 COMPLETE ASSY]	1
▲		1	N/A	DRUM PL 500/27W C/Q NE	1
▲	▽		KTRI05677	FITTING KIT, HOSE, INLET	1
▲	▲	2	N/A	COMP.INLET R155 BLACK W/YELL.SWITCH	1
▲	▲	3	1021675	GASKET	1
▲	▲	4	N/A	GASKET R 205 BLACK	1
▲	▲	5	1021685	INLET, TANK	1
▲	▲	6	1021640	SCREW PAT TMT PHL 5X30 BLACK	4
▲	▽		KTRI05678	LATCH KIT, VACUUM [QTY 2]	1
▲	▲	7	N/A	HOOK PLAST.COMPL. GI-VAC	2
▲	▲	8	N/A	RIVET 4,8X17	4
▲		NS	N/A	LABEL, MODEL [V-WD-27]	2

TROLLEY ASSEMBLY

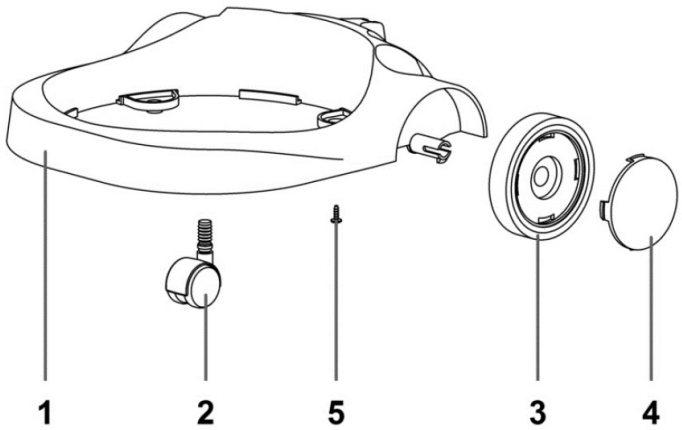

		Code	Part No.	Description	QTY
▽			KTRI05816	TROLLEY KIT, VACUUM [V-WD-27]	1
▲		1	N/A	TROLLEY BODY 500 VEGAS BL	1
▲		2	1021687	CASTER, SWIVEL	2
▲	▽		KTRI05679	WHEEL KIT, REAR	1
▲	▲	3	N/A	WHEEL BODY YES	2
▲	▲	4	N/A	WHEEL COVERING YES BLACK	2
▲		5	1021706	SCREW PAT TMT PHL 5X14 ZN BLACK	4

▽ KIT

▲ INCLUDED IN KIT

N/A = NOT AVAILABLE SEPARATELY - MUST ORDER KIT

ACCESSORY TOOLS

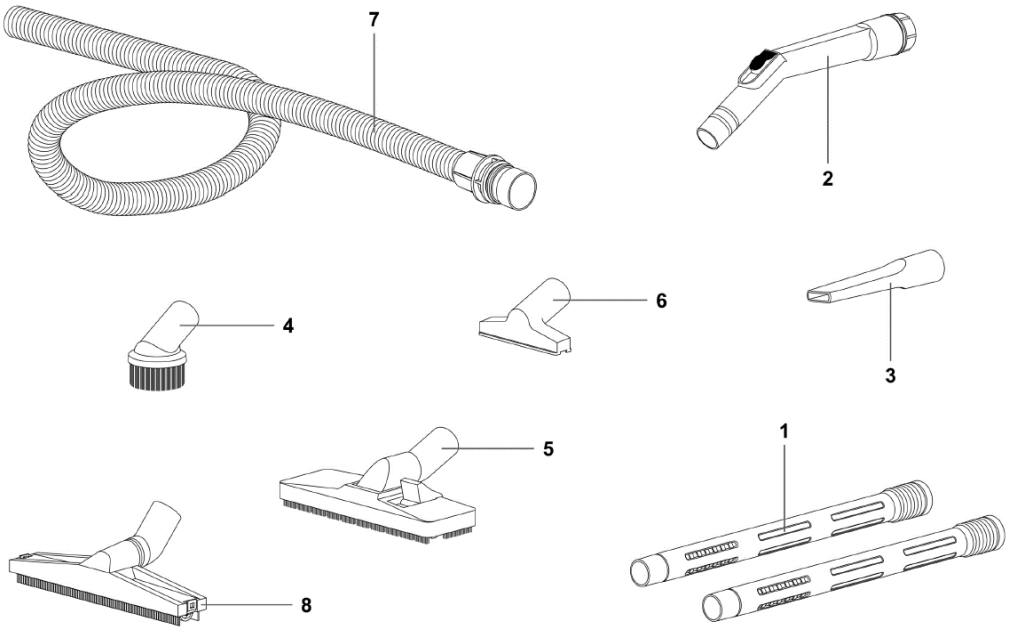

	Code	Part No.	Description	QTY
	1	KTRI05785	WAND SET, EXTN, PLST, 36MM [2 PCS]	2
	2	1064248	HANDLE, VACUUM HOSE W/ REG, Ø36 MM	1
▽		KTRI05680	TOOL KIT, VACUUM	1
▲	3	N/A	TOOL, CREVICE, 36MM	1
▲	4	N/A	TOOL, BRUSH, ROUND, 36MM	1
▲	6	N/A	TOOL, SMALL, 36MM	1
	5	KTRI05818	TOOL, FLOOR, DRY	1
	7	KTRI05819	HOSE ASSY, VACUUM	1
	8	1064333	TOOL, FLOOR, WET	1

▽ KIT

▲ INCLUDED IN KIT

N/A = NOT AVAILABLE SEPARATELY - MUST ORDER KIT

OPTIONAL DRY VACUUM ACCESSORIES



	Code	Part No.	Description	Qty
	1	KTRI05847	BAG, VACUUM, PAPER [1 PKG = 10 BAGS]	1
	2	KTRI05848	BAG, VACUUM, MICROFIBER [1 PKG=10 BAGS]	1
	3	KTRI05800	FILTER, VACUUM, PRE-FILTER	1
▽		KTRI05808	FILTER KIT, CARTRIDGE, HEPA W/RING & GASKET	1
▲	4	KTRI05801	FILTER, CARTRIDGE, HEPA	1
▲	5	KTRI05839	RING, FASTENER, PLASTIC	1
▲	6	N/A	GASKET H3	1
	7	KTRI05924	TOOL, CREVICE, 35 cm, 36 mm	1
	8	KTRI05925	TOOL, CREVICE, 60 cm, 36 mm	1

▽ KIT

▲ INCLUDED IN KIT

N/A = NOT AVAILABLE SEPARATELY - MUST ORDER KIT

LABEL KIT



	Code	Part No.	Description	QTY
▽		KTRI05681	LABEL KIT, VACUUM [V-WD-27]	1
▲	1	N/A	LABEL, LOGO, TENNANT	1
▲	2	N/A	LABEL, SAFETY, READ MANUAL [CE]	1
▲	3	N/A	LABEL, MODEL [V-WD-27]	2

▽ KIT

▲ INCLUDED IN KIT

N/A = NOT AVAILABLE SEPARATELY - MUST ORDER KIT

ELECTRICAL DIAGRAMS

EU/UK/CN/ANZ 220-240V MODELS

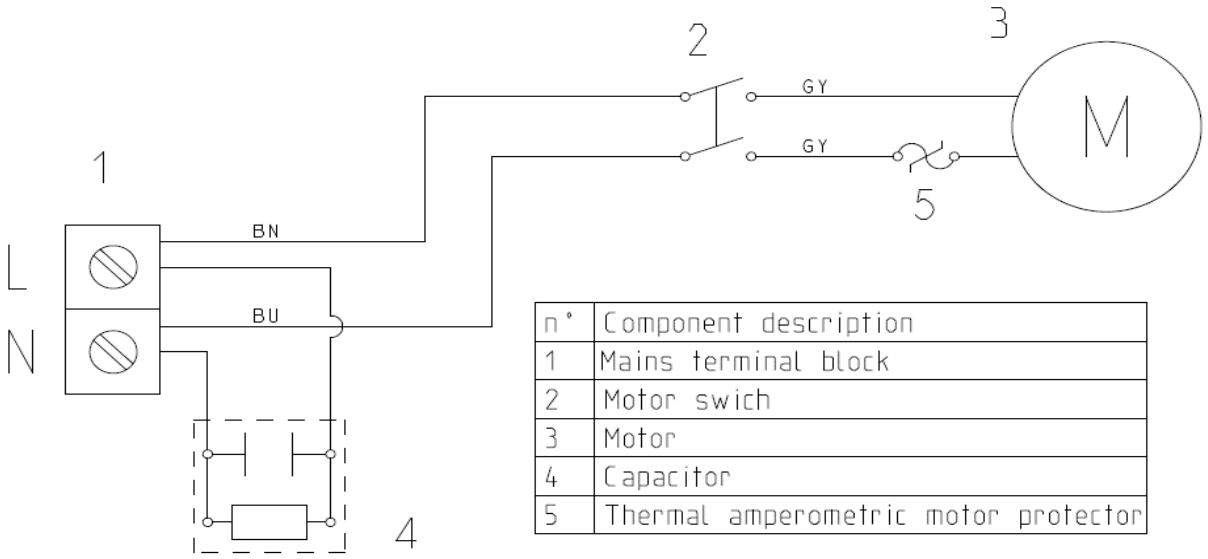

n°	Component description
1	Mains terminal block
2	Motor swich
3	Motor
4	Capacitor
5	Thermal amperometric motor protector

JAPAN 100V MODEL

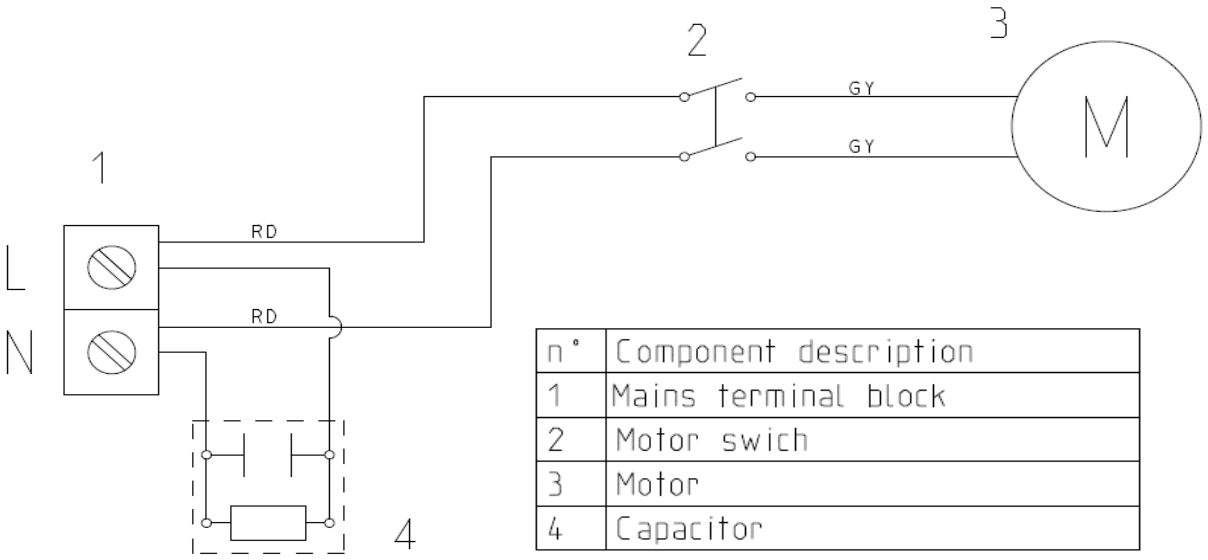

n°	Component description
1	Mains terminal block
2	Motor swich
3	Motor
4	Capacitor